U.S. Department
of Transportation
Federal Aviation
Administration

Advisory Circular

Subject: INSTALLATION OF THERMAL/ACOUSTIC INSULATION FOR BURNTHROUGH PROTECTION

Date: 7/29/08
Initiated by: ANM-115

AC No: 25.856-2A
Change:

1. PURPOSE. This AC provides guidance for the test method to determine burnthrough resistance of thermal/acoustic insulation materials installed in transport category airplanes. This guidance applies to airplanes required to comply with § 25.856 and part VII of Appendix F to 14 CFR part 25.

2. APPLICABLITY.

a. The guidance provided in this document is directed to airplane manufacturers, modifiers, foreign regulatory authorities, and Federal Aviation Administration (FAA) transport airplane type certification engineers and their designees.

b. This material is neither mandatory nor regulatory in nature and does not constitute a regulation. It describes acceptable means, but not the only means, for demonstrating compliance with the applicable regulations. The FAA will consider other methods of demonstrating compliance that an applicant may elect to present. While these guidelines are not mandatory, they are derived from extensive FAA and industry experience in determining compliance with the relevant regulations. On the other hand, if we become aware of circumstances that convince us that following this AC would not result in compliance with the applicable regulations, we will not be bound by the terms of this AC, and we may require additional substantiation or design changes as a basis for finding compliance.

c. This material does not change, create any additional, authorize changes in, or permit deviations from, regulatory requirements.

3. CANCELLATION. This AC cancels AC 25.856-2, Installation of Thermal/Acoustic Insulation For Burnthrough Protection, dated 1/17/06.

4. RELATED REGULATIONS AND DOCUMENTS.

a. 14 CFR 25.856 and part VII of Appendix F to 14 CFR part 25.

b. Advisory Circular (AC) 25.856-1, "Thermal/Acoustic Insulation Flame Propagation Test Method Details." You can download an electronic copy of AC 25.856-1 from the Internet at http://rgl.faa.gov. You may order a paper copy from the U.S. Department of Transportation, Subsequent Distribution Office, M-30, Ardmore East business Center, 3341 Q 75th Avenue, Landover, MD 20795.

5. BACKGROUND.

a. Accidents have illustrated the threat that exists due to fuel spillage from damaged aircraft fuel tanks that result in pool fires that penetrate into the cabin. Research has shown that the aluminum skin currently in use offers little opportunity to prevent burnthrough. Thermal/acoustic insulation having the appropriate fire resistant properties and installed in a controlled manner, however, can delay the onset of fire into the cabin for a sufficient length of time to allow passenger evacuation. The installation methods and materials are critical in deriving the benefit of fire resistant thermal/acoustic insulation.

b. Amendment 25-111 (68 FR 45046, July 31, 2003) introduced a new test method and requirement into part 25 that improves the fire penetration resistance of thermal/acoustic insulation. This AC provides guidance on the installation details and techniques that have been found to be acceptable to realize the full potential of materials having satisfactory fire-resistant properties. Since the primary threat from pool fires is to the lower half of the fuselage, the regulation applies only to the lower half (see paragraph 7e of this AC). The installation criteria specified in this AC are applicable to thermal/acoustic insulation installed in that area; however, use of similar techniques throughout the airplane may be desirable for consistency.

c. The guidance in this AC is mainly directed at insulation systems consisting of a batting encapsulated by a moisture barrier. The insulation is installed by mechanically fixing it to the airframe structure. The guidance in this AC may be inappropriate or not applicable to certain materials and/or installation systems. Where doubt exists as to the relevance of the criteria specified to any particular installation system, perform testing on a burnthrough test rig configured to be representative of a fuselage exposed to a pool fire. See paragraph 8 of this AC for further discussion of this issue.

d. The test method in Appendix F, part VII to part 25 is stringent, and requires that all samples meet the pass/fail criteria specified. As with any stringent test method, there may occasionally be a statistically predictable failure of a material that, as a rule, satisfies the criteria. In order to address this situation without permanently banning this material from use, the

following is an acceptable procedure to address a sample failure. To use the following procedure, only one of the three original sample sets may fail. Note that use of this procedure does require that the test be run longer than 4 minutes, in order that the average burnthrough time be at least 4 minutes.

(1) Test a fourth sample set and average the burnthrough time results of all four tests. If the average exceeds 4 minutes, the material may be used, provided the fourth sample passes the test.

(2) If the fourth sample set should also fail the test, it is acceptable to test an additional two sample sets (for a total of 6) and average the results. If four of the six sample sets pass the test, *and* the average burnthrough time of all six tests exceeds 4 min, the material can be used.

(3) Consider using materials from more than one lot/batch to make the additional test samples.

e. Section 25.856(b) applies to thermal acoustic insulation that would contribute to post crash fire safety. This regulation has a specific provision that excludes from the compliance requirement "thermal/acoustic insulation installations that the FAA finds would not contribute to fire penetration resistance." The FAA has reviewed numerous installation concepts and established common applications of this provision. These are discussed in paragraph 9 of this AC.

6. EXPLANATION OF TERMS.

a. Burnthrough. The penetration of an external fire into the airplane cabin, typically through the airplane skin, insulation, and sidewall or floor structure. For the purposes of the test, a breach of 0.25" or more in diameter is considered burnthrough.

b. Overlap. The length of insulation material that presents a double thickness of material either against the airplane skin, for the purposes of joining two bags, or abutting airframe structure other than the fuselage skin (see figure 1).

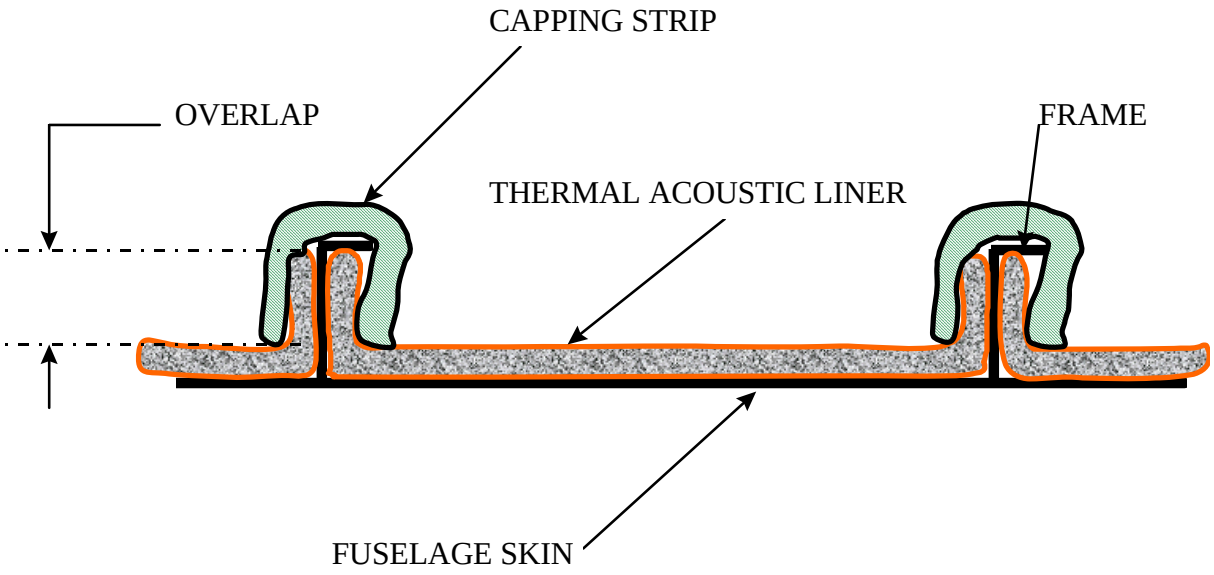

Figure 1. Overlap

c. Pool Fire. An extensive ground fire originating from fuel spillage from damaged airplane fuel tanks.

d. Thermal/Acoustic Liner. Any materials (for example, a blanket) that are used to thermally or acoustically insulate the interior of the airplane. These materials are typically installed onto the airplane skin or other structure and can form a barrier between the passenger cabin and an external fire. Thermal/acoustic liners consisting of batting encapsulated by a moisture barrier may be known as "bags."

e. Field Blanket: Thermal/acoustic liner positioned between structural members (frames, for example) and typically fastened on the liner's periphery.

f. Lower Half: The area of the fuselage below the horizontal line that bisects the cross section of the fuselage. This may be determined using the height of the fuselage as a basis.

7. INSTALLATION OF THERMAL/ACOUSTIC INSULATION.

a. General. As noted previously, the method of installation is very important in realizing the benefits of improved materials. To date, numerous thermal/acoustic insulation materials have been successfully tested. These materials can be classified into three basic categories: batting systems, barrier systems, and encapsulating systems.

(1) A batting system incorporates a more fire-resistant material to either partially, or fully, replace the industry-standard fiberglass material. In some instances, the system may contain layers of both improved and standard materials.

(2) A barrier system uses a thin, fire-resistant barrier material placed within the standard fiberglass blanket. This barrier can be placed outboard of the insulation batting, inboard of it, or sandwiched between layers.

(3) An encapsulating system incorporates a fire-resistant film cover material, surrounding the batting, that also acts as a fire barrier. A variant of this arrangement could have the fire-resistant film on only one face of the blanket.

Note: Appendix 1 of this AC contains schematic representations of systems that have been tested using actual airplane structure and satisfy the requirement. These schemes can be demonstrated in the test rig, as defined in Appendix F, part VII. Variations from the representations shown in Appendix 1 of this AC that would make the installation more critical (for example, increased fastener pitch) may need to be assessed using a fixture modification such as is shown in paragraph 8 of this AC.

b. Overlap.

(1) Overlap at Frames. Any gaps in the insulation material provide a possible penetration route for fire to enter the cabin. Testing has shown that it is necessary to install insulation bags at frames so they completely cover the frames. Where this is achieved with more than one blanket, a minimum overlap of two inches should be used. Use the total frame height for frames smaller than two inches. Overlaps greater than two inches will provide greater protection times. Ideally, a single insulation blanket would extend over the frame. See figures 2 and 3. In those cases where there is cargo compartment liner meeting the requirements of part III of Appendix F, attached to or abutting the inboard cap of the frame, it is not necessary to overlap the insulation on the cap of the frame. See figure 4.

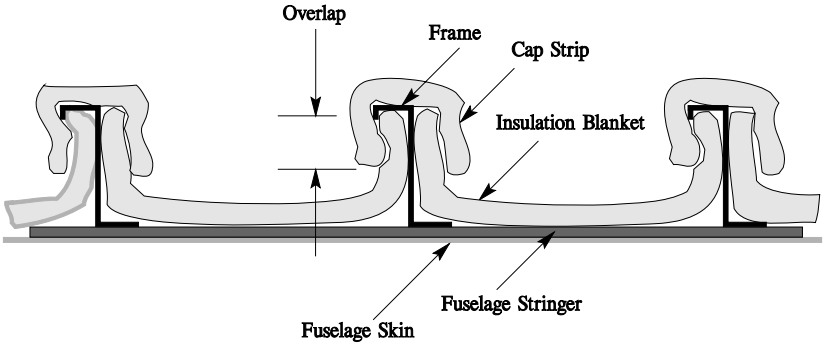

Figure 2. Method of Overlap at Frame

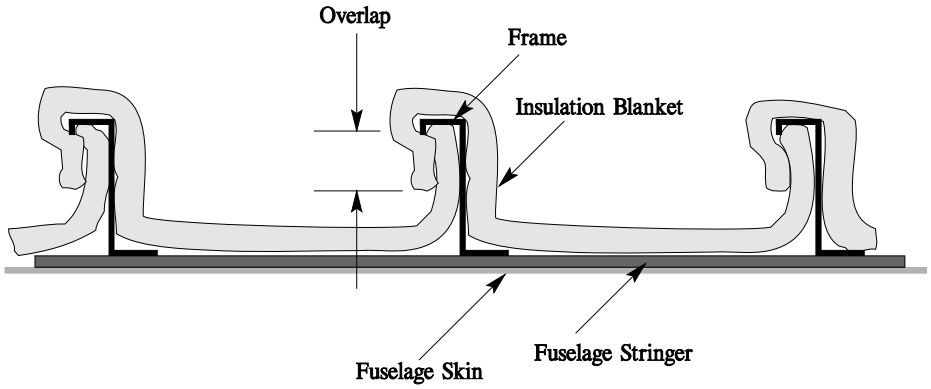

Figure 3. Method of Overlap at Frame

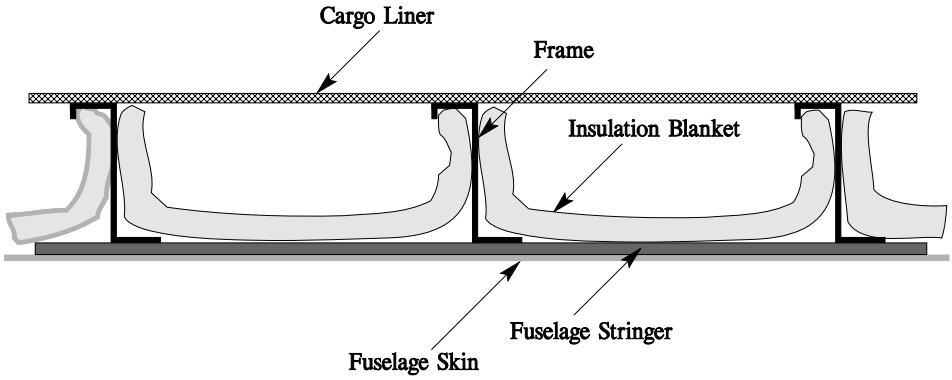

Figure 4. Cargo Liner as Part of Barrier

(2) Overlapping of Insulation Blankets. Joints between insulation blankets other than over frames should also be such that overlap of the blankets is provided. Testing has shown that a minimum of 6 inches of overlap is required in order to achieve satisfactory protection. For some materials, it may be possible to demonstrate that less than 6 inches of overlap is acceptable using the test burner. In that case, changing the burner/test stand relationship, so that the burner flame impinges between two of the frames, and on the overlapped area, is an example of an acceptable method to substantiate a lesser overlap (see paragraph 8.c.) Additionally, to reduce potential for fire entry, if the installation considerations permit, blankets should be "shingled" so that the upper blanket overlaps the lower blanket in relation to the fuselage interior. Joints may be secured with a tape or mechanical fasteners. See figure 5. Smaller amounts of overlap may be acceptable if the two blankets are fastened together using a fire-resistant fastening method, i.e., the melting point of the fastener is at or above the flame temperature. Typical hook and loop fasteners have not proven to be any more effective in delaying burnthrough than with blankets that are not fastened. Joints between blankets within a frame bay are not recommended where the overlap would be at the extreme bottom of the fuselage.

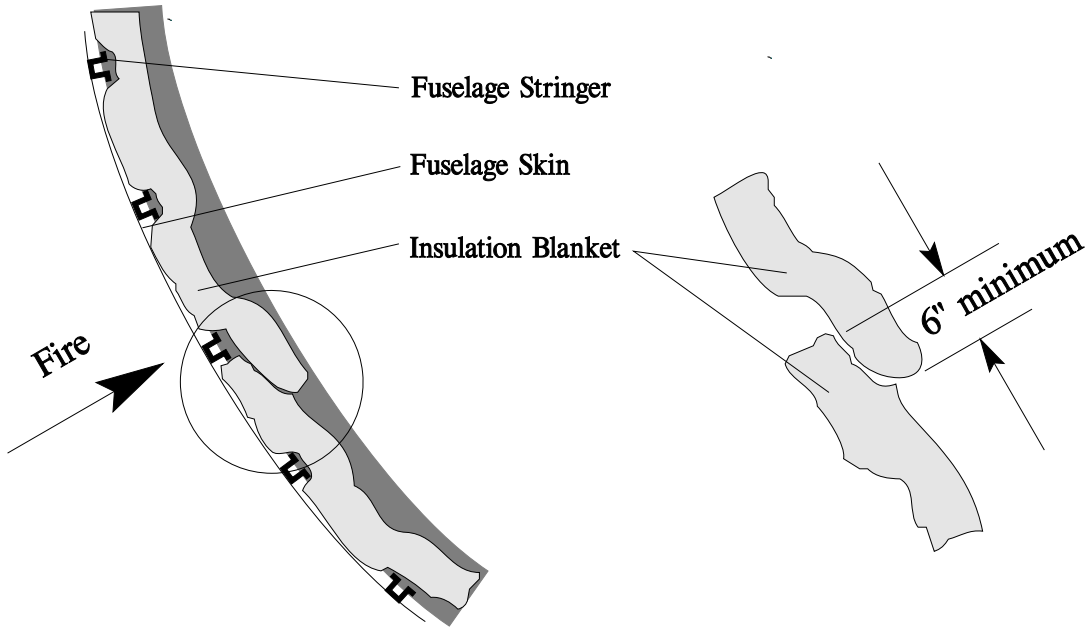

Figure 5. Method of Overlapping

c. Discontinuities.

(1) Terminal blocks, pipe attachments, or any other feature attached to the airplane structure in close proximity to the airplane skin present a possible fire penetration route unless protected. Where practical, the thermal/acoustic liner should be installed so as to minimize the potential for fire penetration. This might be achieved by providing a degree of overlap of the liner, or fabricating the item creating the discontinuity in the liner out of material that is fire resistant.

(2) Certain discontinuities are unavoidable: for example, where essential systems must go from the outboard to the inboard side of the insulation material, and such systems cannot practically be constructed of fire-resistant material themselves. Since the regulation does not mandate installation of thermal/acoustic insulation, such discontinuities cannot be prohibited, although their occurrences should be minimized. Such discontinuities need not be considered in the test samples. The rule, however, *does* require consideration of the installation design methodology, so discontinuities in the insulation would not be acceptable if they are *caused by* the installation design methodology.

(3) Alternatives such as intumescent coatings may provide a means to address certain discontinuities, where a change to the installation methodology would be cumbersome. An applicant that proposes to use an intumescent coating in this way should coordinate its proposal with the FAA, since there are at present no standardized methods for testing this approach.

d. Attachment Methods.

(1) General.

(a) Penetration of thermal/acoustic liners should be avoided wherever possible since this results in a possible fire entry point. Attachment methods that do not penetrate the liners, such as over-frame attachments, are preferred, and carry fewer constraints on the type of material they may be constructed from.

(b) Attachment methods that provide good mechanical retention of thermal/acoustic liners are more likely to provide good burnthrough protection, provided they also have the other physical and material properties defined in this AC.

(c) Fasteners that are potentially exposed to the fire and maintain the continuity of the barrier do not require testing if they are of a material whose melting point exceeds the fire temperature. Other such fasteners should be tested. Fasteners that are not exposed to the fire can be made of aluminum or high temperature plastic. Attachments to the structure do not require testing if the attachment to the structure is not critical in maintaining the barrier, e.g., fasteners that maintain a specific shape or form, but whose failure does not introduce a void in the barrier.

(d) The purpose of the tests discussed in paragraphs 8b and 8c of this AC is primarily to ensure the *continuity* of the barrier, rather than fire resistance of the material system. Heat flux is not measured in these tests, because the ability of the material to resist heat transfer should have been demonstrated in the basic material test. The installation test shows whether the attachment materials and methods will prevent physical fire penetration.

(2) Through-Frame Attachments. Attachment methods or fasteners that penetrate the insulation bag and frame should be metallic (that is, aluminum, or material with an equivalent melting point). Attachment point spacing (pitch) along the frame should be a maximum of 14 inches. Testing has shown that a pitch of 14 inches will provide acceptable fire penetration resistance. Conversely, testing has also shown that a pitch of less than 14 inches does not provide significantly enhanced protection. See figures 6 and 7.

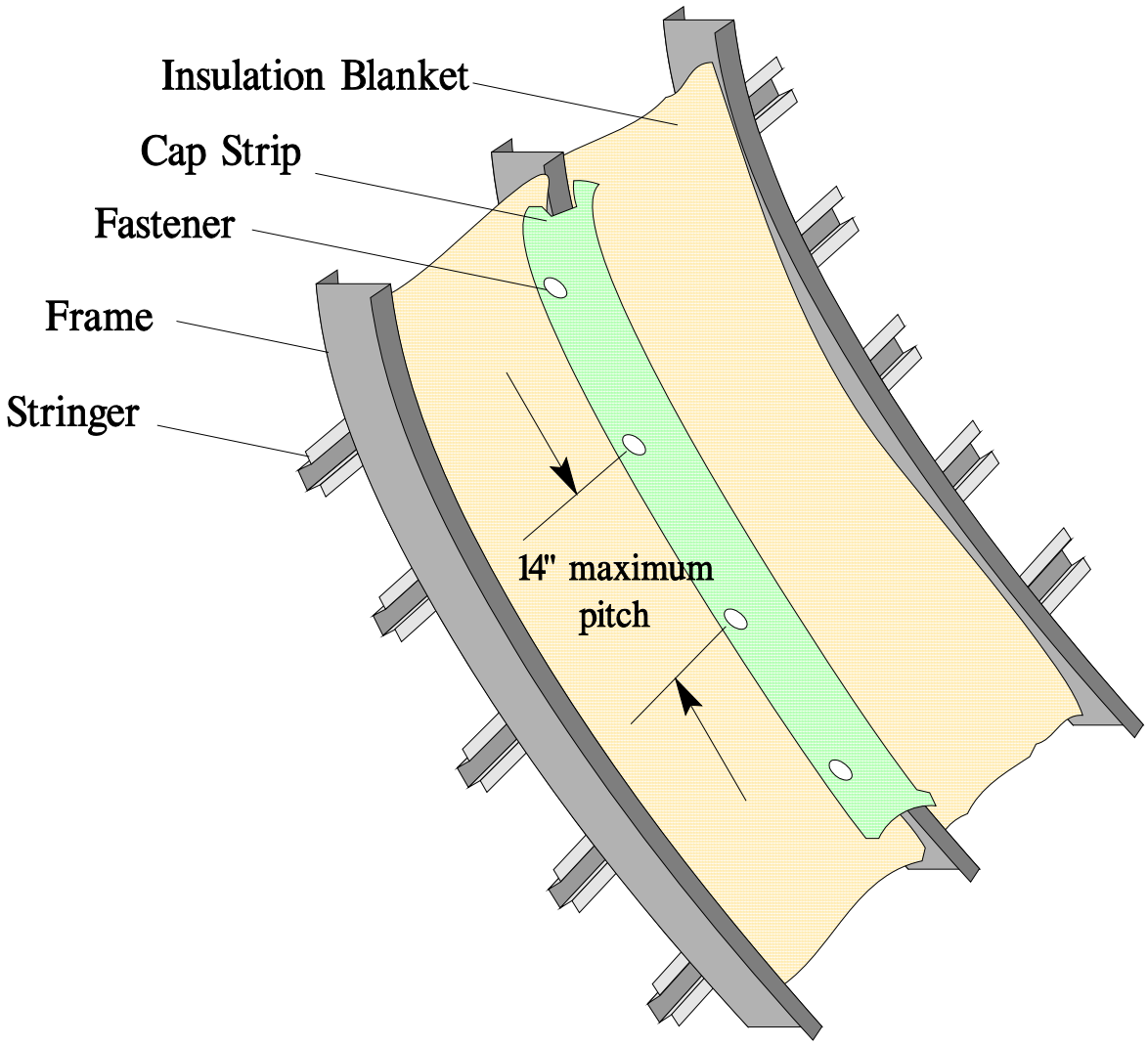

Figure 6. Frequency of Attachment (Pitch)

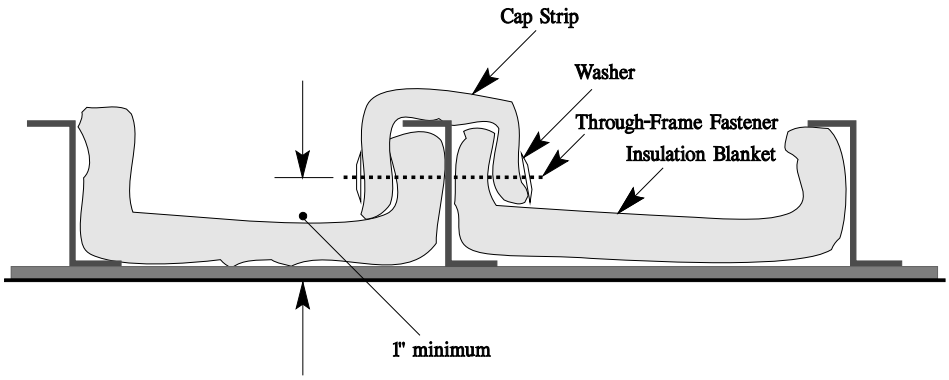

Figure 7. Through-Frame Fastener

Through-frame attachments should be installed as far away from the fuselage skin as practical. The space between the fuselage skin and the through-frame attachment should be a minimum of 1 inch. Where it is not practical to achieve this amount of space, consideration should be given to alternative attachment methods (for example, over-frame attachments). See figure 8. Note that this AC does not address structural ramifications associated with attachments that penetrate the airframe.

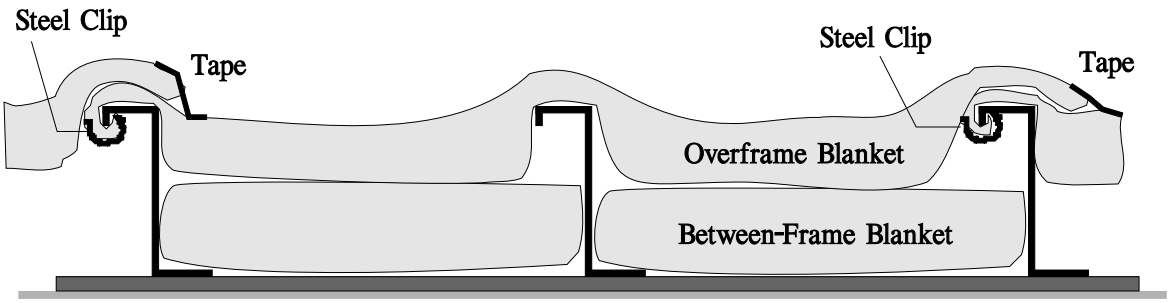

Figure 8. Over frame Attachment

(3) Over-frame Attachments. Fasteners that do not penetrate the frame, but provide attachment for the insulation bags by clipping them over the top of the frame, have been found to be satisfactory in terms of preventing fire penetration at the joints. The design and material of such clips and their pitch should provide good retention of the thermal/acoustic liners. A maximum pitch of 14 inches for over-frame attachments has been demonstrated to be acceptable for compliance. See figures 8 and 9.

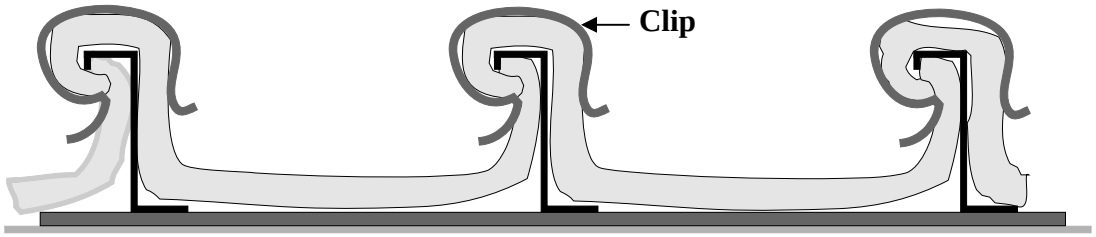

Figure 9. Over Frame Blanket Installation

(4) Stringer Attachments. Fasteners that penetrate the thermal/acoustic liner and attach it to stringers should be metallic (that is, aluminum, or material with an equivalent melting point). See figure 10. However, as noted in paragraph 7.(d)(1)(c), fasteners that only maintain the shape or contour of the blanket could be made from any material.

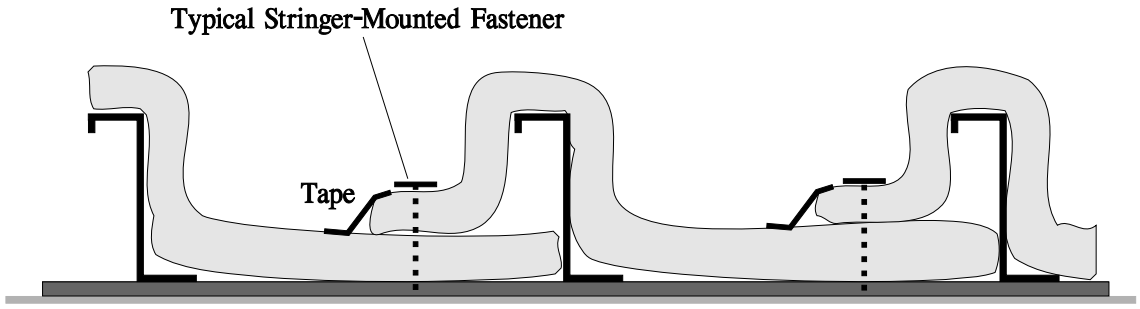

Figure 10. Stringer-Mounted Fastener

e. Lower Half. Section 25.856 requires that thermal/acoustic insulation installed in the lower half of the fuselage comply with the test requirements of part VII of Appendix F for flame penetration resistance. As discussed in the preamble to Amendment 25-111, the requirement applies to thermal/acoustic insulation installed against the fuselage skin, or in another manner that provides burnthrough protection. The regulation *does not* apply to insulation on ducts installed in the lower half of the fuselage, where the insulation would not contribute to burnthrough protection. The requirement *does* apply to insulation installed on the floor panels, if there was no insulation installed on the outer fuselage in the lower half. The requirement does *not* apply to both places when insulation is installed in both places. It is the intent of the regulation that the occupied areas of the airplane have greater fire protection through enhanced burnthrough resistance of the lower half of the fuselage, using installed insulation (see figure 11).

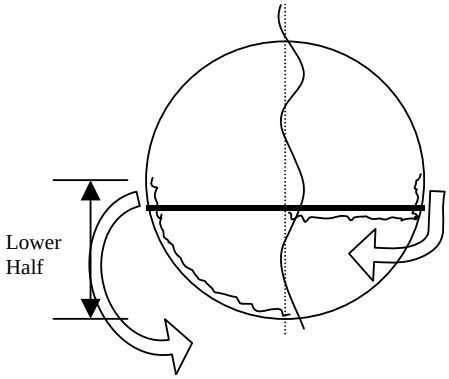

Figure 11. Shows two approaches to insulating the lower half of the airplane. On the left, the insulation is installed on the fuselage skin; on the right, the insulation is installed along the floor. Either approach would have to comply with the requirement. But if insulation was installed in both places, it would only have to comply in one place.

Figure 11. Insulation on Lower Half of Airplane

8. OTHER THERMAL/ACOUSTIC INSULATION CONCEPTS. The oil burner test described in part VII of Appendix F is intended to represent the temperature and heat flux approximately equivalent to a post-crash fire. The scale of the test method does not replicate the scale of an actual fire. In addition, the test stand incorporates steel components to facilitate repeated testing, and to eliminate small structural details from the test setup. When materials or installation designs other than those discussed in section 7 are used, the standard test apparatus

may not be appropriate. It is not necessarily adequate to simply incorporate a novel feature or design concept into the test sample to verify its acceptability. In some cases, larger scale testing will be required to support development of special conditions. In other cases, the test burner might be acceptable, but the test stand might require modification (for example, substitution of aluminum frames for the steel frames) in order to produce valid results. This paragraph provides other acceptable means for showing compliance. The discussion of the test fixture modifications and burner orientations is very specific and will provide acceptable results. However, there may be other methods of achieving the same objective, and the discussion below is not meant to imply that only the modifications shown are acceptable.

a. Other Material Types. As previously noted, this AC assumes one of three methods of providing a fire barrier with respect to substantiation of installation details. Other methods, such as foam blocks or spray-on applications, have not been investigated to the same extent; and reliable substantiation methods for installation have not been developed. Conduct realistic testing on these types of materials to establish guidance for their installation. The general principles for avoiding discontinuities and penetrations are expected to be valid, regardless of the type of insulation employed. Some specifics, for example the amount of overlap, are likely to be different.

b. Other Means of Attachment. Means of attachment that vary significantly from those described in this AC will require substantiation with more representative installation fixturing. For example, a hook and loop type attachment would require substantiation by test, but could probably be accomplished using the test burner, with appropriate modification to the frames and stringers.

c. Modification of the Test Fixture.

(1) If the test fixture needs to be modified in order to address material and/or installation schemes not anticipated by the rule, the existing vertical steel frame is replaced with an aluminum frame. Similarly, two of the steel horizontal stringers are replaced with aluminum stringers (see figure 12). This methodology allows the aluminum members to melt and fail with the realism of an actual aircraft fuselage during a post-crash fire scenario. Under these conditions, not only are the blanket materials being tested, but the ability of the insulation *system* for preventing flame penetration is examined. Such a test also assesses details of the system used to attach the insulation to the frame, including clips, tape, hook and loop, etc. Since there are numerous combinations of frame geometry, material thickness etc., the applicant should propose a critical case for substantiation of use on the airplane, if this method of testing is necessary.

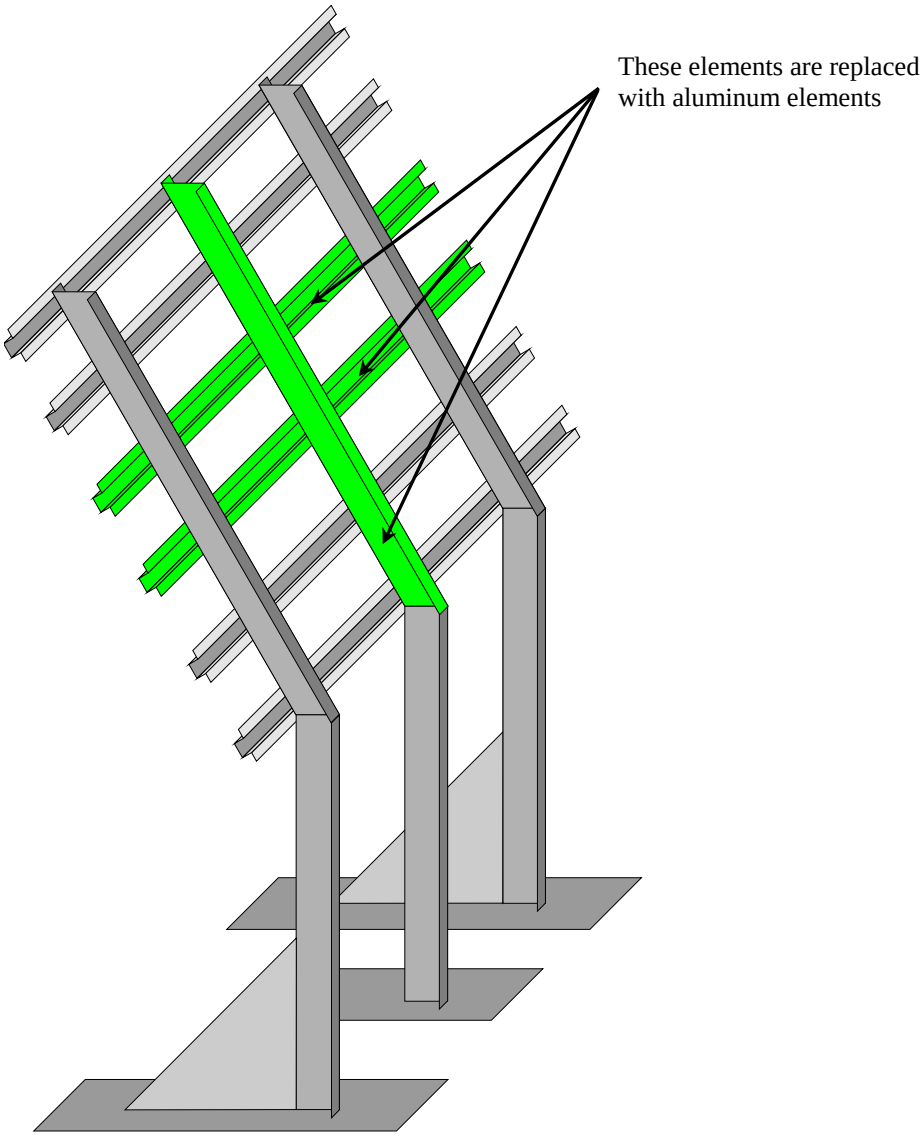

Figure 12. Modified Test Fixture Incorporating Aluminum Components

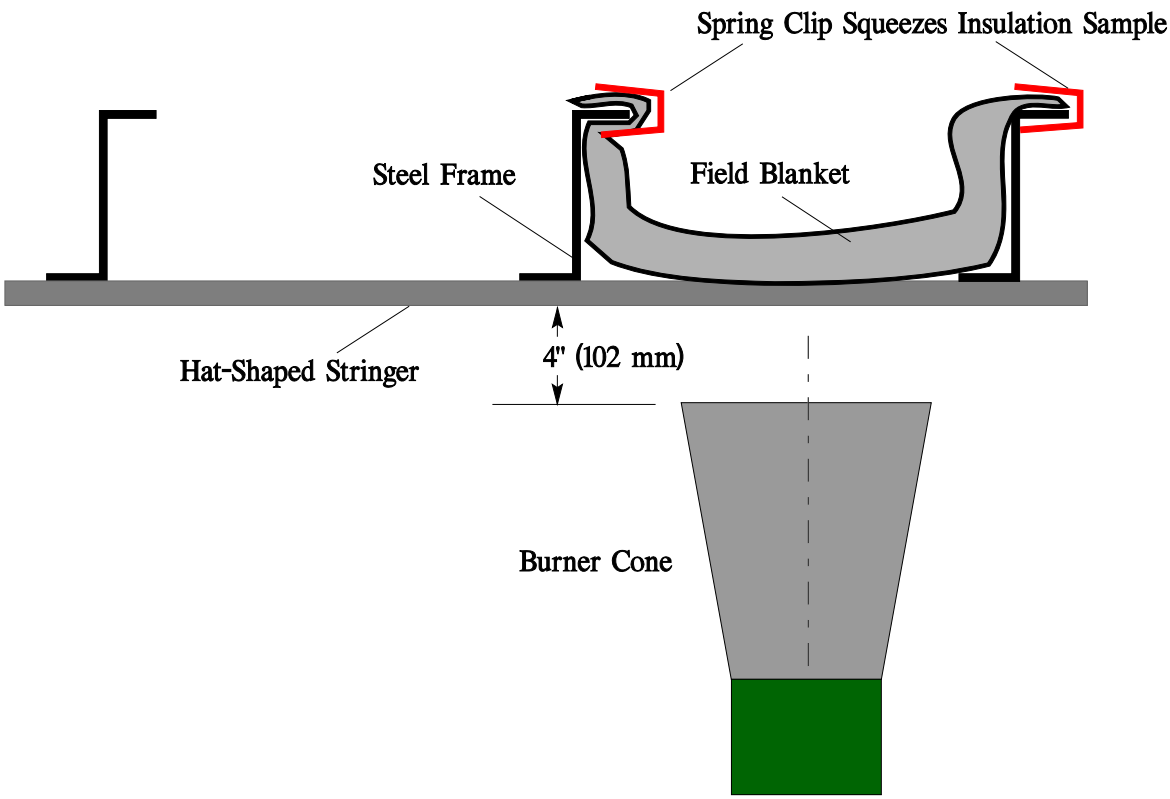

Figure 13. Apparatus Configuration for Testing Overlap

(2) To evaluate an overlap arrangement using less than 6 inches of overlap, both the test stand and its relationship to the burner need to be changed. Figure 13 illustrates the arrangement, which involves moving the burner (or stand) so that the burner flame impinges directly between two frames. In addition, the third stringer from the bottom (i.e., in line with the center line of the burner) is removed and the exposed seam of the overlap is positioned at this point (figure 14). For this configuration, only physical burnthrough is assessed (no heat flux measurement is required). This is because the geometry no longer represents the standard, and the heat flux measured on the back side would not be comparable to the standard. In addition, the basic material will be qualified in the standard configuration, and that will include assessment of the back side heat flux. It is acceptable to either leave the other frame bay empty, or install a complying material in the standard manner.

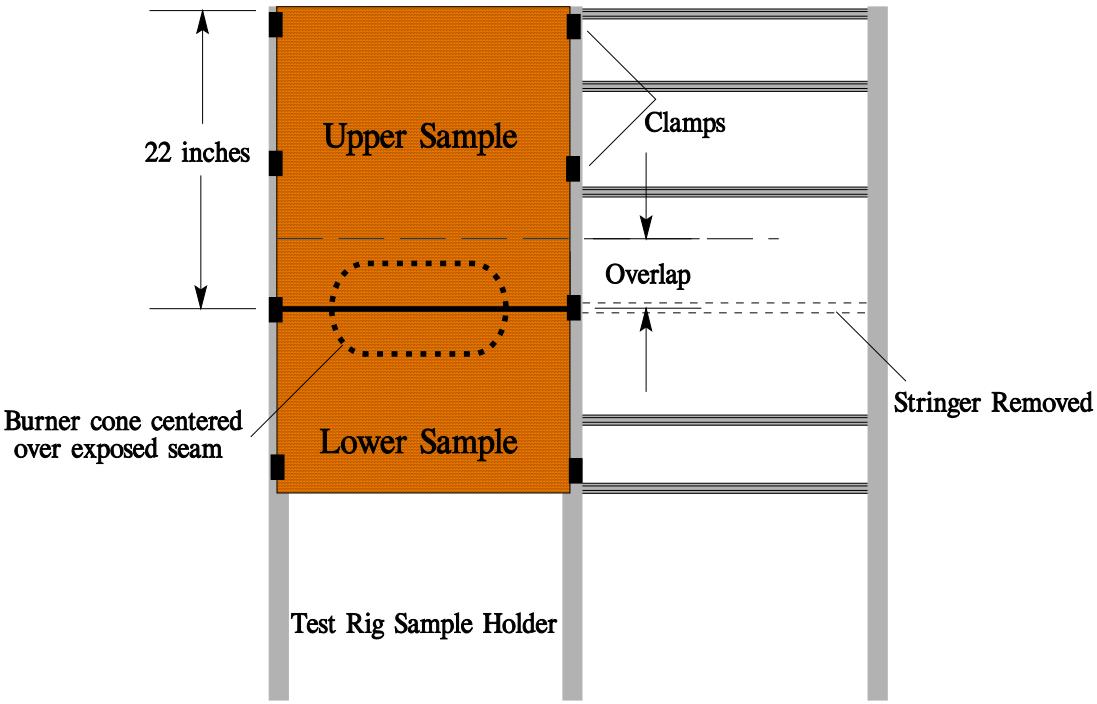

Figure 14. Test Specimen Configuration for Testing Overlap

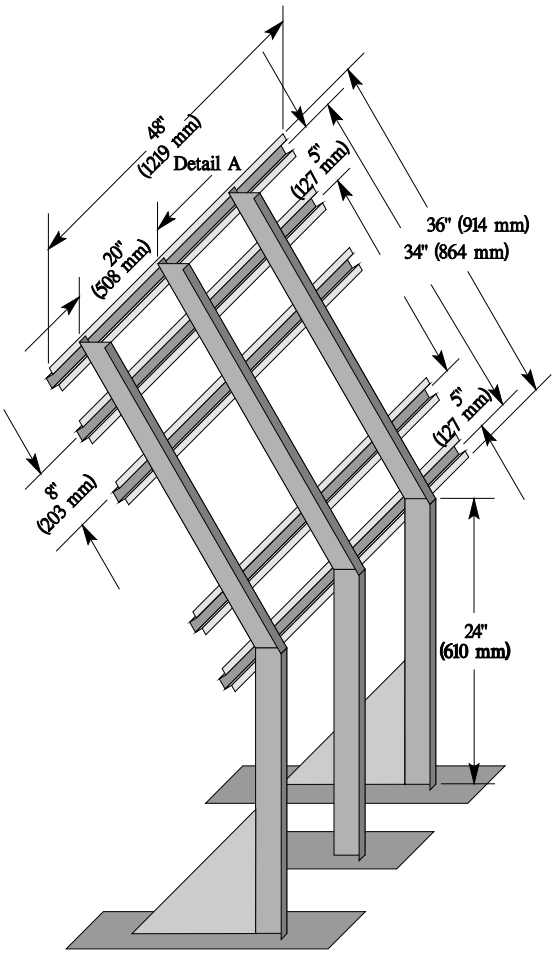

Figure 15. Modified Apparatus for Testing Overlap

9. INSTALLATIONS THAT DO NOT REQUIRE COMPLIANCE WITH § 25.856(b). As noted in paragraph 5e of this AC, the FAA may determine that certain installations will not contribute to fire penetration resistance, even if they complied with § 25.856(b). The following installations have been assessed and determined to fall into that category because of inherent characteristics of the installation, the location, or both.

a. Lower lobe cargo doors: Lower lobe cargo doors leading into class C cargo compartments, and having a complete (recognizing that there will be cutouts for the hinges and possibly the operating handle) liner on the door meeting the requirements of the 'ceiling' portion of Appendix F, part III, do not require modification to the insulation inside the door.

b. Passenger doors: If less than 12" of the door is in the lower half of the fuselage, the insulation on the door does not need to comply with § 25.856(b). If 12" or more of the door is in

the lower half, and insulation is held in place mechanically, the insulation material should meet the requirements of § 25.856(b), but the attachment method does not need to be tested. If the insulation is not held in place mechanically, a test of the actual attachment configuration is required. However, actual door structure should not be necessary, as long as the attachment method is represented in a test such as discussed in paragraph 8.

c. Wing box: The wing box itself does not require improved insulation (assuming it is insulated). Note that the insulation installed on the outer skin in the fuselage above the wing box *does* require improved burnthrough protection for the portion that is in the lower half of the fuselage. See figure 16.

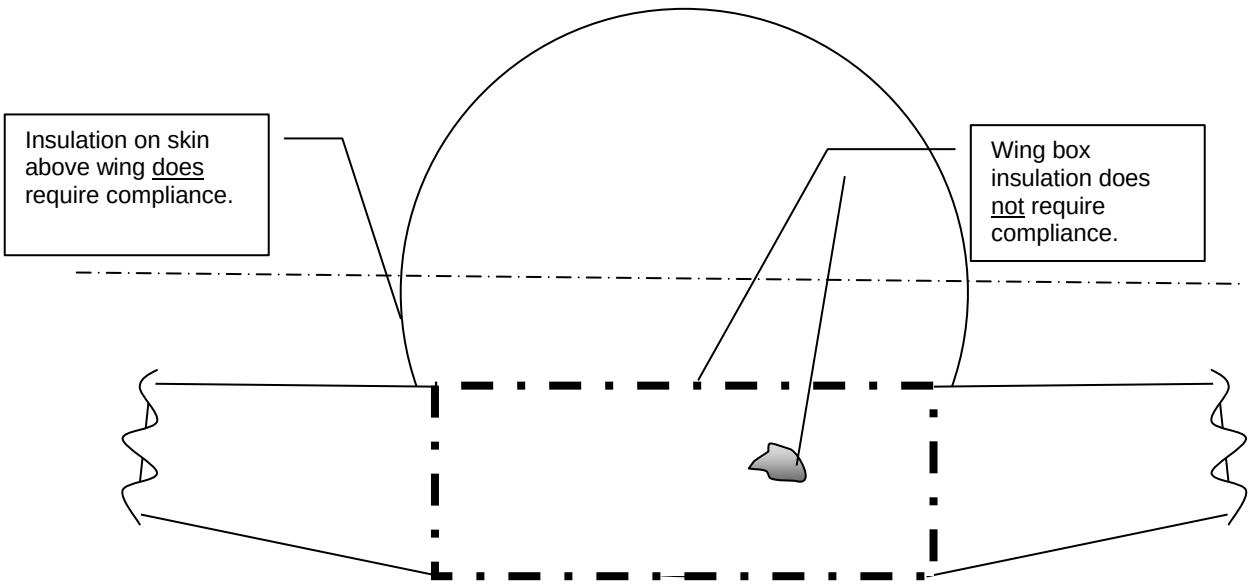

Figure 16. Wingbox Area

d. Window line: Some allowance may be possible if the half-way point (between the upper and lower half of the fuselage) intersects the passenger windows. That is, adding insulation between closely spaced windows will not contribute to burnthrough protection in some cases. Because each installation is different, any proposals that involves noncompliant insulation between windows that are in the lower half of the fuselage should be coordinated with the FAA. See figure 17.

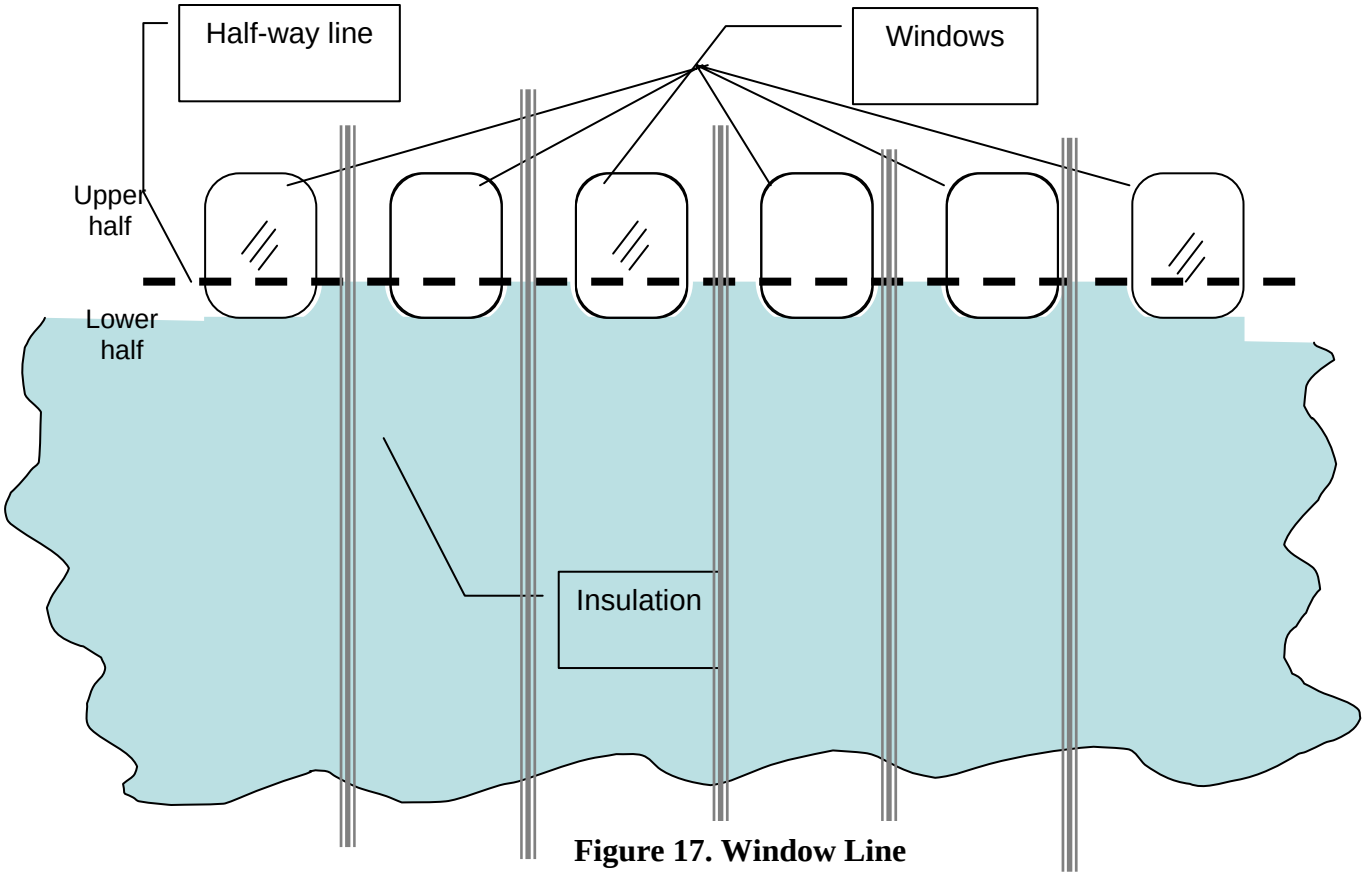

Figure 17. Window Line

e. Flightdeck. The flightdeck floor is often very close to the half-way point. Because of the changing geometry at the nose of the airplane, the half-way point can transition from above the flightdeck floor to below the flightdeck floor. In some cases, it may be acceptable to limit the burnthrough protection to the flightdeck floor. However, this should be coordinated with the FAA.

10. TEST CONDITION DETAILS. 14 CFR 25, Appendix F, part VII, specifies a “modified, gun-type” burner such as a Park Model DPL3400 to obtain consistent test results. The FAA has also developed an alternative burner that does not rely on a motor driven fan and fuel pump. This burner is an acceptable “modified gun-type” and is discussed in more detail in Appendix 2 of this AC.

a. Research has shown that laboratory test conditions can have an influence on test results. In particular, room temperature can affect the calibration, which will, in turn, influence the test results in certain cases. Maintaining consistent environmental conditions, especially between calibration and testing, improves the consistency and reliability of the test results.

b. In addition to the calibration procedures described in Appendix F, part VII, it is useful to periodically “map” the heat flux of the burner over a larger area than is typically encompassed by the calibration measurement. Since each burner will have its own signature heat flux map, the important consideration is consistency; that is, a given burner should maintain approximately the same heat flux map over time.

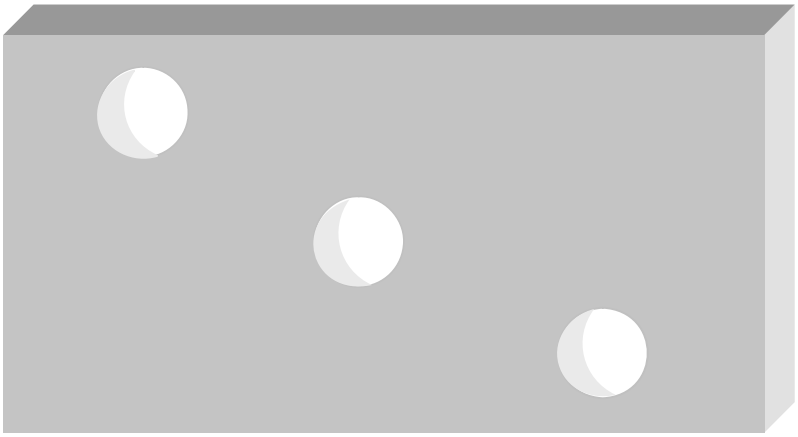

Figure 18. Heat Flux Mapping Fixture

Lab F, New Mapping Procedure w/Intake Duct, 2150 Ft/min

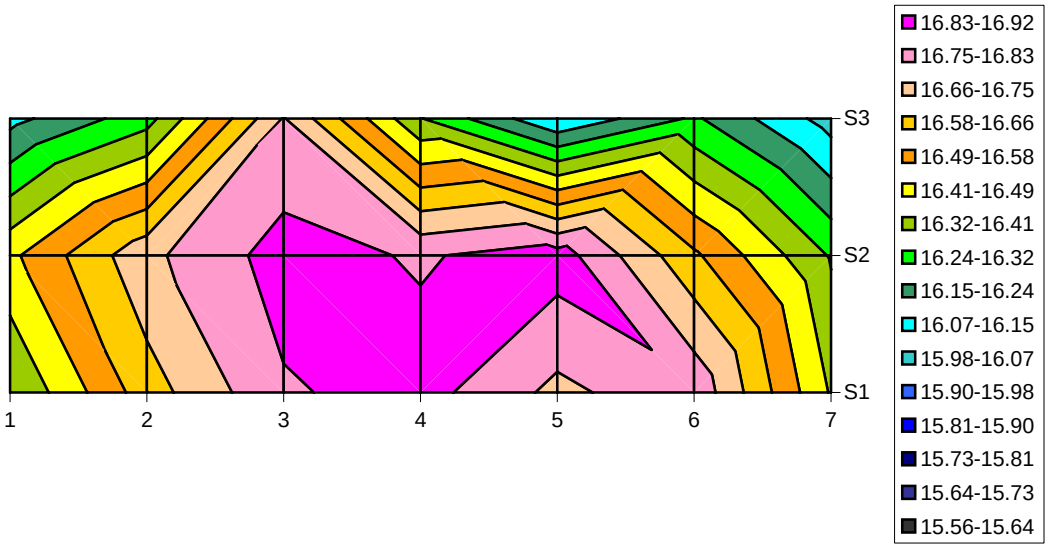

Figure 19. Example of Heat Flux Map

c. The insulation film on each test blanket should have two small slits cut on the back side (away from the flame) to allow combustion gases to escape. This prevents the test blankets from “ballooning,” which can alter test results. It is recommended that the 2-inch slits be cut into each blanket, far enough away from the center vertical frame so as not to influence test results. The ballooning phenomenon is not an issue in an actual airplane, because the airplane contains continuous structures and heat transfer mechanisms not present in the test fixture. Therefore, use of slits in the actual installation is not required.

d. Fuel Nozzle. Appendix F, part VII, states that a 80°PL (hollow cone) fuel nozzle manufactured by Monarch delivers a proper spray pattern, when used in a Park Model DPL3400 burner. Due to manufacturing changes, this specific nozzle may not be available. In fact, the nozzles used in the Park Model DPL3400 burner evolved over the years. Since the nozzle is a very important element in achieving proper performance, the details of the nozzle design will have to be examined, to confirm that the correct configuration is used. The basic configurations are all similar and consist of a nozzle body and two internal components. Inside the threaded nozzle-body there is a slightly concave swirl disc, which is held tightly against the underside of the concave-tipped nozzle-body, using a threaded backing plug. Only a nozzle with a “slotted” back is recommended. Unless the nozzle contains a "slotted" backing plug, it may not perform acceptably. The original, slotted-backing-plug nozzles were designated as “F-80.” Later versions of that nozzle did not contain this designation but can be identified by a hexagonal backing plug. Experience has shown that a 6.5 gallons per hour (gph) 80 degree, PL nozzle (with a slotted backing plug), with the fuel pressure adjusted to produce the required 6 gph (approximately 85 pounds per square inch), will produce satisfactory results. The actual flow rate should be verified any time the nozzle is changed, even if the nozzles are the same model. Note that although the nozzle is intended to have a symmetrical, hollow-cone spray pattern, the spray pattern may vary from unit to unit. Therefore, the rotational position of the nozzle, regardless of the stator position, can influence the heat flux measurement and potentially influence the test results. To facilitate calibration it is useful to document the optimum nozzle position.

e. Burner casting. There are two main types of burner castings commonly in use. These are known as ‘socket’ and ‘flange,’ descriptors for the way the draft tube fits into the housing. Experience has shown that the socket type burners tend to produce somewhat higher velocity exit airflow for the same calibration settings. This can result in conservative test results.

f. Airflow through the burner is of critical importance. Ideally, air should only enter and leave the burner through the air inlet and outlet respectively. The burner housing and any other potential sources of air leaks should be sealed. In addition to measuring the airflow into the burner, it may also be useful to measure the airflow out of the burner. This helps confirm consistency of performance and accuracy of the measurements. Variations in airflow can greatly influence the test results, with all other parameters being equal. For this reason, regularly calibrate the air velocity meter. As with heat flux, it may be useful to periodically map the airflow out of the burner cone to monitor consistency of performance.

g. Stators.

(1) The burner should have a stator at the exit of the draft tube. A Monarch F-124 stator is recommended to produce the most consistent results.

(2) Appendix F, part VII, calls for an internal stator inside the draft tube. A Monarch H215 stator is recommended to produce the most consistent results. However, there are slight variations in the casting for that stator that may make it necessary to modify the stator in order to achieve calibration. Such modifications consist of surface treatment to the stator vanes and have the effect of altering the airflow so that the heat flux measurement can be achieved at the specified location. These modifications do not change the intensity of the burner flame, but are a calibration aide.

h. Igniters. The length of the igniters is not specified in Appendix F. Experience has shown, however, that the igniter's overall length should be as shown in figure 18.

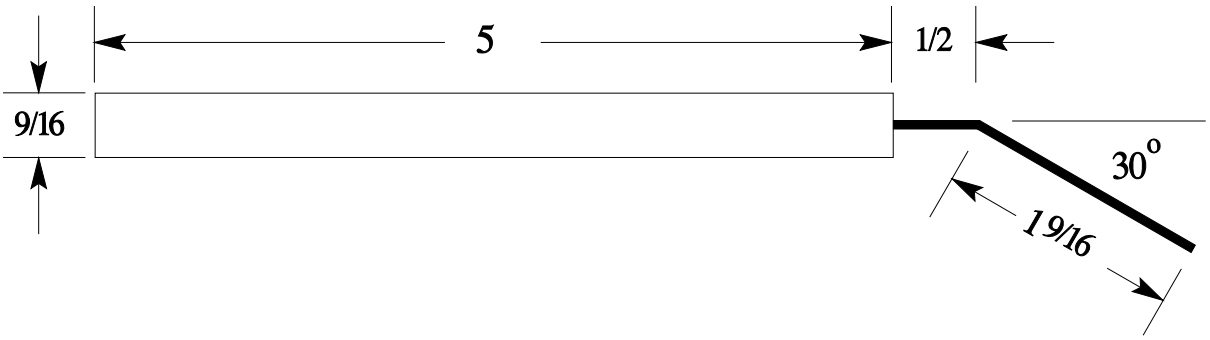

Figure 20. Igniter Geometry

i. Test specimen mounting frame. The center vertical frame can become distorted from repeated exposure to the test burner. Deviations from true of more than +/- 0.25" should be corrected to avoid affecting test results. Note that the gauge of the center vertical frame is heavier than the frames on the sides.

j. Fuel and air temperature. The fuel and air temperature controls discussed in Appendix 2, paragraph 7 may also prove valuable when calibrating and testing with the standard burner.

Signed by Ali Bahrami

Ali Bahrami
Manager, Transport Airplane Directorate
Airplane Certification Service

Appendix 1

Acceptable Installation Approaches

1. Batting Systems

Figures 1-1 through 1-3

2. Barrier Systems

Figures 1-4 through 1-8

3. Encapsulating Systems

Figures 1-9 through 1-10

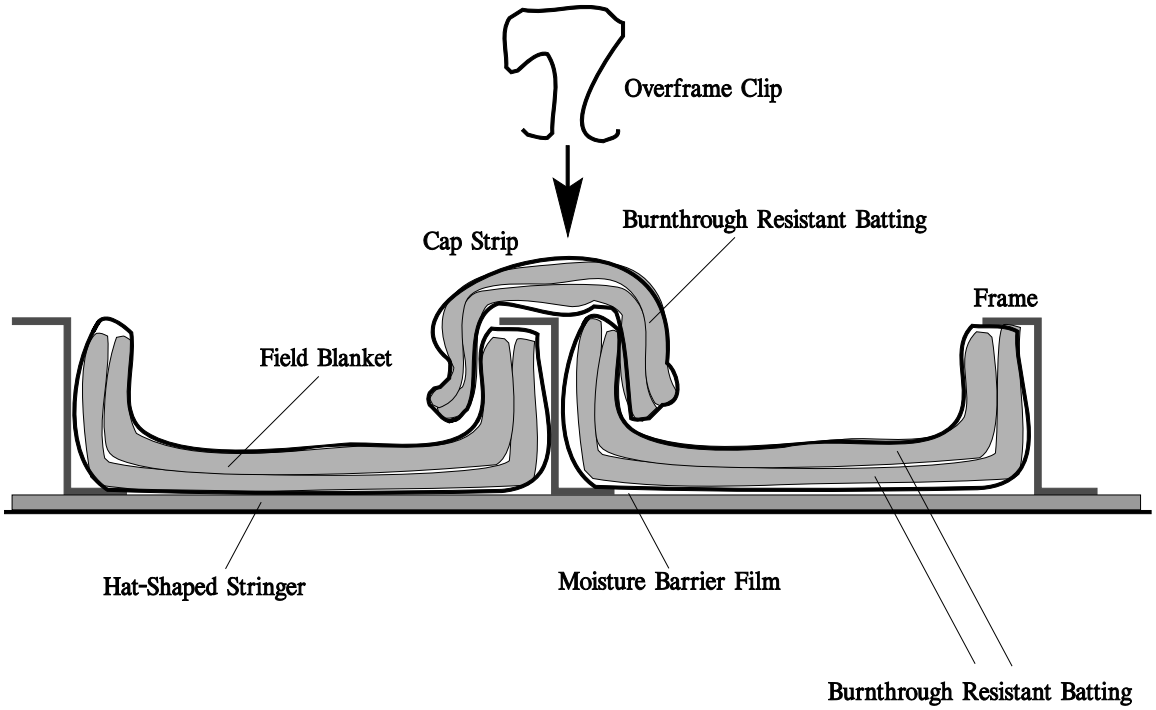

Figure 1-1. Conventional Replacement Batting System

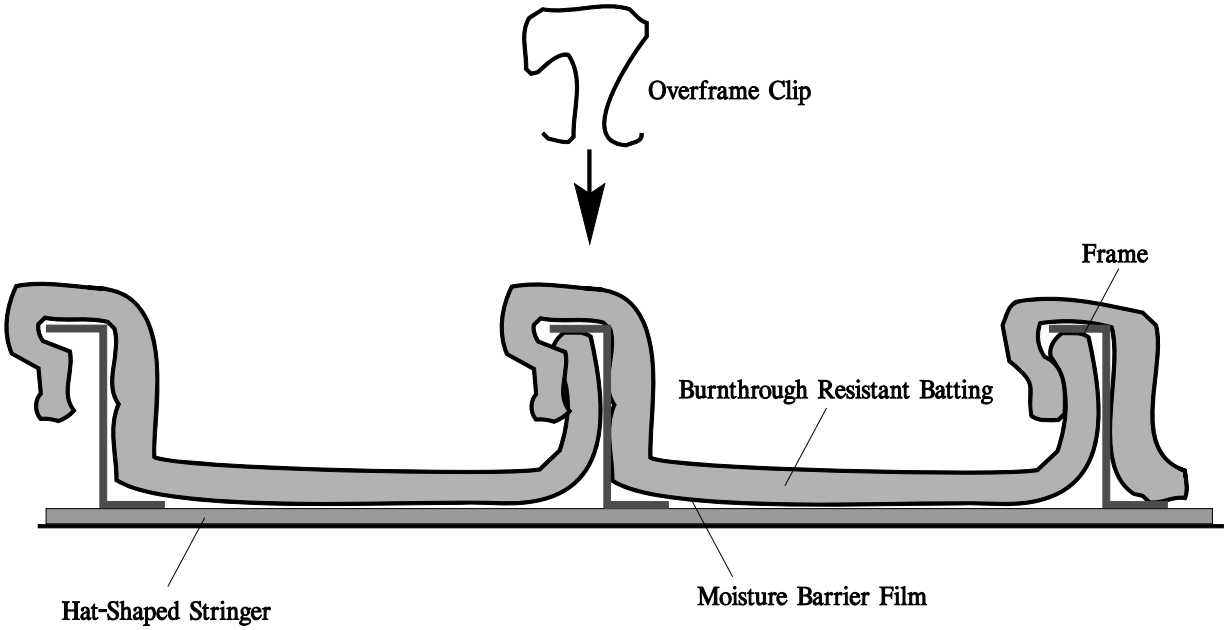

Figure 1-2. Integrated Capstrip/Field Blanket Replacement System

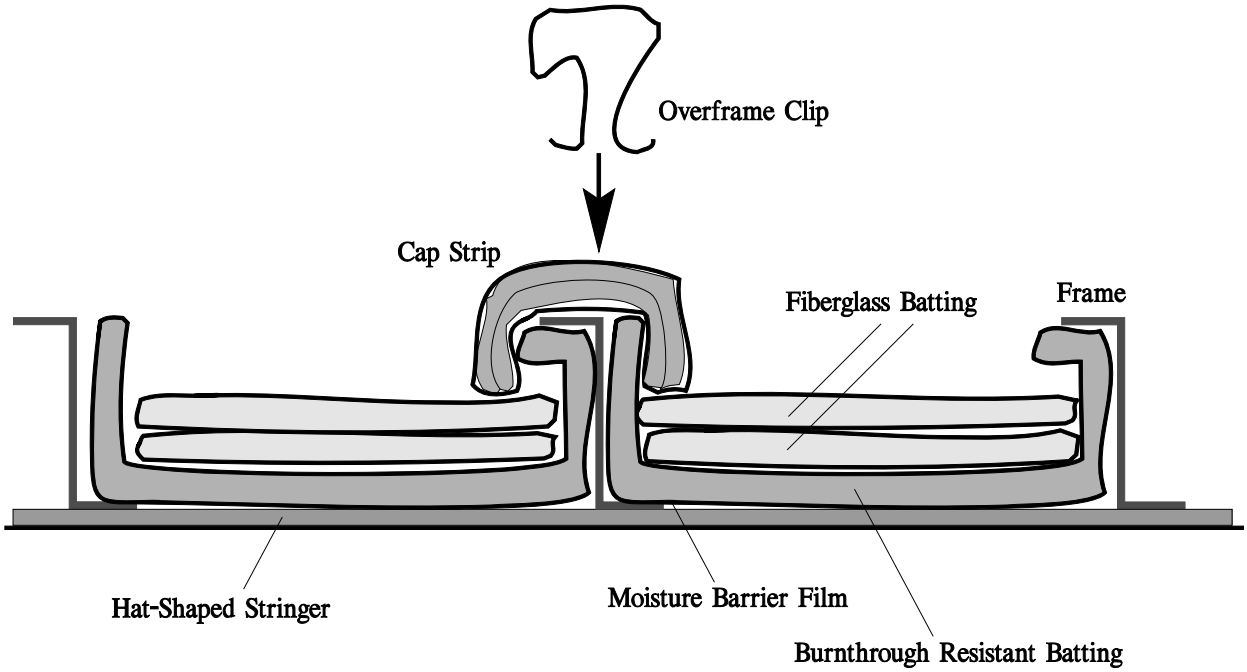

Figure 1-3. Combination Fiberglass/Replacement Batting System

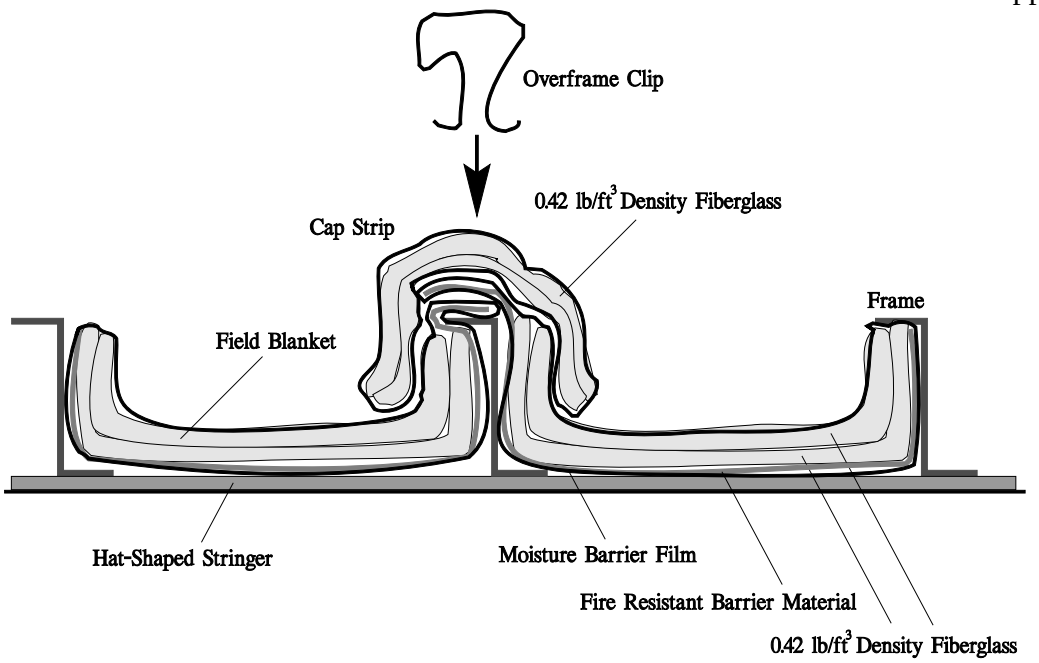

Figure 1-4. Barrier Material Used in Conjunction with Fiberglass

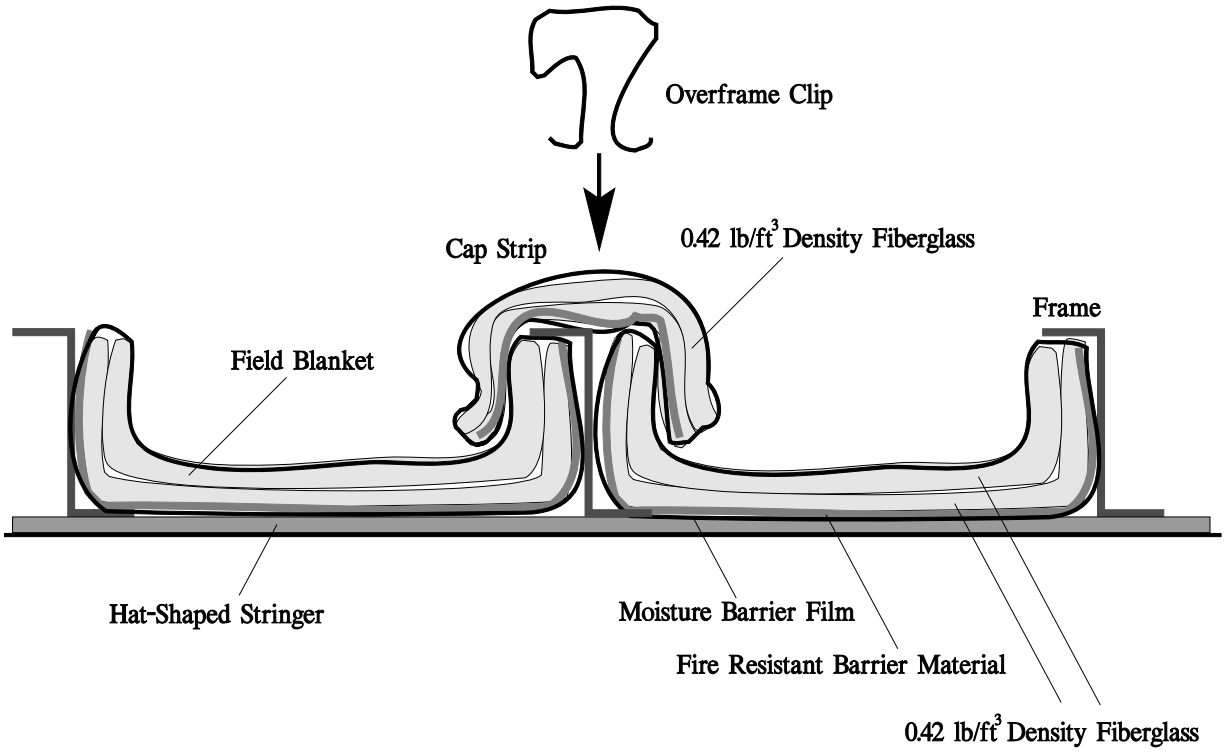

Figure 1-5. Barrier Material Used (including over frame) in Conjunction with Fiberglass

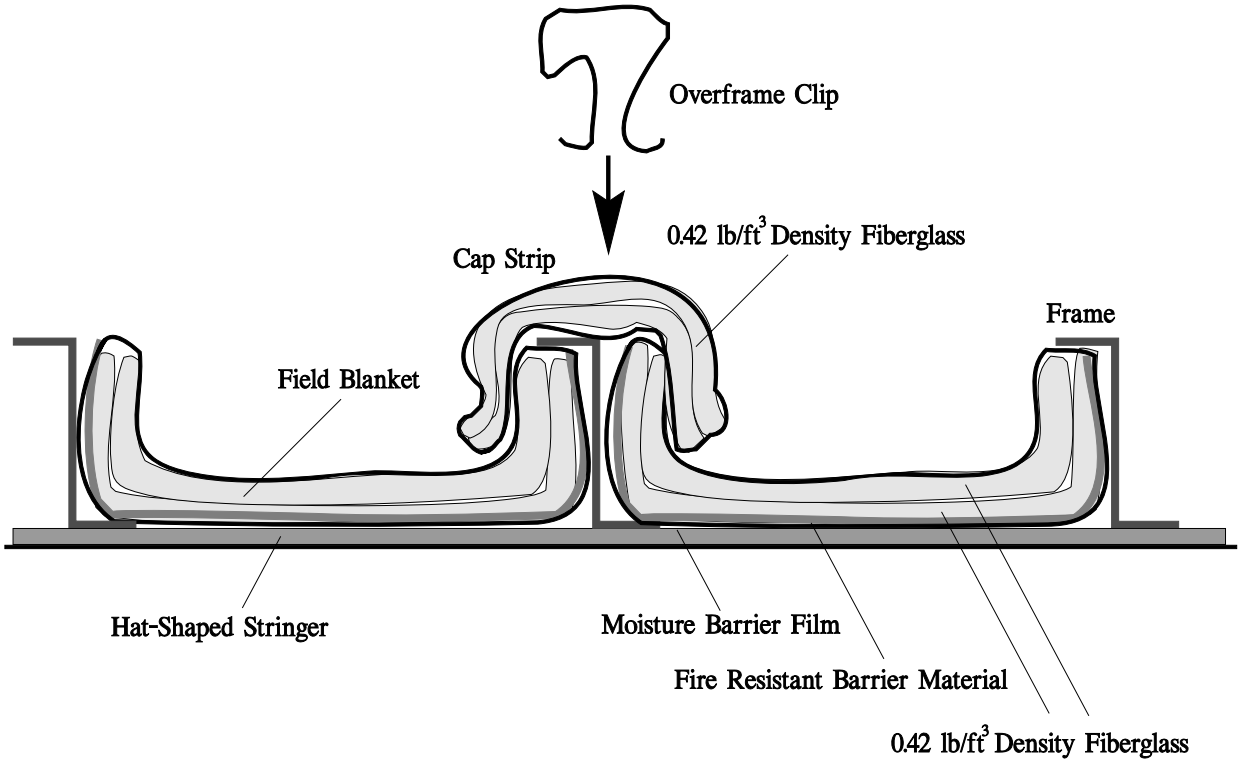

Figure 1-6. Barrier Material Used in Conjunction with Fiberglass

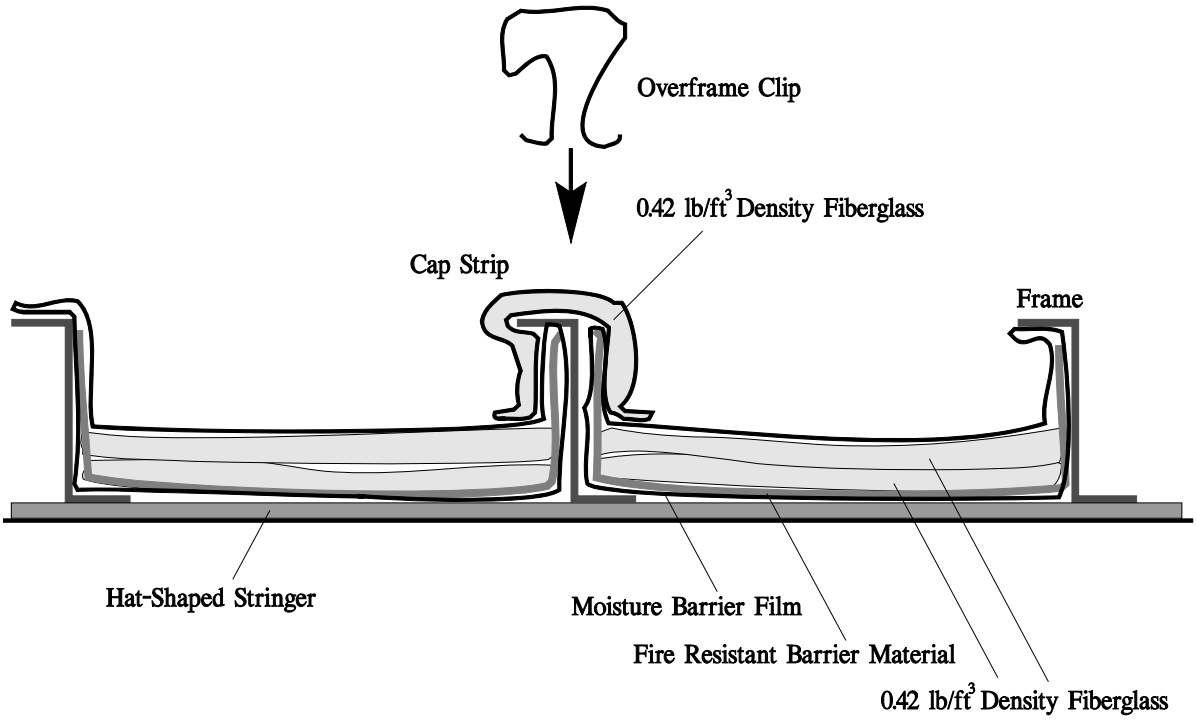

Figure 1-7. Barrier Material Used in Conjunction with Fiberglass

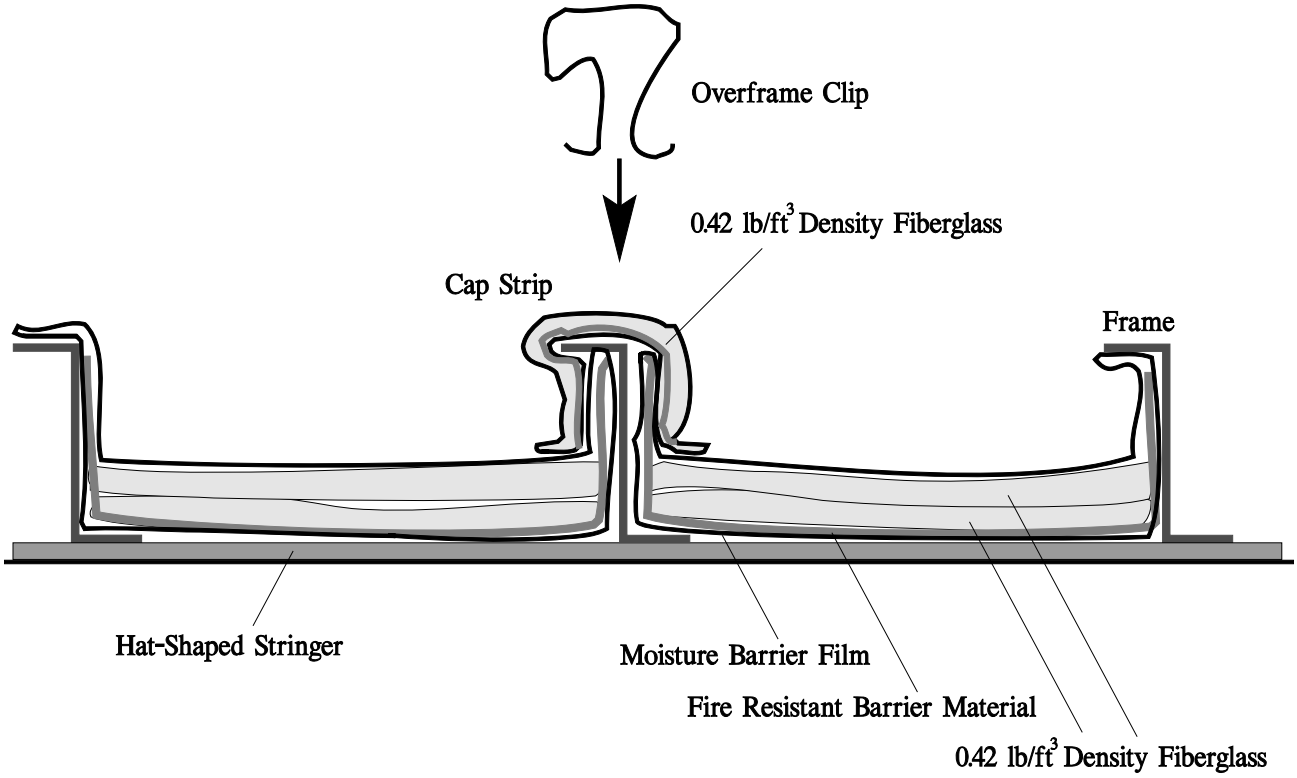

Figure 1-8. Barrier Material Used in Conjunction with Fiberglass

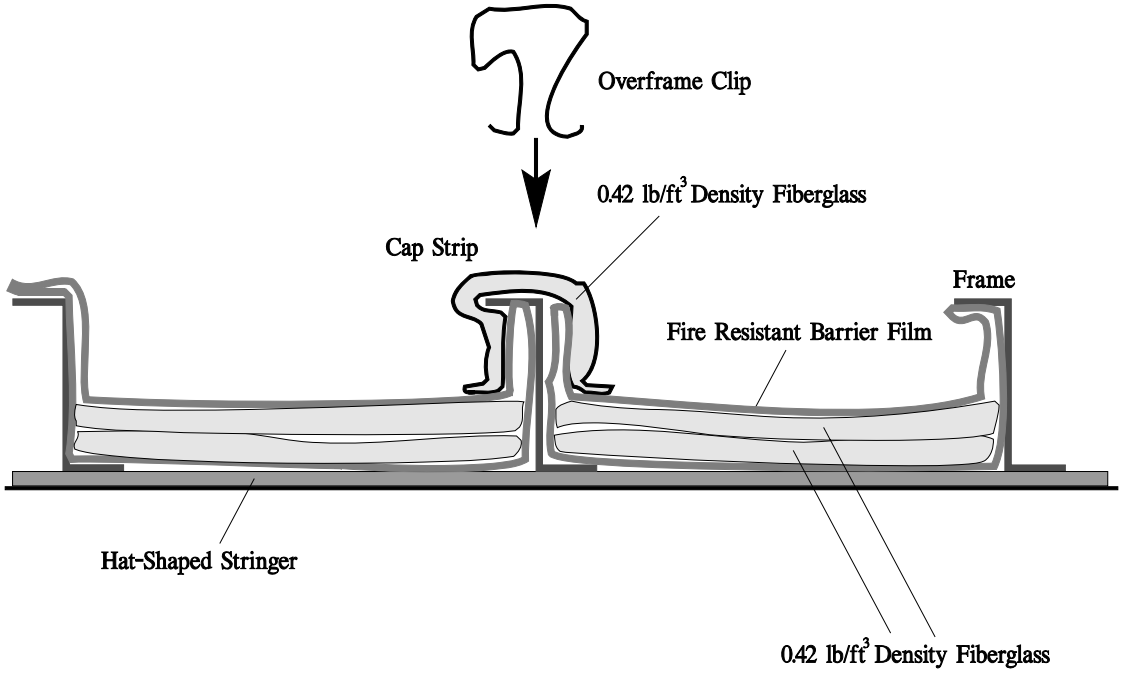

Figure 1-9. Encapsulating Film System Used in Conjunction with Fiberglass

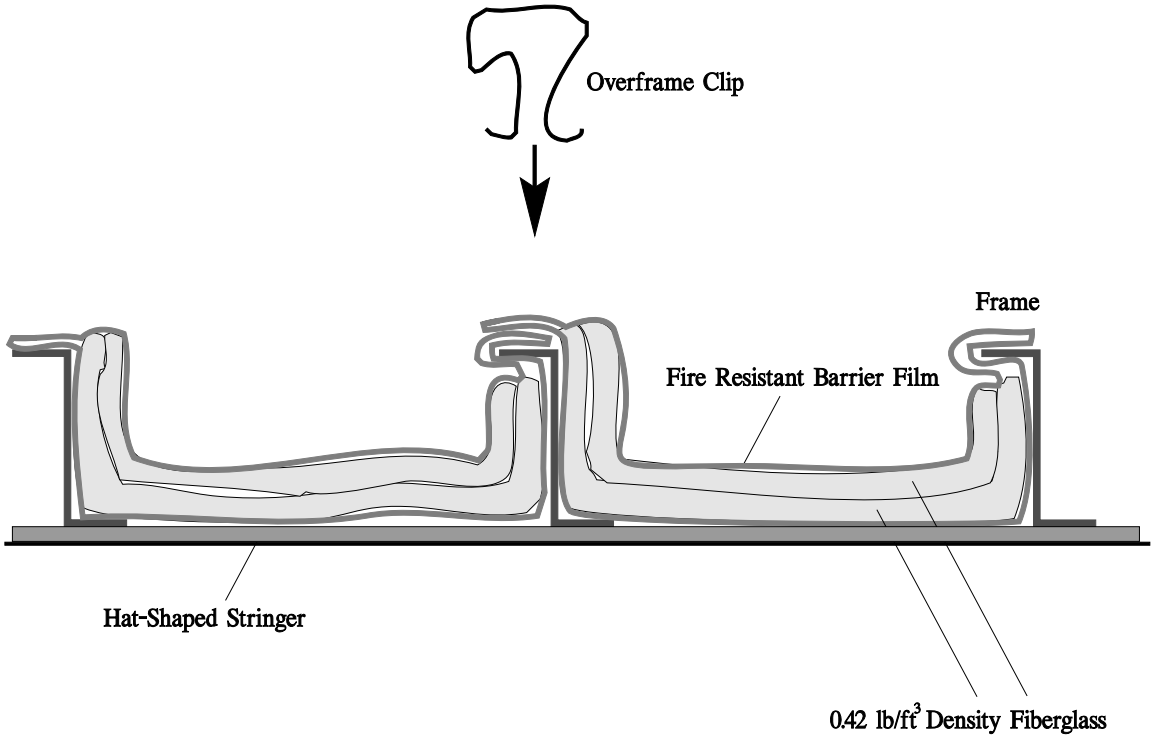

Figure 1-10. Encapsulating Film System Used in Conjunction with Fiberglass

Appendix 2

Alternative Burner

1. Introduction. Section 25.856 specifies the test method required for compliance, but also allows for "other approved equivalent test requirements." Generally, an equivalent test method is one that produces the same test results as the standard method, for any material tested. Because there are several parameters that dictate the test results for a given material, it is not a simple matter to define an equivalent method. However, the FAA has developed an alternative to the burner discussed in part 25, Appendix F, part VII, that eliminates the most significant sources of variability in test results. This 'Next Generation' burner, or NexGen, relies on constant air mass flow and does not involve motor driven accessories.

2. Use of this alternative burner test method. The test method in this appendix is intended to be adopted in total, if it is used. Following one section of the test method from this appendix and another section of the test method from Appendix F, part VII, is not covered by this AC. If an applicant proposes to use sections from more than one version of a test method to show compliance, the applicant must first obtain approval from the cognizant FAA Aircraft Certification Office and an issue paper will likely be required. The applicant's request should be coordinated with the Transport Airplane Directorate's Transport Standards Staff.

3. Additional specifications. Note that this appendix specifies several parameters that are not covered in Appendix F, part VII. These are parameters that may have an influence on calibration or test results, although the exact effects have not been established. Because the NexGen burner eliminates the major sources of performance variation found in the standard burner, the influence (or potential influence) of secondary parameters is more easily seen. In order to provide the most reproducible results, we have eliminated as much variability as practicable.

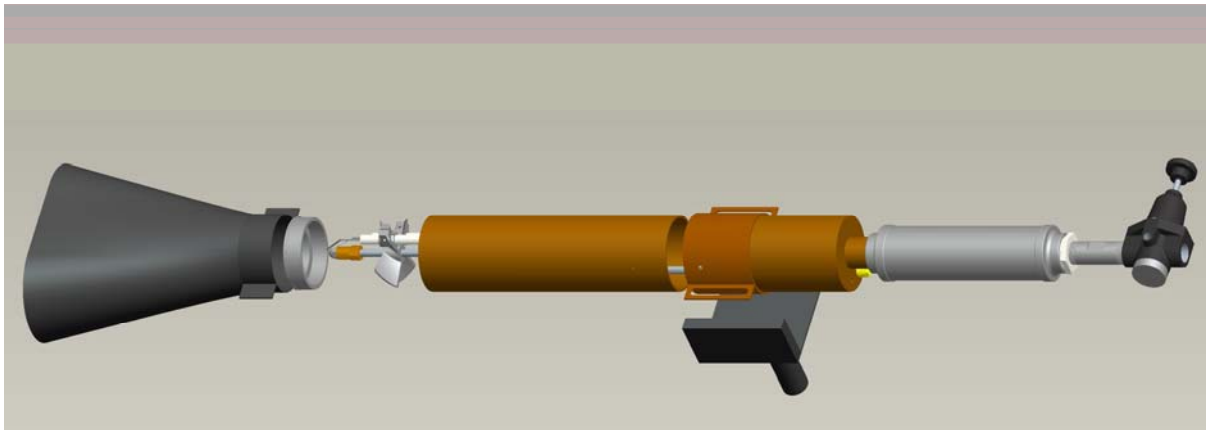

Figure 2-1. General Arrangement

4. General Description. The NexGen burner consists of a pressurized air and fuel supply to replace the existing motor driven pump and blower. The burner utilizes a sonic orifice to control the quantity of air supplied to the flame. This approach produces very consistent results compared with the standard burner. The components upstream of the air/fuel inlets (e.g., stators, igniter, burner cone) are the same as discussed in Appendix F, part VII. See figure 2-1 for the general arrangement. A more detailed description of the burner is available at: http://www.fire.tc.faa.gov/reports/reports.asp.

5. Air supply. The air metering device supplied with the NexGen burner is a sonic orifice, which requires a constant, steady supply of compressed air in order to deliver a fixed mass flow rate of air to the burner. The attached pressure regulator comes ready to attach to the lab air supply via a 1" national pipe thread female connection. The compressed air supply required must provide a steady pressure of at least 57 pounds per square inch gauge (psig) in a 1" line, with a mass flow of at least 63 standard cubic feet per minute. The compressor must also maintain this pressure for extended periods of time (6 minute max test time). These figures are minimums, however, and a certain design factor should be added so that the equipment is not operated at or beyond its operating capability. An Ingersoll Rand SSR series, with an Ingersoll Rand Hydroguard™ refrigerated dryer provides acceptable performance.

The inlet air must also be conditioned prior to reaching the burner. Changes in the density (caused by temperature and water content) of the incoming air can affect the burner exit velocity, which is a critical component of the burnthrough time. Both the temperature and the moisture content can be controlled by installing an in-line heat exchanger followed by a water separator. The heat exchanger uses cool water to remove heat from the air stream, and the water separator will remove any water that has condensed due to cooling. For the heat exchanger, McMaster Carr part number 43865K78 is suitable. For the water separator, McMaster Carr part number 43775K55, is suitable.

6. Fuel supply. The fuel nozzle installed in the burner requires a steady supply of pressurized fuel at 120 psig. The suggested method of fuel pressurization is to construct a pressure vessel capable of containing fuel and compressed gas (nitrogen or air) at 120 psig. The layout of the fuel supply system is shown in figure 2-2. The use of a mechanical pump driven by an electric motor may also work, but should be shown to provide an equivalent level of performance to the pressurized fuel tank system.

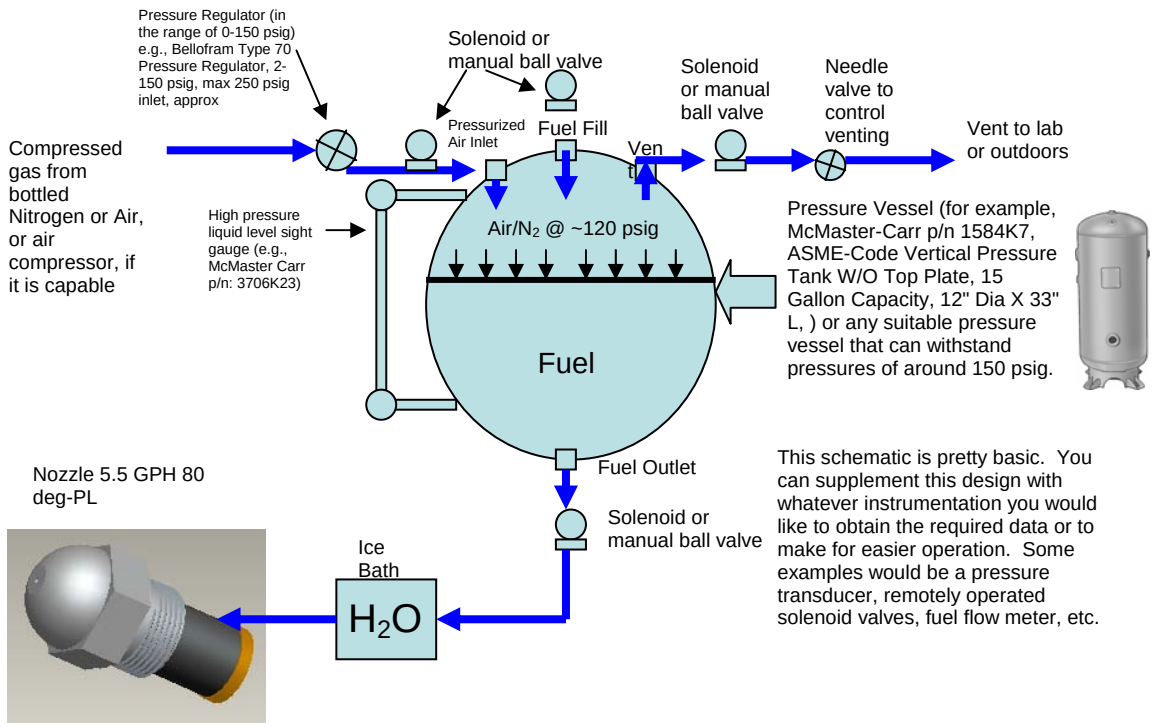

Figure 2-2. Fuel System Schematic

7. Fuel and Air Temperature. Experience has shown that the temperature of the fuel and air can influence test results to some degree. This is really only critical with materials with burnthrough performance that is relatively close to the pass/fail criteria. Nonetheless, the consistency of the tests can be improved if the air and fuel temperature is controlled. A schematic of a heat exchange system can be seen in figure 2-3.

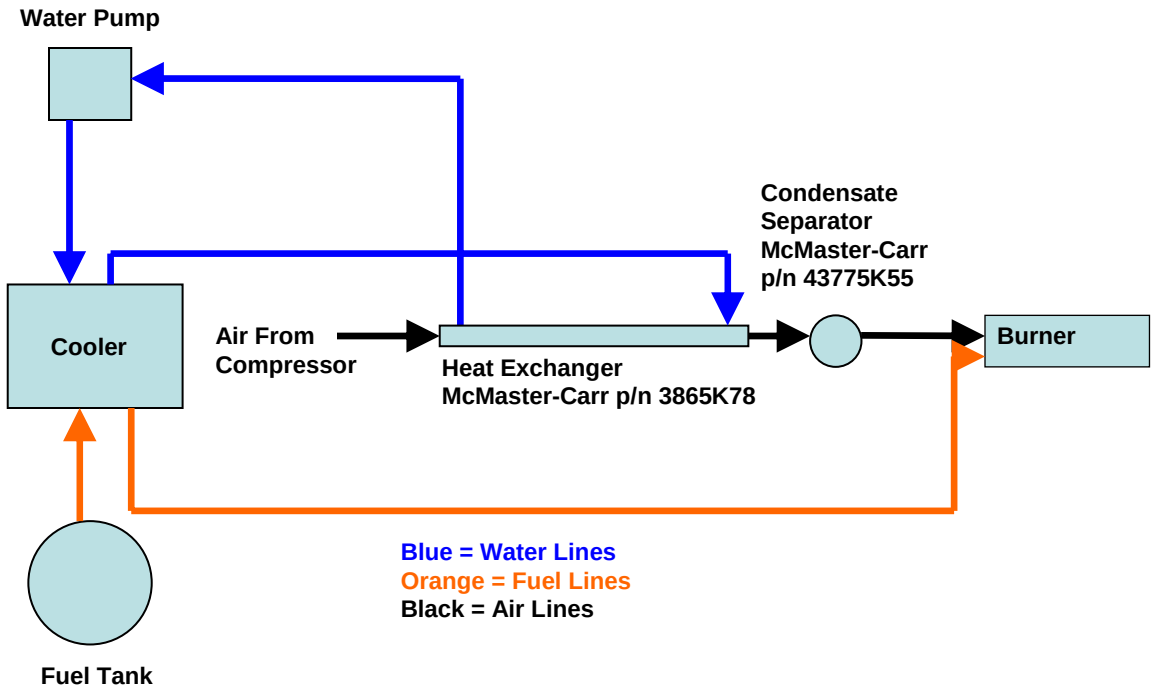

Figure 2-3. Heat Exchange System Schematic

a. Fuel temperature. The fuel temperature must initially be between 32°- 40°F, and must not vary more than 10°F for the length of a test. A 5° variation is not unusual. This can be achieved by using an ice bath to chill the incoming fuel, and using insulation to cover all of the fuel lines and gauges to protect them from flame radiation.

b. Air temperature. The air temperature should not vary outside of the 40°-60°F range during the length of a test. This can be achieved by using the in-line heat exchanger discussed in paragraph 4, above. If the water temperature is not cold enough to attain this temperature range, the water can be run through the same ice bath to further cool the incoming air. Run the air for 5-10 minutes before testing, to ensure that the air has reached a quasi-steady temperature, and is well within the 40°- 60°F range during the test. All exposed air lines should be covered in insulation as well, to protect from being heated by burner flame radiation.

8. Fuel and Air Pressure. The pressure of the fuel and air can similarly influence performance. The fuel pressure should be measured just upstream of the fuel temperature measurement point. The fuel pressure should be set to 120 psig. As noted in the air supply discussion above, a minimum continuous 57 psig is necessary for consistent operation.

9. Calibration. When the burner is set up as described above, the heat output of the burner is essentially determined by the fuel and air settings. Therefore, it is not necessary to calibrate the burner for heat flux. It is necessary to confirm proper temperature calibration, because this becomes more a measure of the shape and uniformity of the flame. It may also be useful to periodically check the heat flux calibration, to confirm the consistency of the burner, but this measurement is not required to perform certification tests.