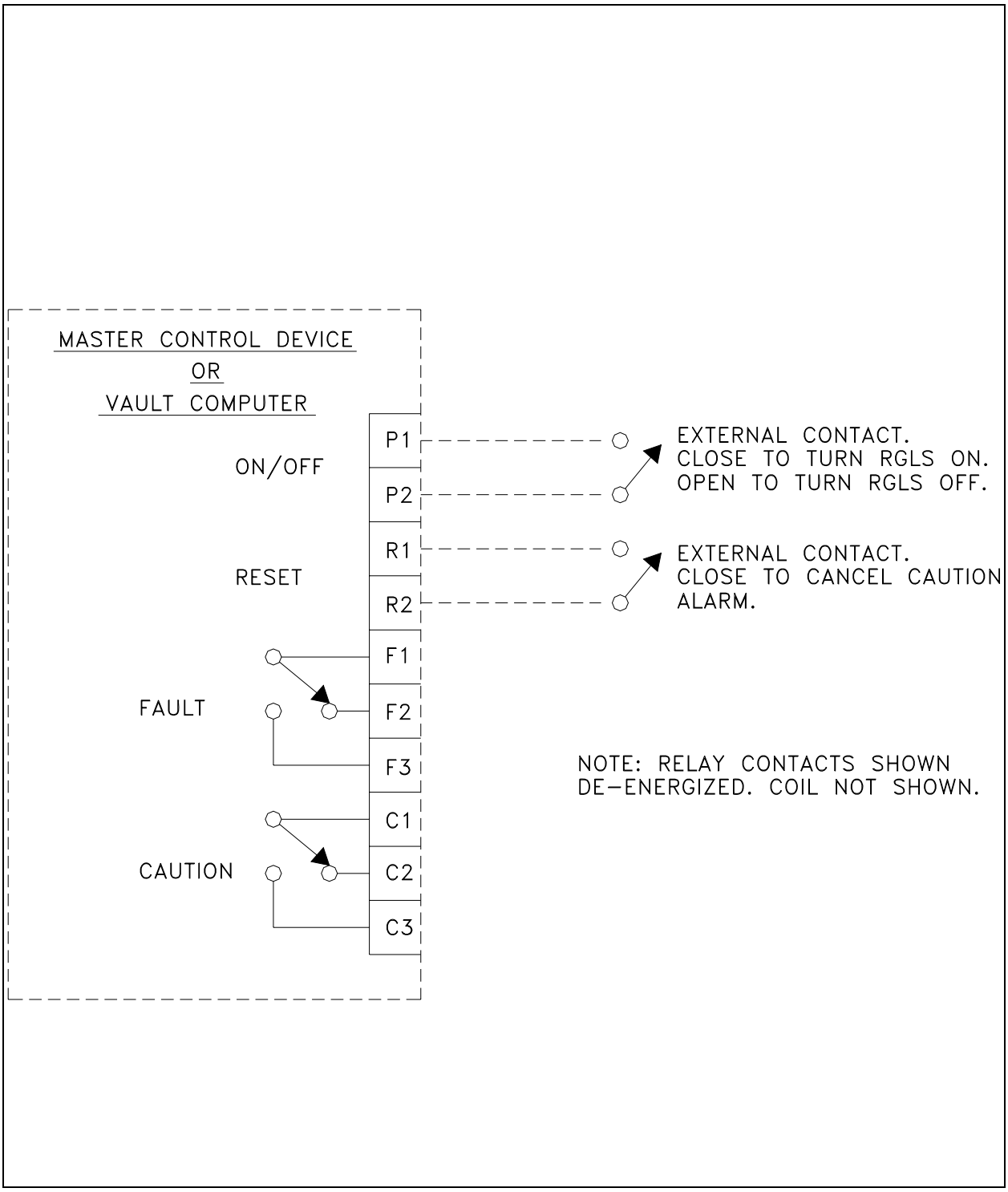

Figure 58. In-Pavement RGL Alarm Signal Connection.

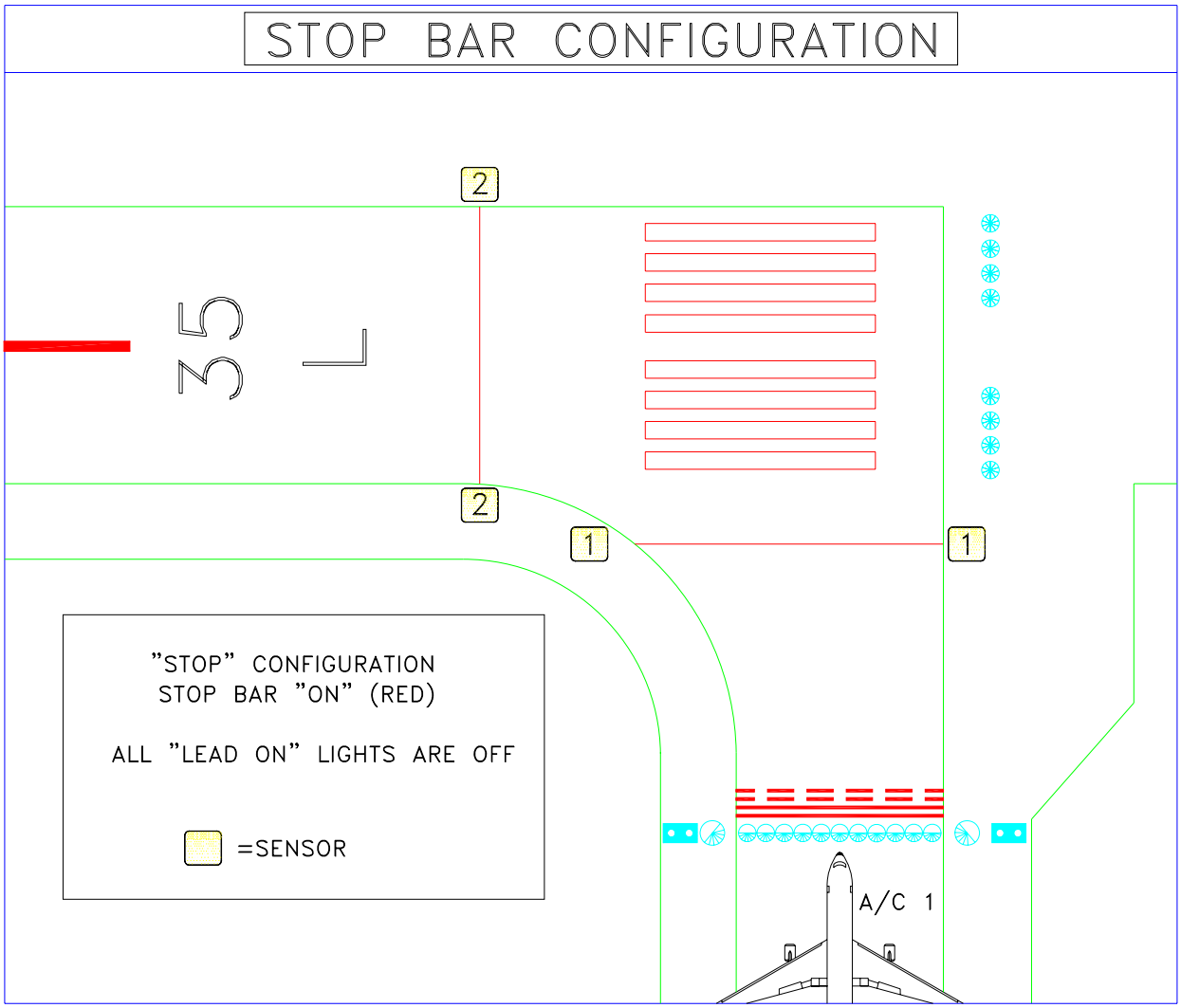

Figure 59. Controlled Stop Bar Design and Operation – "STOP" Configuration.

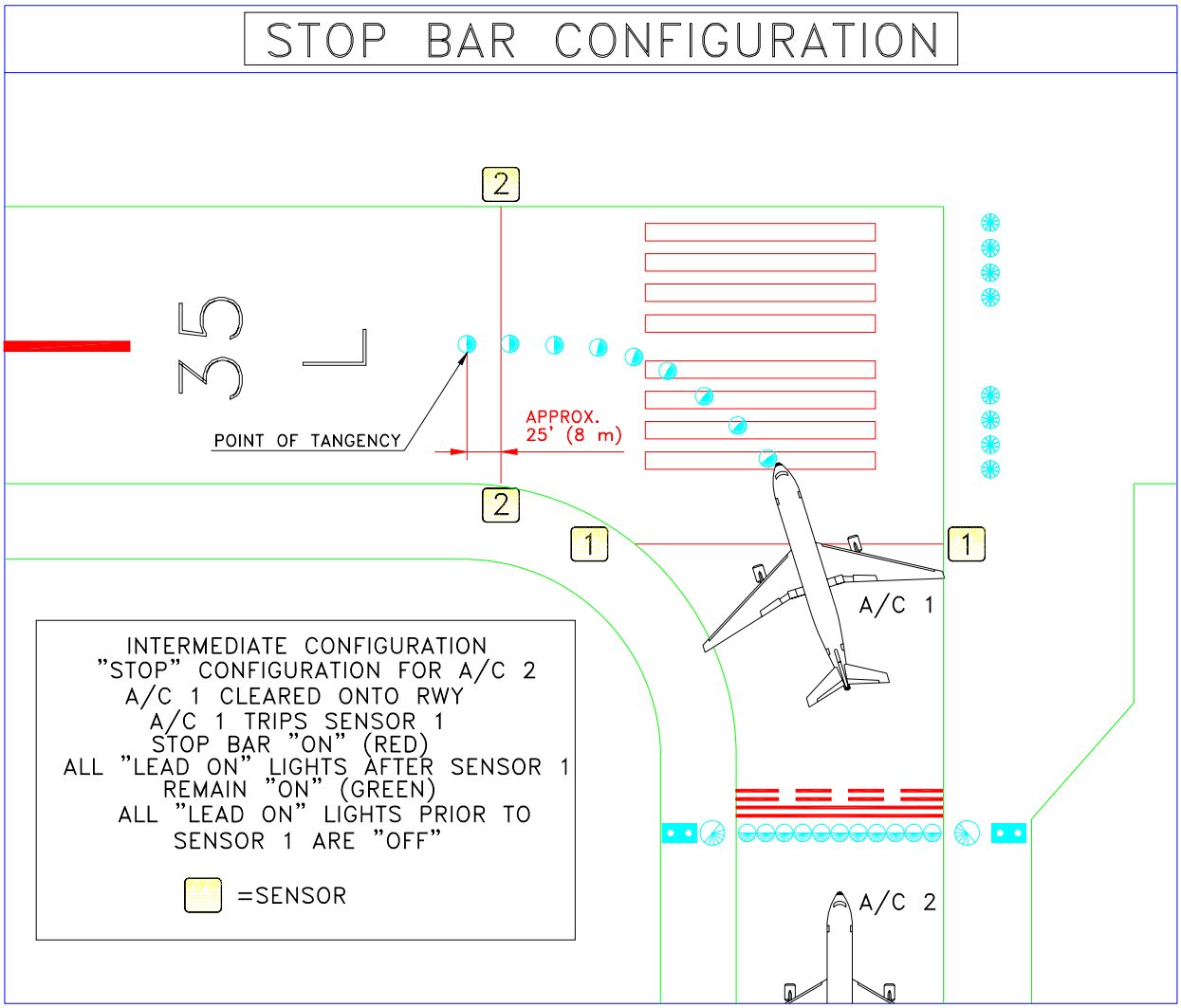

Figure 60. Controlled Stop Bar Design and Operation – Intermediate Configuration.

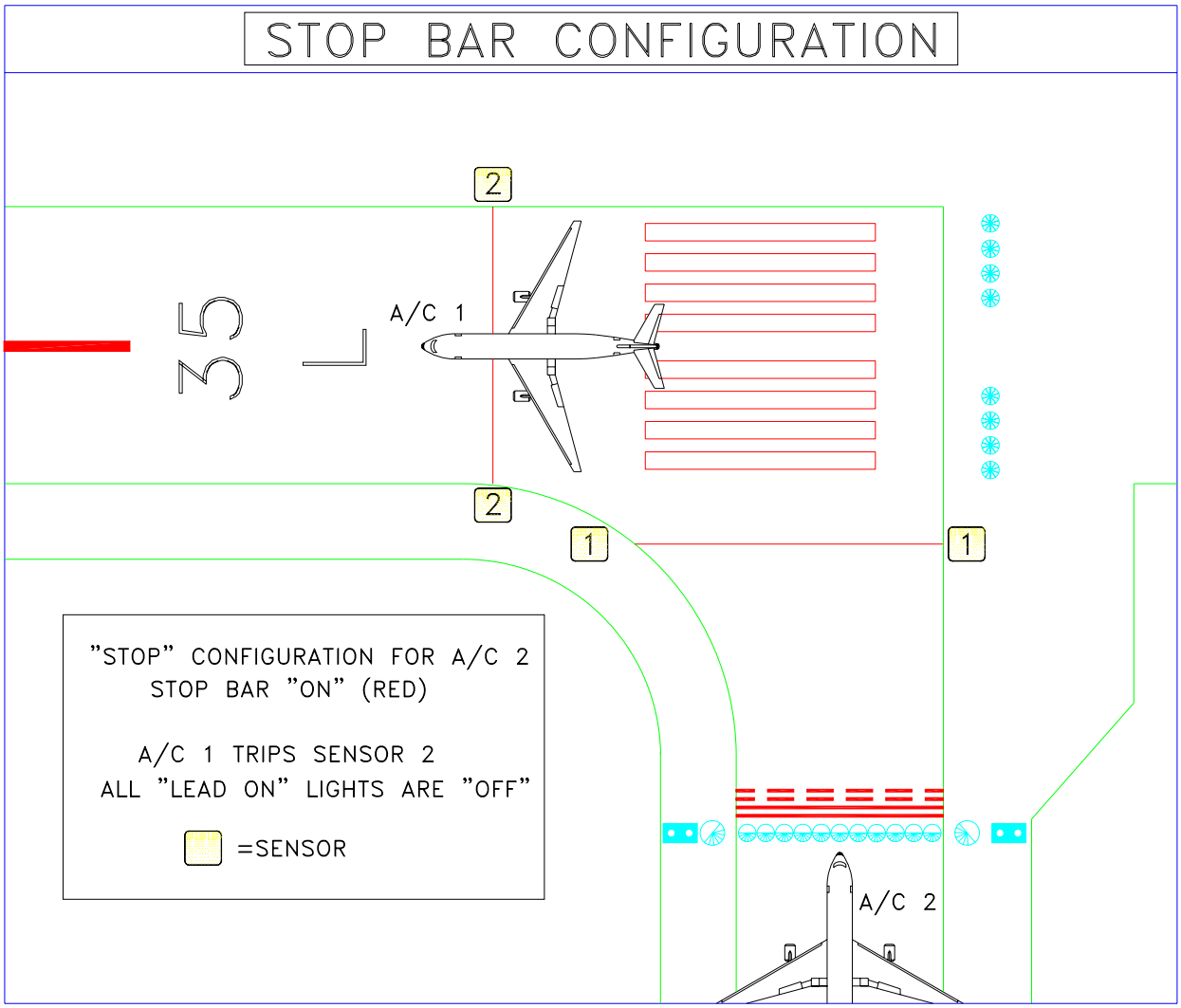

Figure 61. Controlled Stop Bar Design and Operation – "STOP" Configuration for A/C 2.

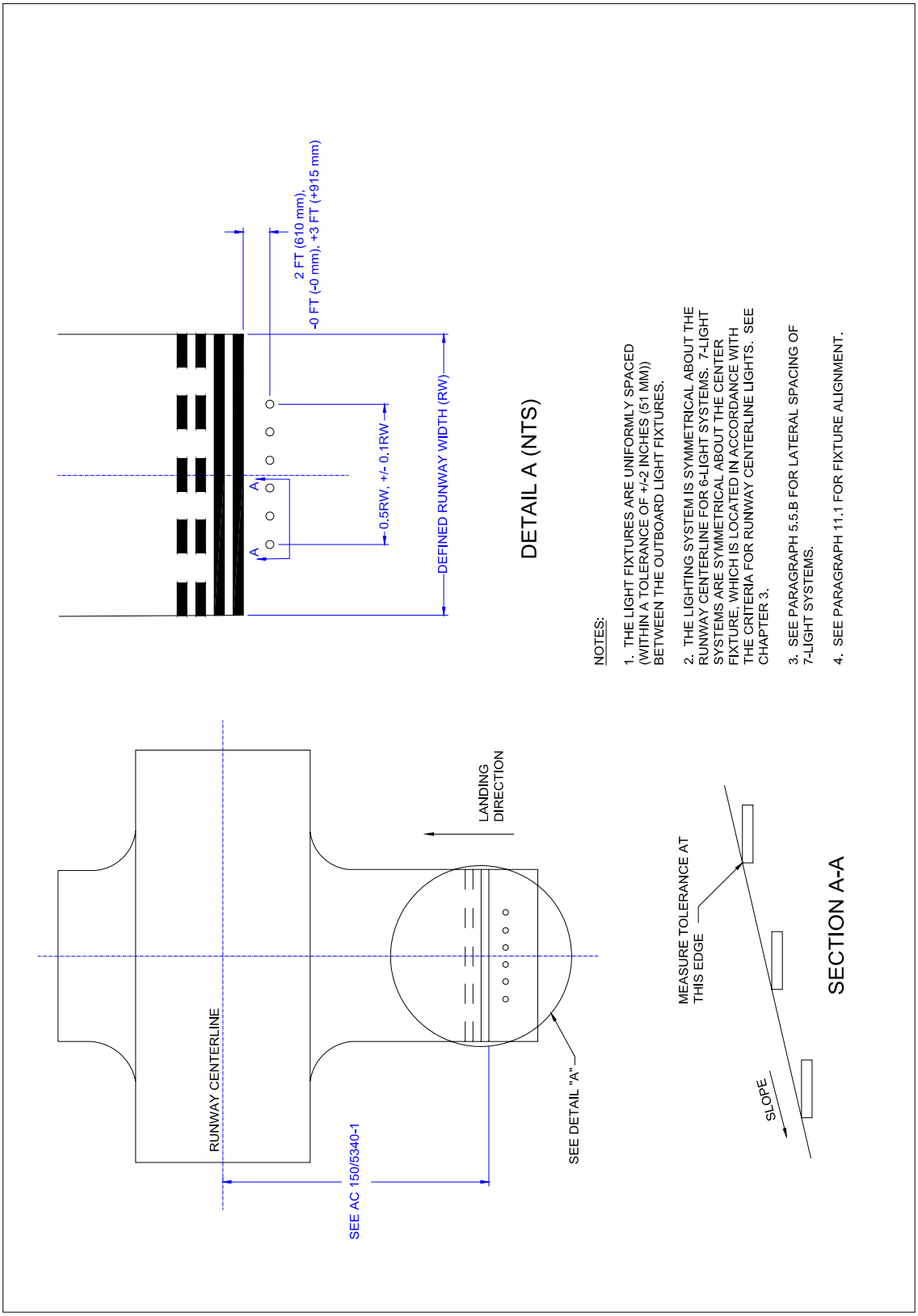

Figure 62. Typical Layout for Land and Hold Short Lights.

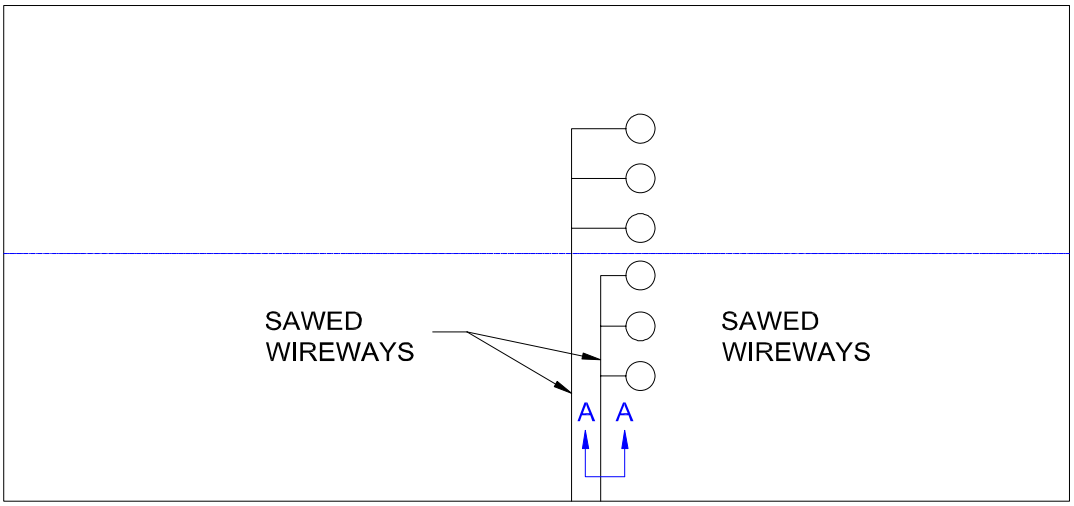

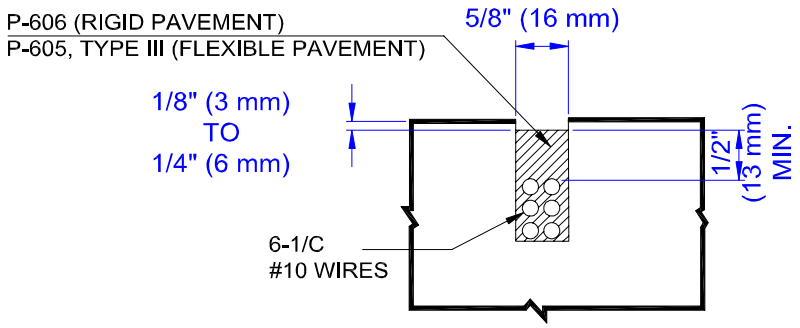

SECTION A-A

GENERAL NOTES

1. THE INSTALLATION DETAILS SHOWN ARE FOR RIGID OR FLEXIBLE PAVEMENT UNLESS OTHERWISE SPECIFIED.

2. THE DIAMETERS AND DEPTHS OF HOLES FOR DIRECT-MOUNTED LIGHTING FIXTURES ARE IN ACCORDANCE WITH FIGURE 64.

3. THE ALIGNMENT OF DRILLED HOLES FOR THE FIXTURES SHOULD NOT VARY MORE THAN 2 INCHES.

4. WHERE WIREWAYS CROSS JOINTS IN RIGID PAVEMENT, THEIR DEPTH IS INCREASED AS SHOWN ON PLANS. SEE FIGURE 64 FOR A TYPICAL DETAIL OF JOINT INTERSECTION.

Figure 63. Typical Wireway Installation Details for Land & Hold Short Lights.

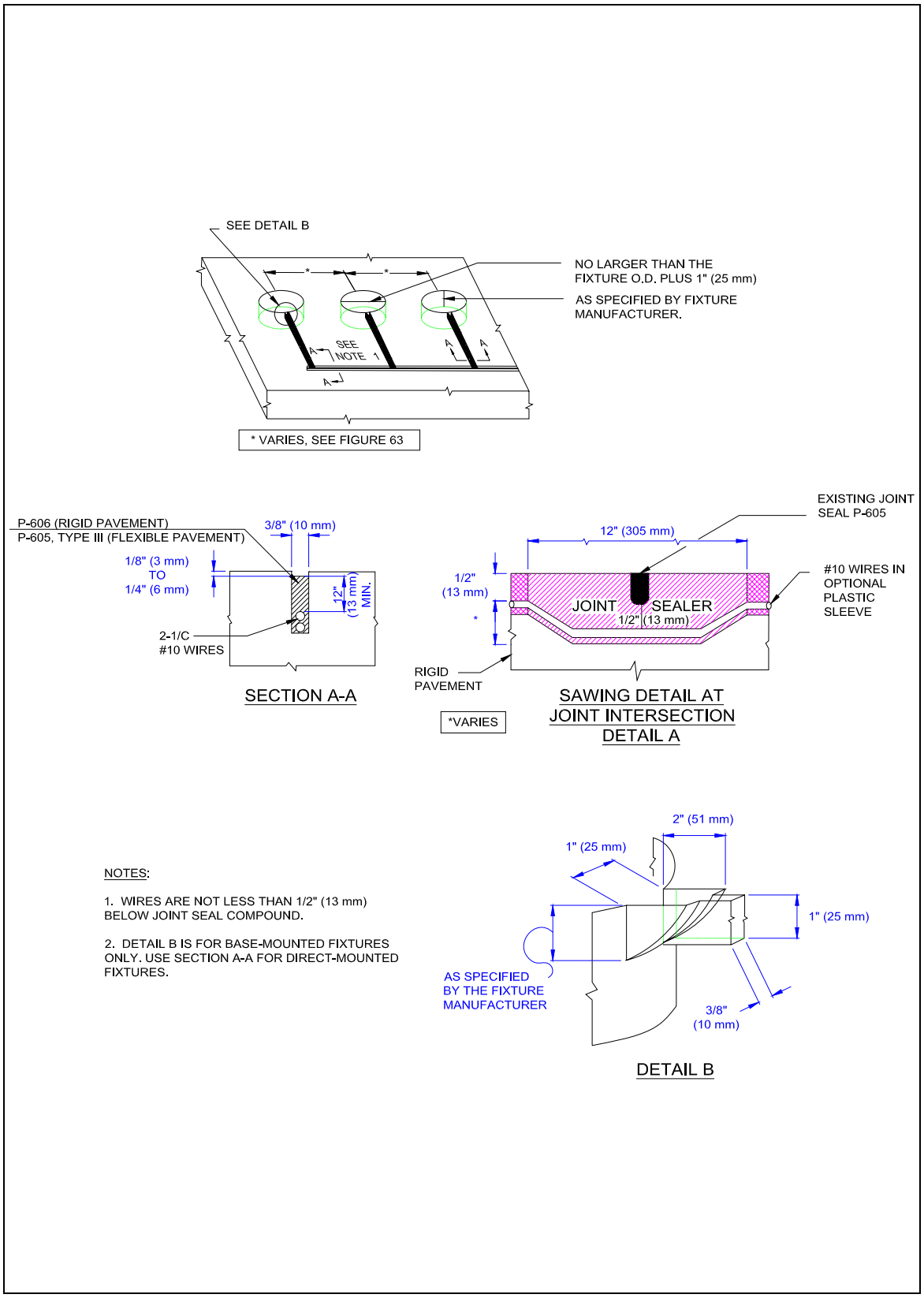

Figure 64. Sawing & Drilling Details for In-pavement Land & Hold Short Lights.

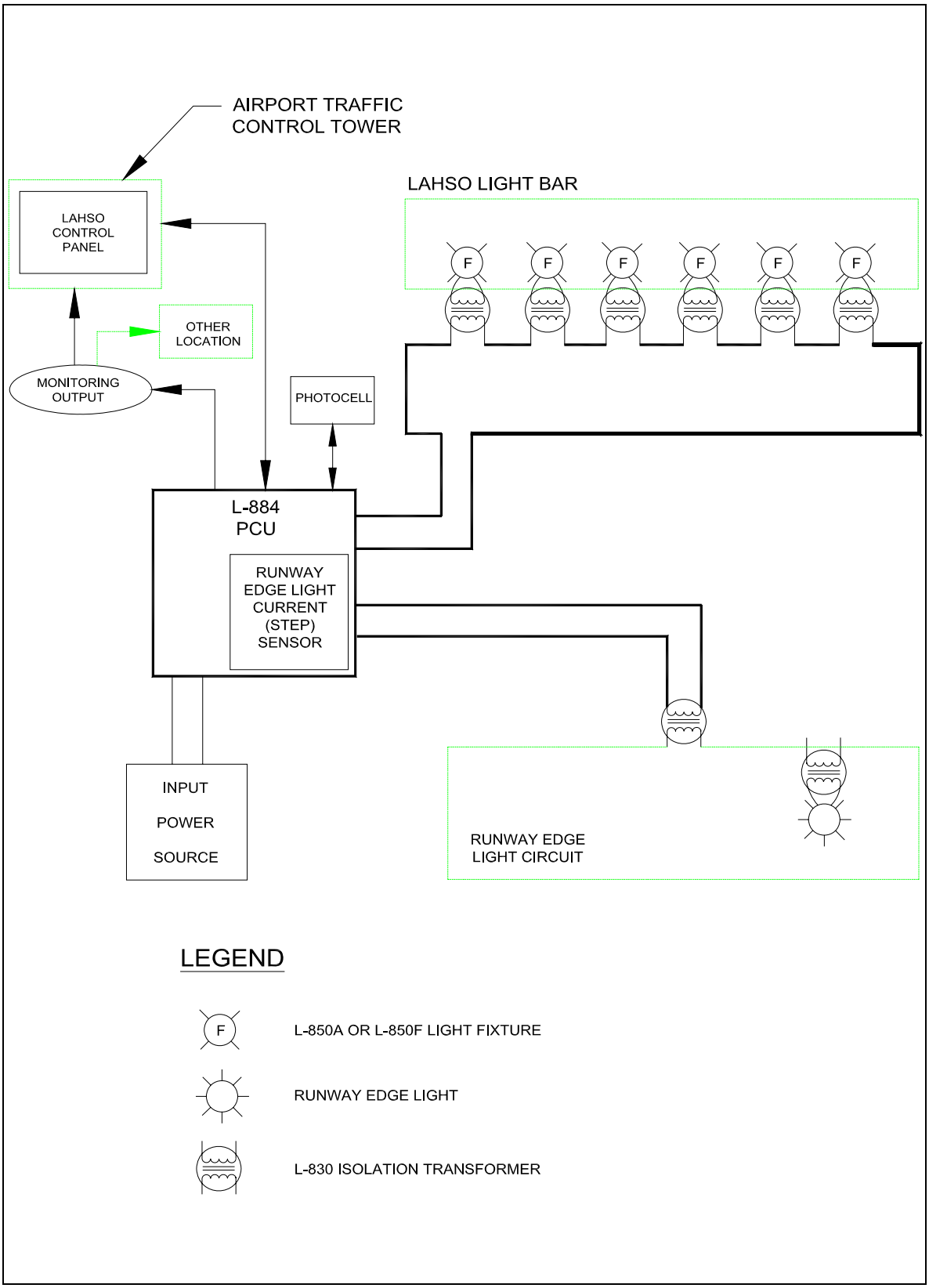

Figure 65. Typical Block Diagram for Land & Hold Short Lighting System.

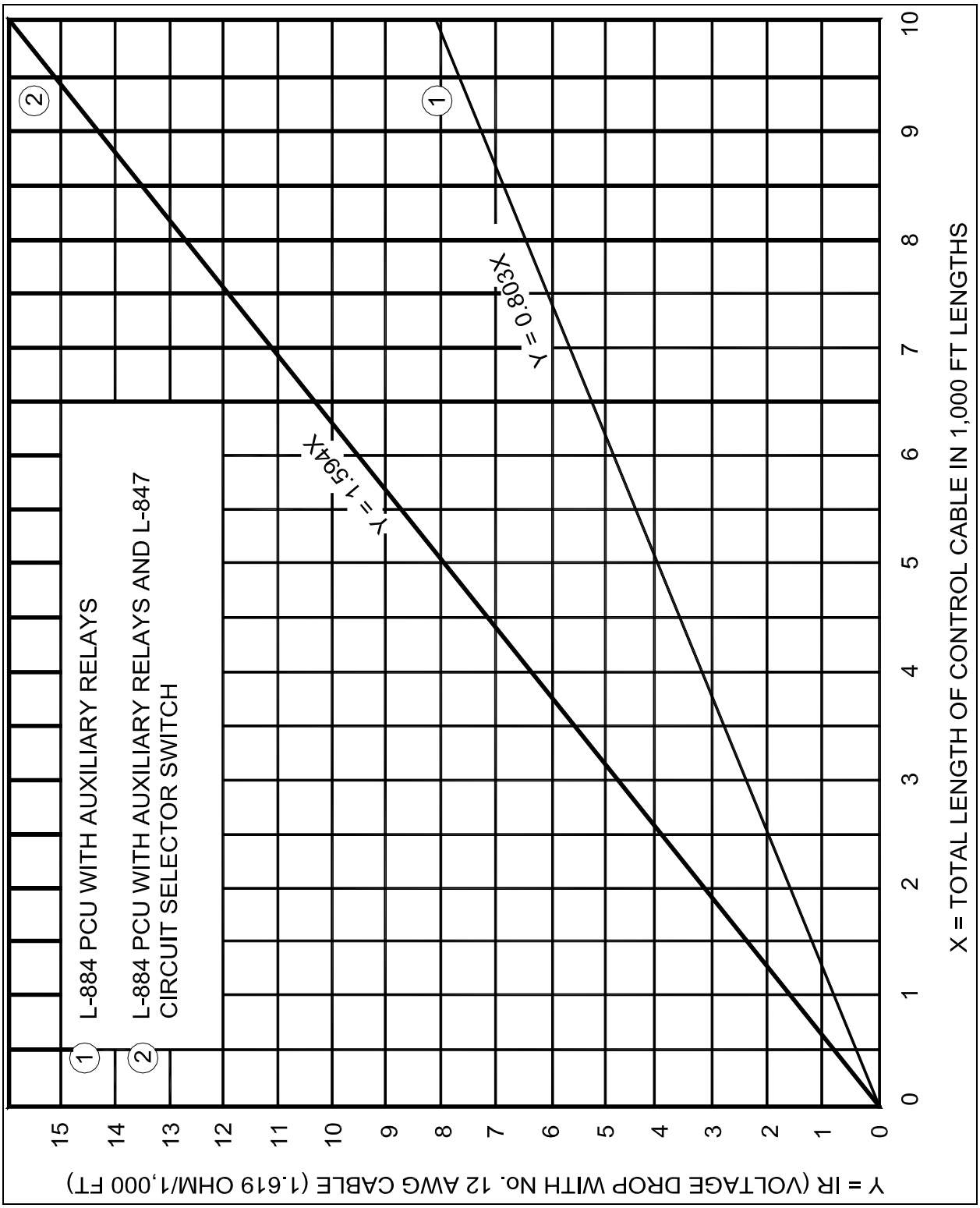

Figure 66. Typical Curve for Determining Maximum Separation Between Vault and Control Panel with 120-volt AC Control.

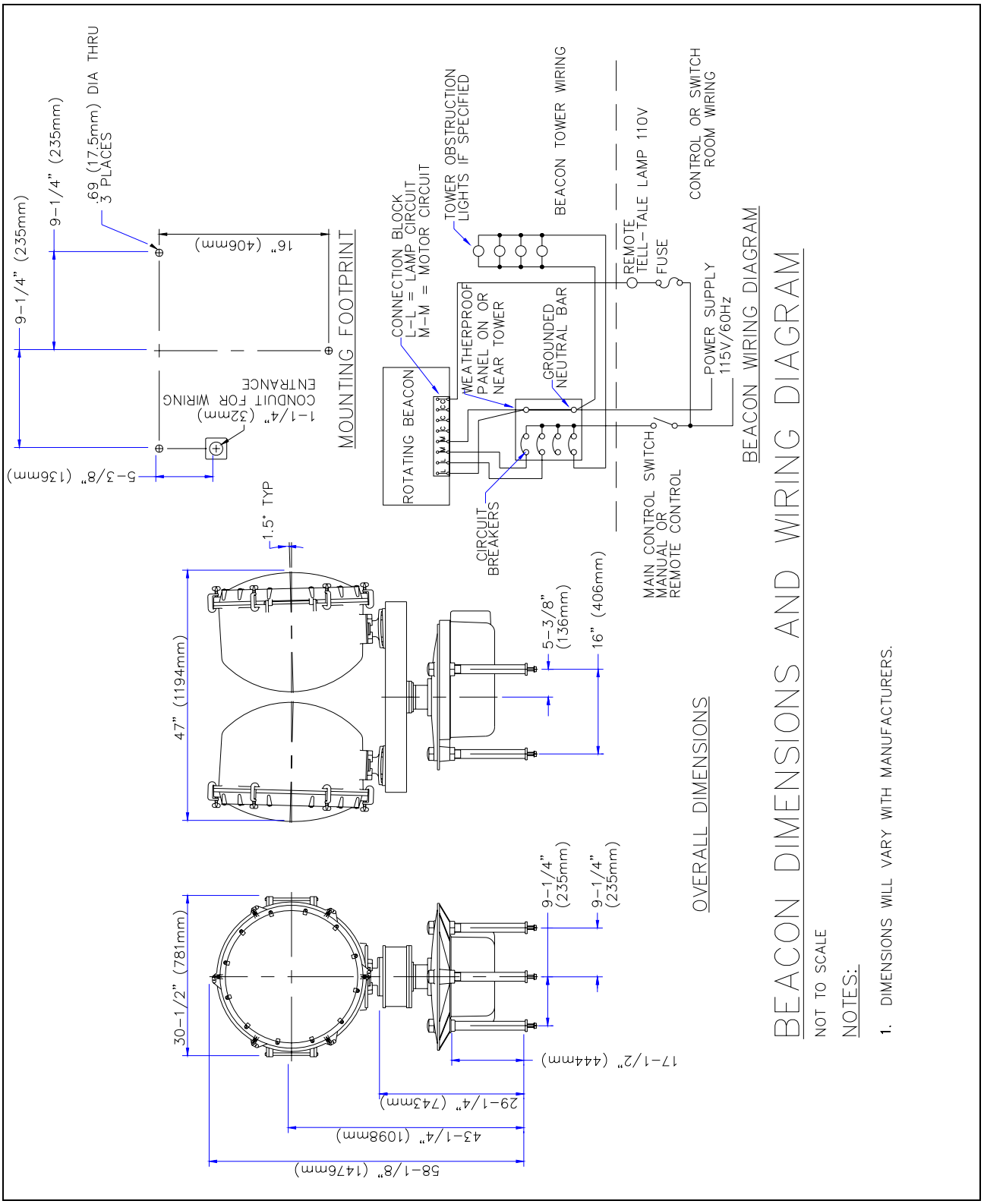

Figure 67. Beacon Dimensions and Wiring Diagram.

COPPER-WIRE, AMERICAN WIRE GAUGE B&S

B&S GAUGE NO.	OHMS PER 1 000 FEET 25°C., 77°F.	AREA CIRCULAR MILS	DIAMETER IN MILS AT 20°C.	APPROXIMATE POUNDS PER 1,000 FEET (305 m)
2	0.1593	66,370	257.6	201
4	0.2523	41,740	204.3	126
6	0.4028	26,250	162.0	79
8	0.6405	16,510	128.5	50
10	1.018	10,380	101.9	31
12	1.619	6,530	80.81	20

Calculations

1. To determine the AWG size wire necessary for a specific connected load to maintain the proper voltage for each miscellaneous lighting visual aid, use the above table and Ohms Law $I = \frac{E}{R}$ as follows:

   a. Example. What size wire will be necessary in a circuit of 120 volts AC to maintain a 2 percent voltage drop with the following connected load which is separated 500 feet from the power supply?

      (1) Lighted Wind Tee Load - 30 lamps, 25 watts each = 750 watts.

      (2) The total operating current for the wind tee is $I = \frac{watts}{volts} = \frac{750}{120} = 6.25\,amperes$.

      (3) Permissible voltage drop for homerun wire is 120 volts x 2% = 2.4 volts.

      (4) Maximum resistance of homerun wires with a separation of 500 feet (1,000 feet (305 m) of wire used) to maintain not more than 2.4 volts drop is $R = \frac{E}{I} = \frac{2.4\,volts}{6.25\,amperes} = 0.384\,ohms$ per 1,000 feet (305 m) of wire.

      (5) From the above table, obtain the wire size having a resistance per 1,000 feet (305 m) of wire that does not exceed 0.384 ohms per 1,000 feet (305 m) of wire. The wire size that meets this requirement is No. 4 AWG wire with a resistance of 0.2523 ohms per 1,000 feet (305 m) of wire.

      (6) By using No. 4 AWG wire in this circuit, the voltage drop is E=IR=6.25-amperes x 0.2523 ohms=1.58 volts which is less than the permissible voltage drop of 2.4 volts.

2. Where it has been determined that it will require an extra large size wire for homeruns to compensate for voltage drop in a 120-volt power supply, one of the following methods should be considered.

   a. A 120/240-volt power supply.

   b. A booster transformer, in either a 120-volt or 120/240-volt power supply, if it has been determined its use will be more economical.

Figure 68. Calculations for Determining Wire Size.

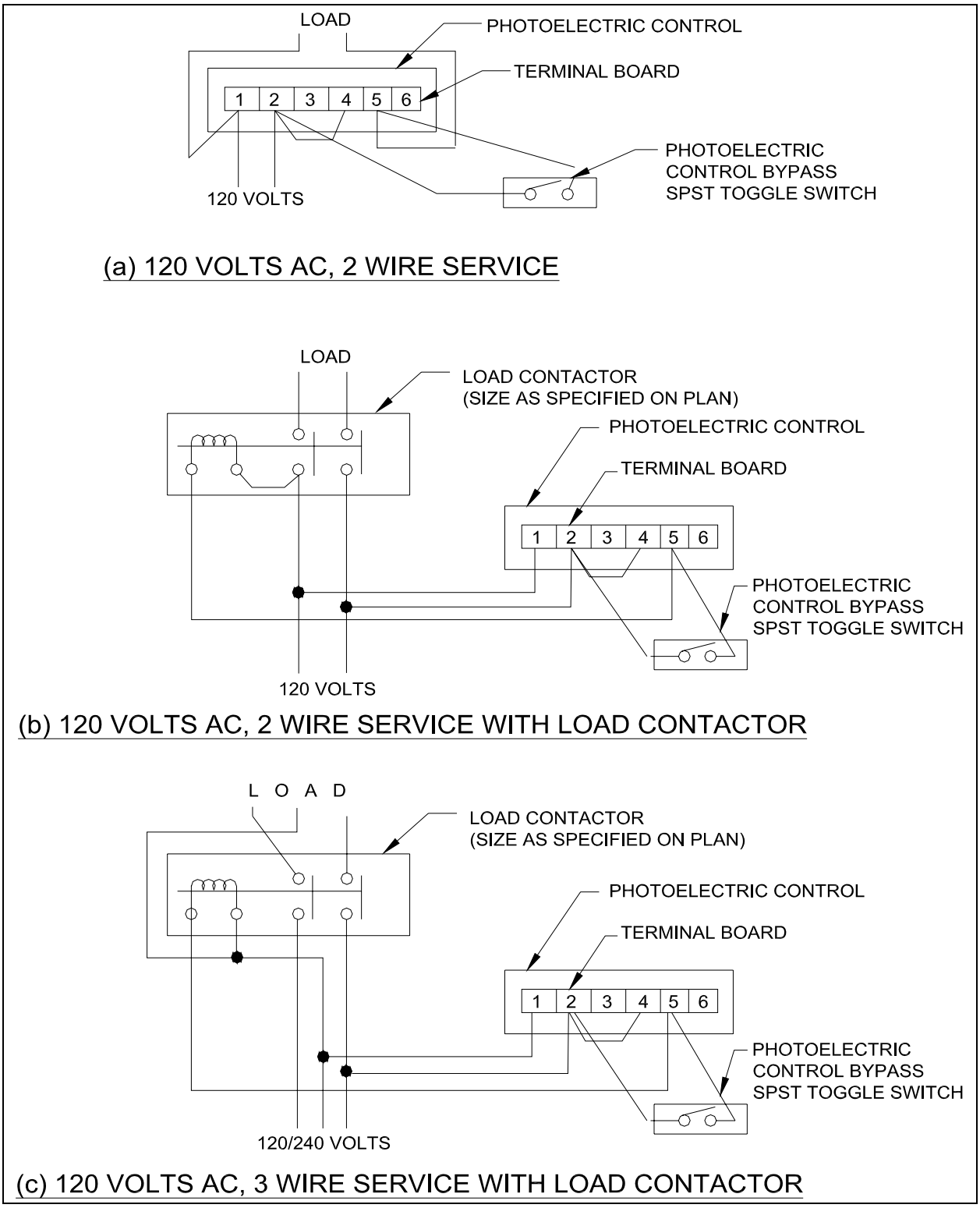

Figure 69. Typical Automatic Control.

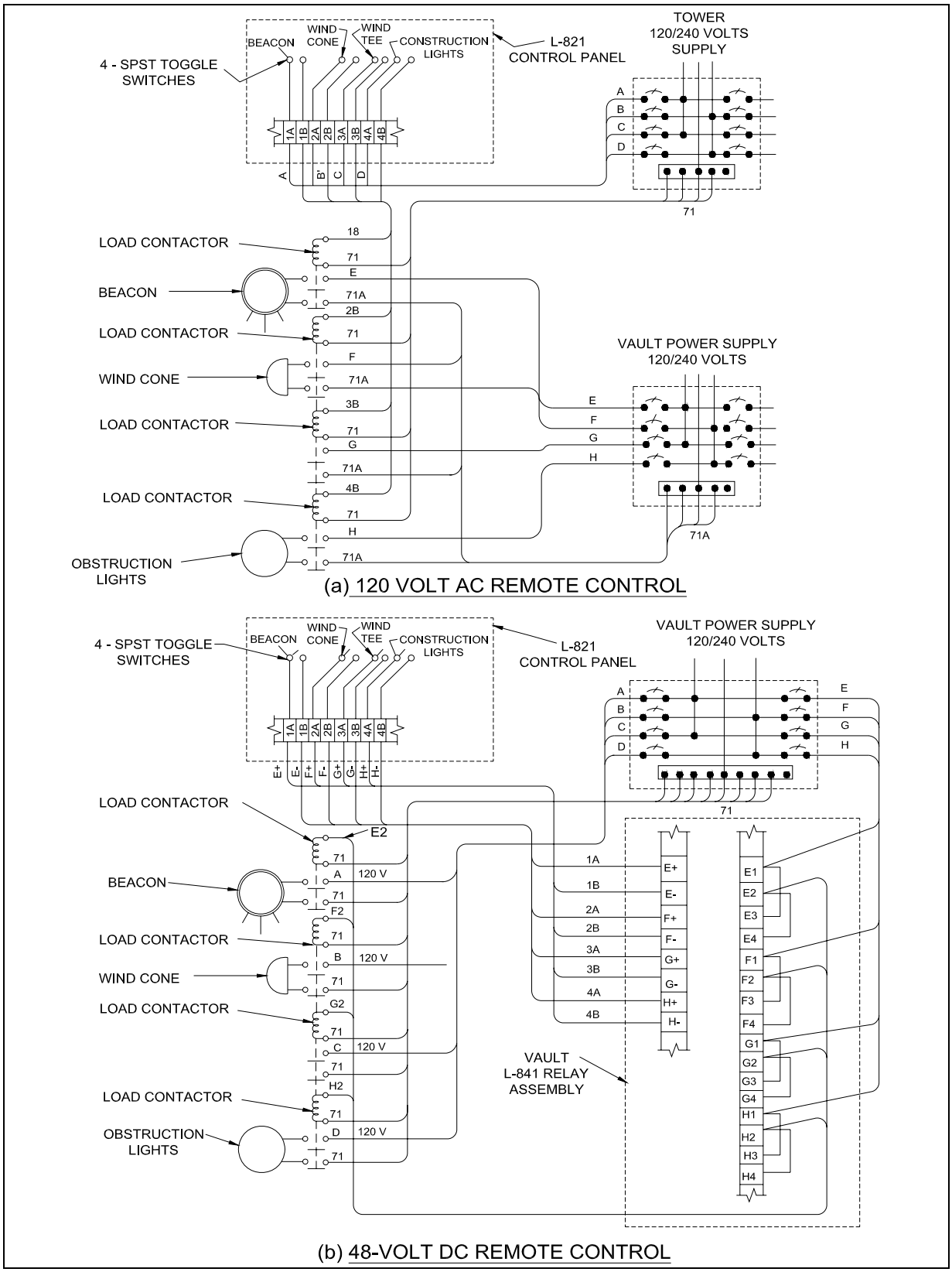

Figure 70. 120-Volt AC and 48-Volt DC Remote Control.

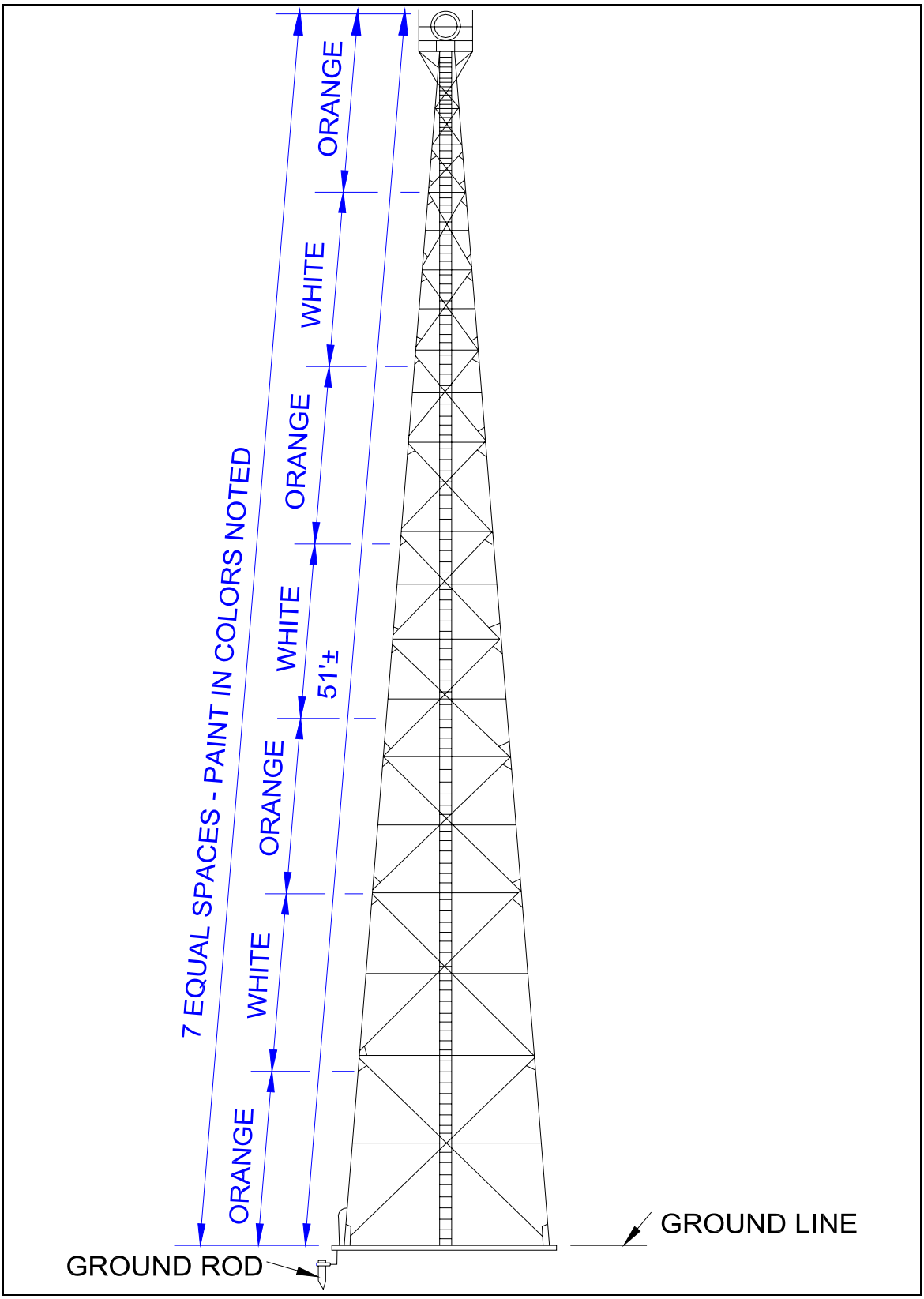

Figure 71. Typical Structural Beacon Tower.

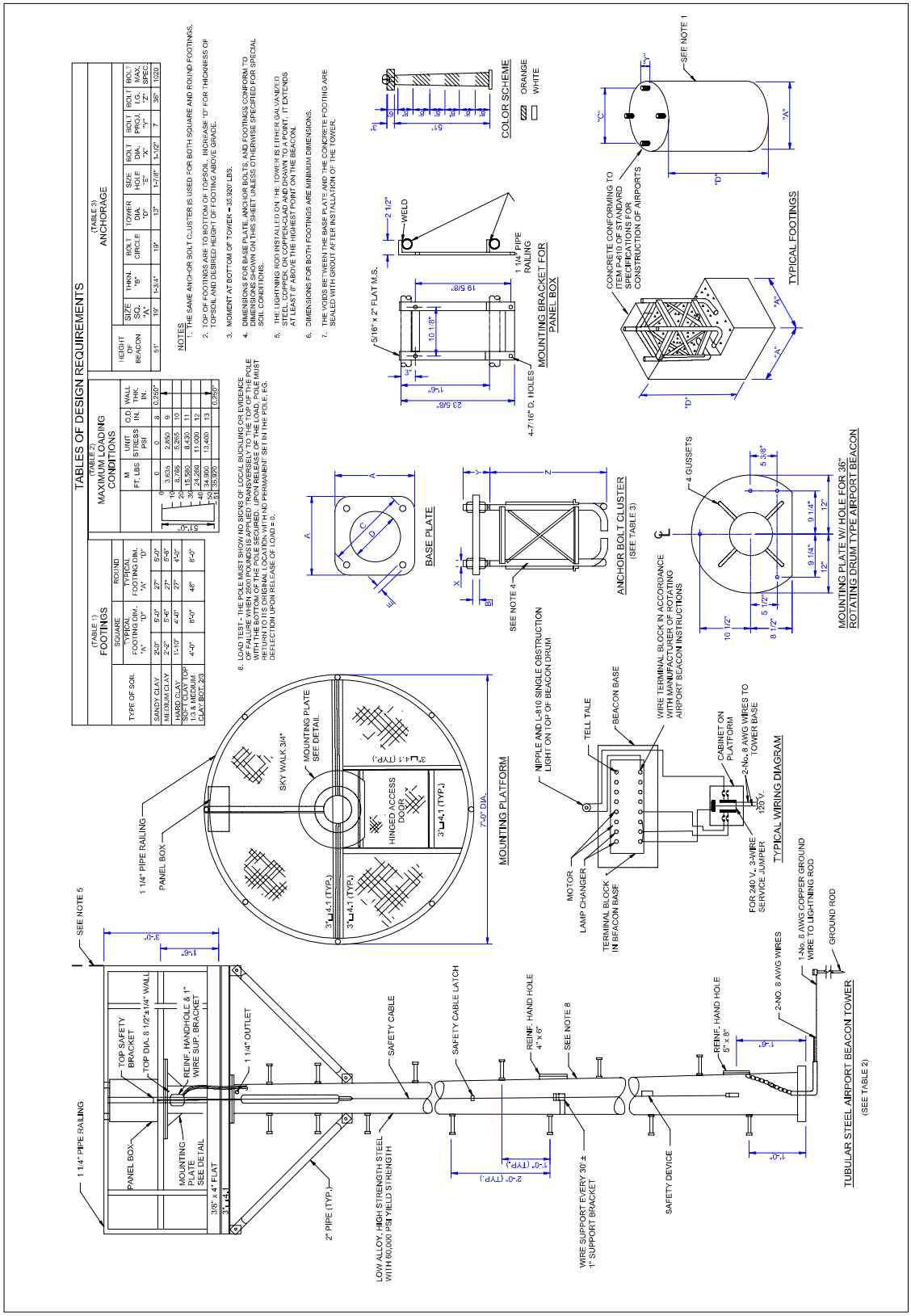

Figure 72. Typical Tubular Steel Beacon Tower.

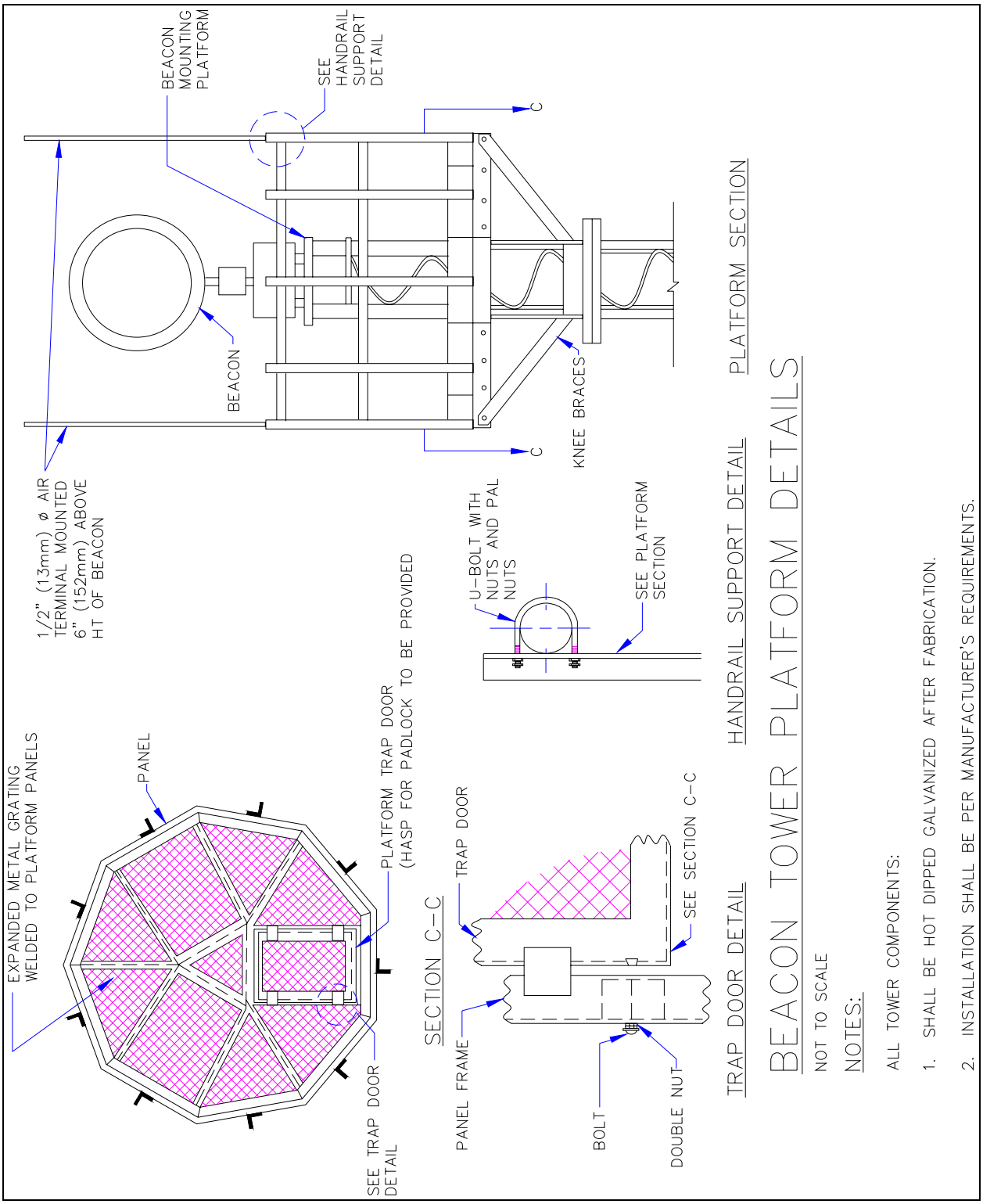

Figure 73. Typical Pre-fabricated Beacon Tower Structure.

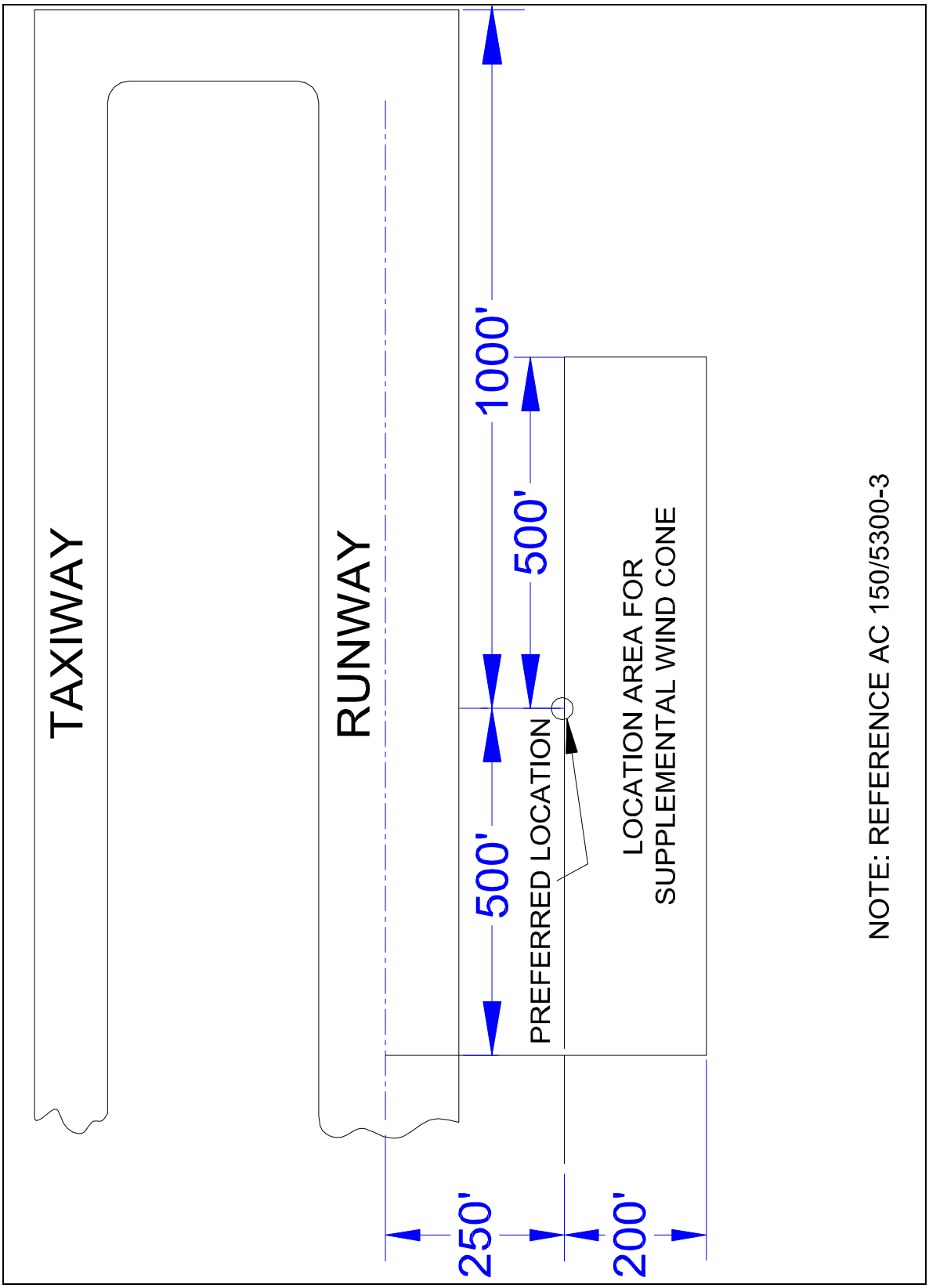

Figure 74. Typical Location of Supplemental Wind Cone.

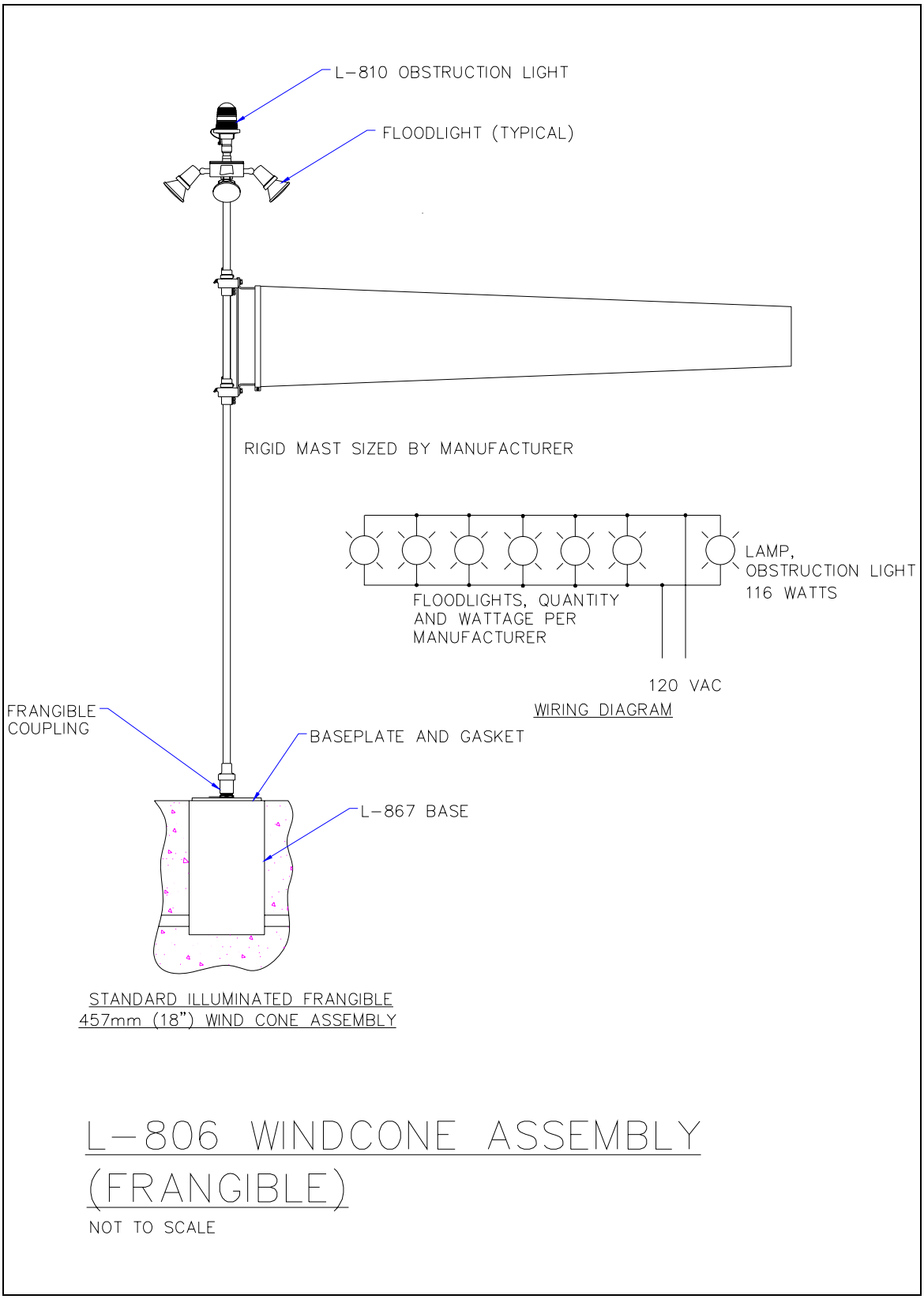

Figure 75. Externally Lighted Wind Cone Assembly (Frangible).

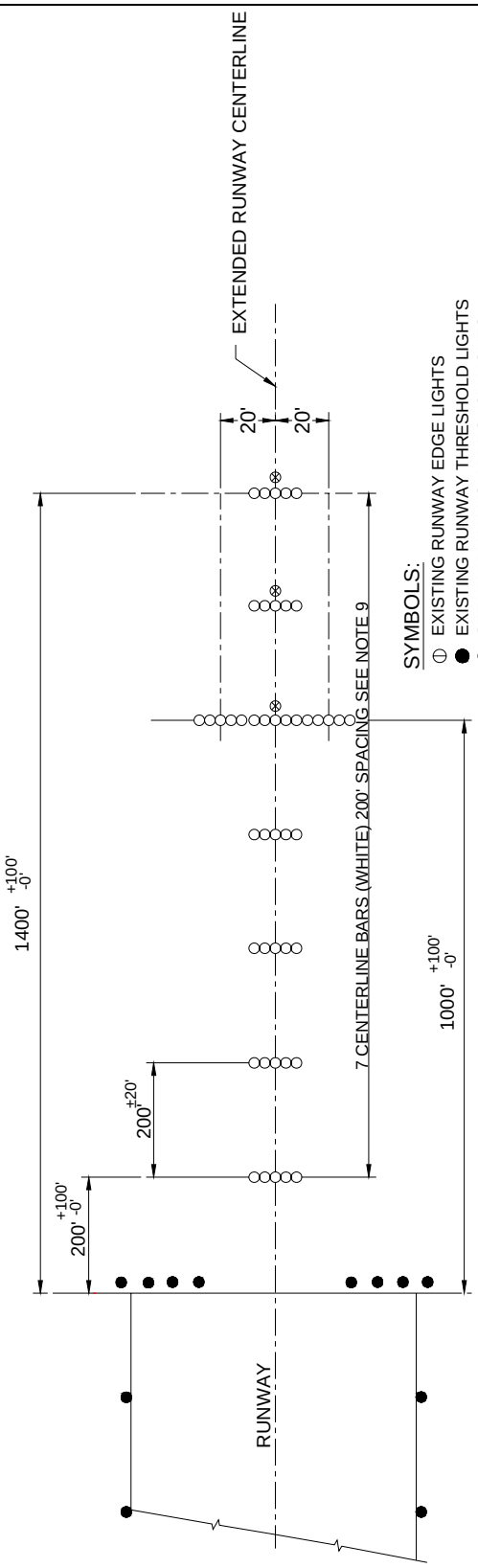

SYMBOLS:

- EXISTING RUNWAY EDGE LIGHTS
- EXISTING RUNWAY THRESHOLD LIGHTS
- STEADY BURNING APPROACH LIGHTS
- SEQUENCED FLASHING LIGHTS

NOTES:

1. THE OPTIMUM LOCATION OF THE APPROACH LIGHTS IS IN A HORIZONTAL PLANE AT RUNWAY END ELEVATION. PROVIDE AT LEAST THREE CONSECUTIVE LIGHT BAR STATIONS IN A SLOPING SEGMENT OF THE SYSTEM. THE SLOPING SEGMENT MAY START AT THE FIRST LIGHT BAR AND EXTEND TO THE END OF SYSTEM OR MAY BE PRECEDED BY A HORIZONTAL SEGMENT OR FOLLOWED BY EITHER A HORIZONTAL OR NEGATIVE SLOPING SEGMENT.
2. A MAXIMUM 2 PERCENT UPWARD LONGITUDINAL SLOPE TOLERANCE MAY BE USED TO RAISE THE LIGHT PATTERN ABOVE OBJECTS WITHIN ITS AREA.
3. A MAXIMUM 1 PERCENT DOWNWARD LONGITUDINAL SLOPE TOLERANCE MAY BE USED TO REDUCE THE HEIGHT OF SUPPORTING STRUCTURES.
4. ALL STEADY BURNING AND FLASHING LIGHTS ARE AIMED WITH THEIR BEAM AXES PARALLEL TO THE RUNWAY CENTERLINE AND INTERCEPTING AN ASSUMED 3' GLIDE SLOPE (INTERCEPTING THE RUNWAY 1000 FEET FROM THE LANDING THRESHOLD) AT A HORIZONTAL DISTANCE OF 1600 FEET IN ADVANCE OF THE LIGHT.
5. ALL OBSTRUCTIONS AS DETERMINED BY APPLICABLE CRITERIA (14CFR PART 77) FOR DETERMINING OBSTRUCTIONS TO AIR NAVIGATION ARE LIGHTED AND MARKED AS REQUIRED.
6. ALL STEADY BURNING AND FLASHING LIGHTS IN THE SYSTEM EMIT WHITE LIGHT.
7. INTENSITY CONTROL IS PROVIDED FOR THE STEADY BURNING LIGHTS.
8. THE THREE FLASHING LIGHTS FLASH IN SEQUENCE.
9. THE MALS LIGHT BAR CLOSEST TO THE RUNWAY THRESHOLD IS LOCATED AT A DISTANCE OF 200' $^{+100'}_{-0'}$. ALL OTHER LIGHT BARS SHOULD BE INSTALLED AT 200' INTERVALS WITH A ±20' TOLERANCE AT EACH LIGHT BAR STATION. THE ABOVE TOLERANCES MAY BE USED WHERE IT IS IMPRACTICAL TO INSTALL LIGHT BARS AT THE OPTIMUM LOCATIONS.
10. THE MINIMUM LAND REQUIREMENTS FOR MALSF IS AN AREA 1600' IN LENGTH BY 400' WIDE.
11. PROVIDE A CLEAR LINE OF SIGHT TO ALL LIGHTS OF THE SYSTEM FROM ANY POINT ON A SURFACE $\frac{1}{2}$ ' BELOW A 3' GLIDE PATH, INTERSECTING THE RUNWAY 1000' FROM THE LANDING THRESHOLD.

Figure 76. Typical Layout for MALSF.

NOTES

1. THE OPTIMUM LOCATION FOR EACH LIGHT UNIT IS IN LINE WITH THE RUNWAY THRESHOLD AT 40 FT FROM THE RUNWAY EDGE.

2. A 90 FT UPWIND AND A 40 FT DOWNWIND LONGITUDINAL TOLERANCE IS PERMITTED FROM THE RUNWAY THRESHOLD IN LOCATING THE LIGHT UNITS.

3. THE LIGHT UNITS SHALL BE EQUALLY SPACED FROM THE RUNWAY CENTERLINE. WHEN ADJUSTMENTS ARE NECESSARY THE DIFFERENCE IN THE DISTANCE OF THE UNITS FROM THE RUNWAY CENTERLINE SHALL NOT EXCEED 10 FT.

4. THE BEAM CENTERLINE (AIMING ANGLE) OF EACH LIGHT UNIT IS AIMED 15 DEGREES OUTWARD FROM A LINE PARALLEL TO THE RUNWAY CENTERLINE AND INCLINED AT AN ANGLE 10 DEGREES ABOVE THE HORIZONTAL. IF ANGLE ADJUSTMENTS ARE NECESSARY, PROVIDE AN OPTICAL BAFFLE AND CHANGE THE ANGLES TO 10 DEGREES HORIZONTAL AND 20 DEGREES VERTICAL.

5. LOCATE THE REIL EQUIPMENT A MINIMUM DISTANCE OF 40 FT FROM OTHER RUNWAYS AND TAXIWAYS.

6. IF REILS ARE USED WITH PAPI-2, INSTALL REILS AT 75 FT FROM THE RUNWAY EDGE. WHEN INSTALLED WITH OTHER FACILITIES REILS SHALL BE INSTALLED AT 40 FT FROM THE RUNWAY EDGE.

7. THE ELEVATION OF BOTH UNITS SHALL BE WITHIN 3 FT OF THE HORIZONTAL PLANE THROUGH THE RUNWAY CENTERLINE.

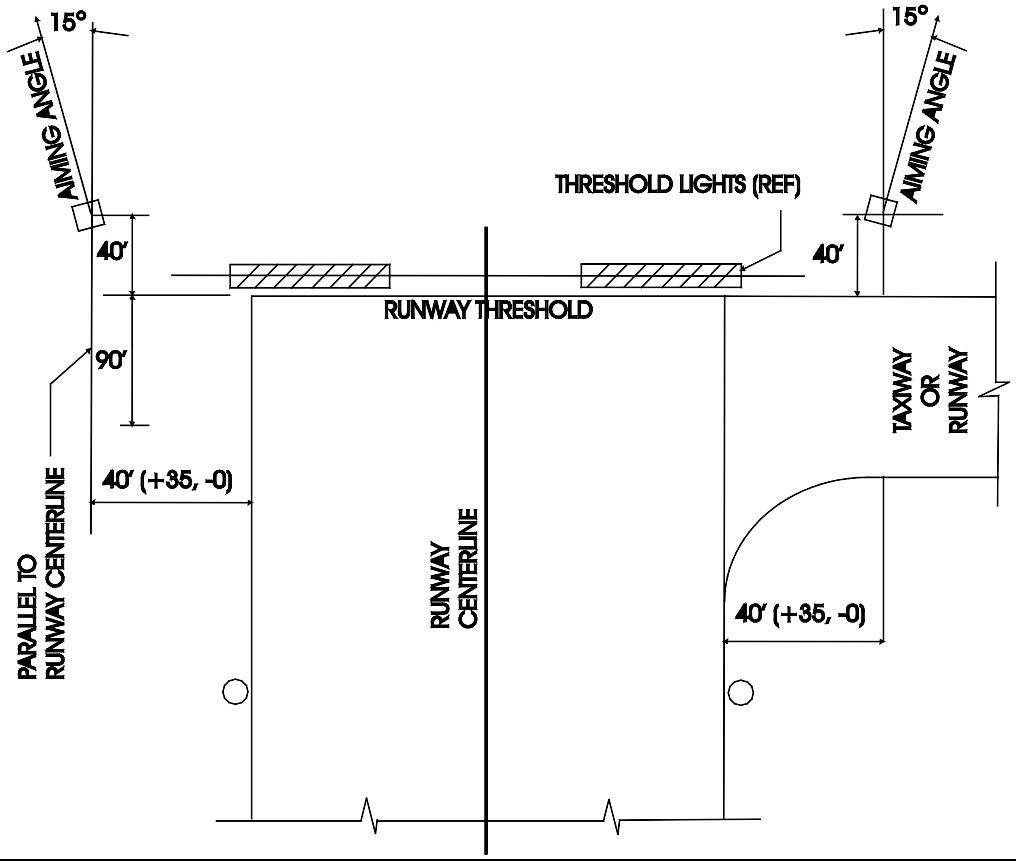

Figure 77. Typical Layout for Runway End Identifier Lights (REILs).

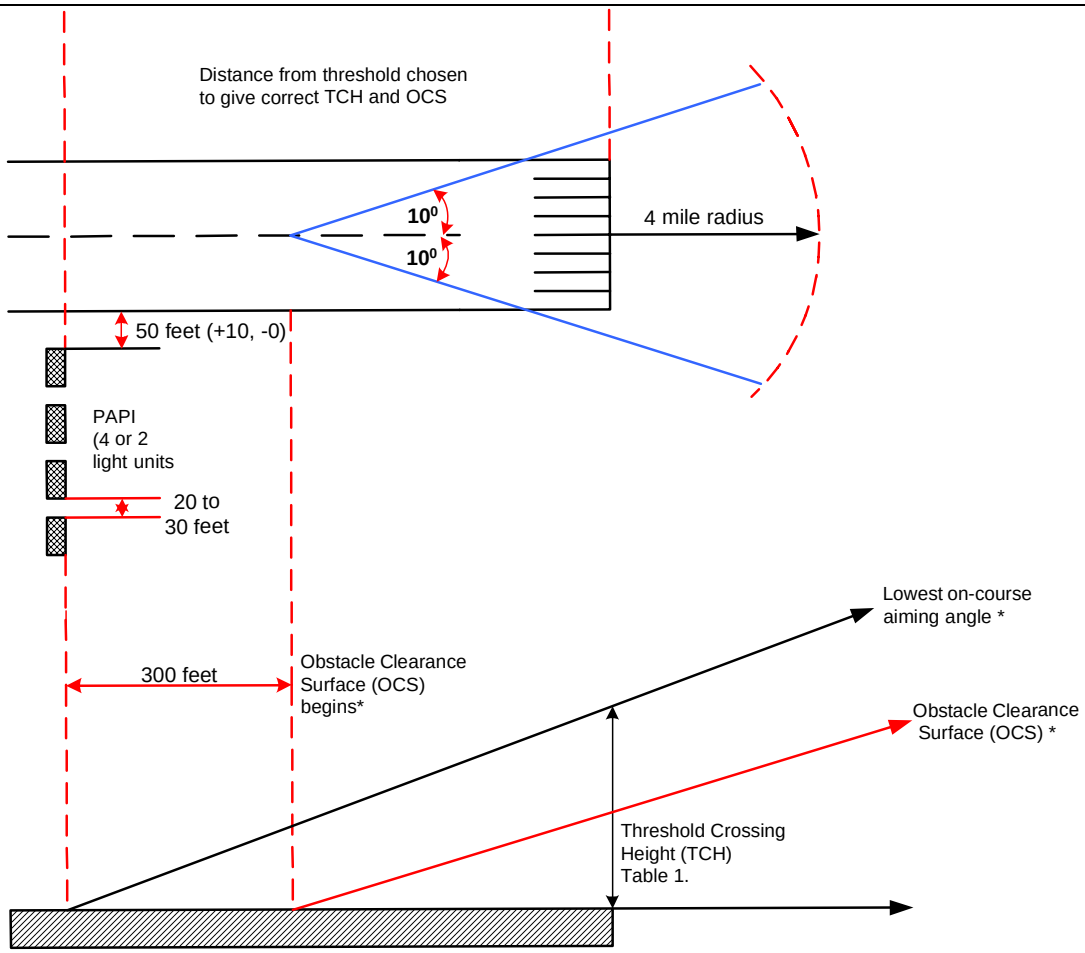

PAPI OCS angle = Lowest on-course aiming angle - 1 degree

NOTES

1. The visual glide path angle is the center of the on-course zone, and is a nominal 3 degrees when measured from the horizontal surface of the runway.
   a. For non-jet runways, the glide path may be raised to 4 degrees maximum to provide obstacle clearance.
   b. If the PAPI glide path is changed to a higher angle from the nominal 3 degrees, it must be communicated in a Notice to Airmen (NOTAM) and published in the Airport Facility Directory.
2. PAPI Obstacle Clearance Surface (OCS).
   a. The PAPI OCS provides the pilot with a minimum approach clearance.
   b. The PAPI must be positioned and aimed so no obstacles penetrate this surface.
      (1) The OCS begins 300 feet (90 m) in front of the PAPI system.
      (2) The OCS is projected into the approach zone 1 degree less than the aiming angle of the third light unit from the runway for an L-880 system, or the outside light unit for an L-881 system.
   c. **Example:** For an L-880 PAPI system with a 3 degree glide path and 20 feet of separation between light units, the third light unit from the runway would be aimed at:
      3 degrees - 10 minutes = 2 degrees, 50 minutes elevation
      (1) The 10 minutes correction was obtained from Table 7.2.
      (2) The OCS angle would be:
         2 degrees 50 minutes - 1 degree = 1 degree 50 minutes.
   d. The OCS is 10 degrees either side of the extended runway centerline and projects 4 statute miles from its point of origin.
   e. If a site survey determines there is an obstacle penetrating the OCS then:
      (1) Remove the obstacle if possible.
      (2) Increase the PAPI approach path angle.
      (3) Move the PAPI toward the threshold to provide an increased TCH equal to the obstacle penetration height.

Figure 78. PAPI Obstacle Clearance Surface.

(1) Glide path correct. 2 white - 2 red lamps. 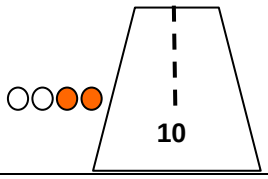	(1) Correct glide path: Leftmost lamp is white; lamp closest to runway is red. 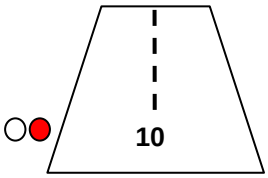
(2) Slightly below glide path. Left white, 3 red. 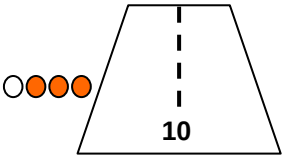	
(3) Below the correct glide path. All red. 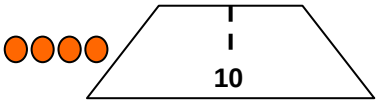	(2) Low glide path: Two red lamps. 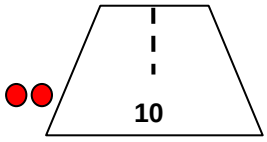
(4) Slightly above the correct glide path. Left red, 3 white. 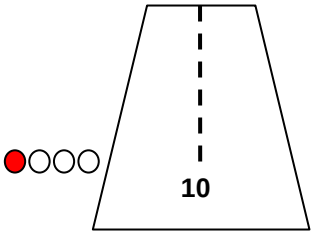	
(5) Above the correct glide path: All white. 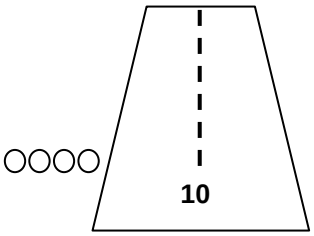	(3) High glide path: Two white lamps. 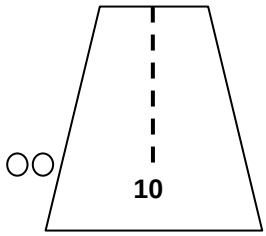
Type L-880	**Type L-881**

NOTE: *The PAPI is a system of either four or two identical light units placed on the left of the runway in a line perpendicular to the centerline. The boxes are positioned and aimed to produce the visual signal shown above.*

Figure 79. PAPI Signal Presentation.

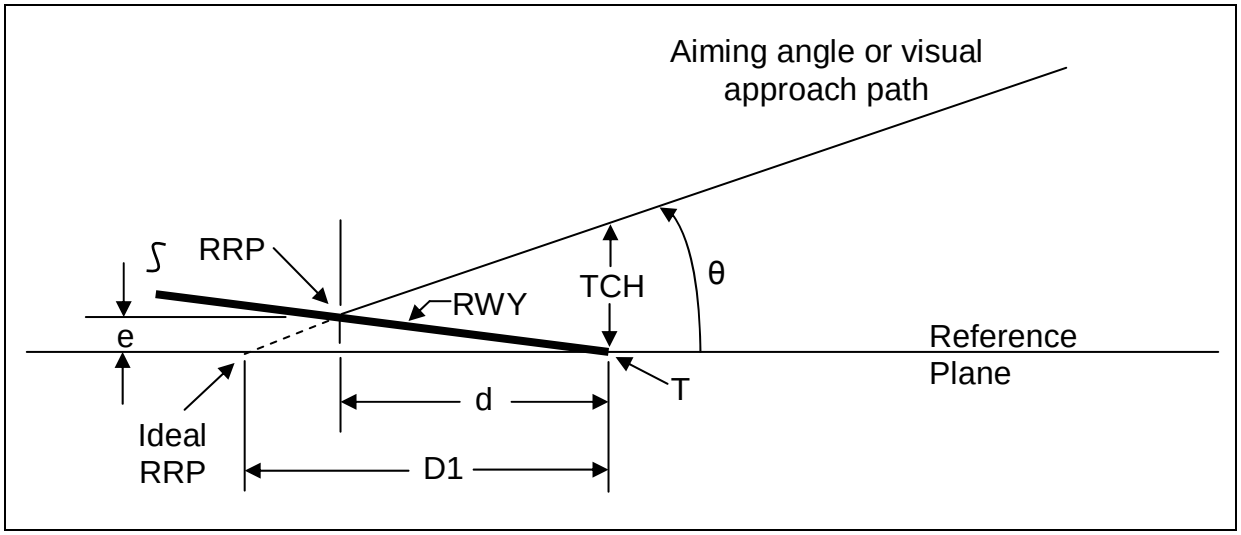

Siting station displaced towards threshold

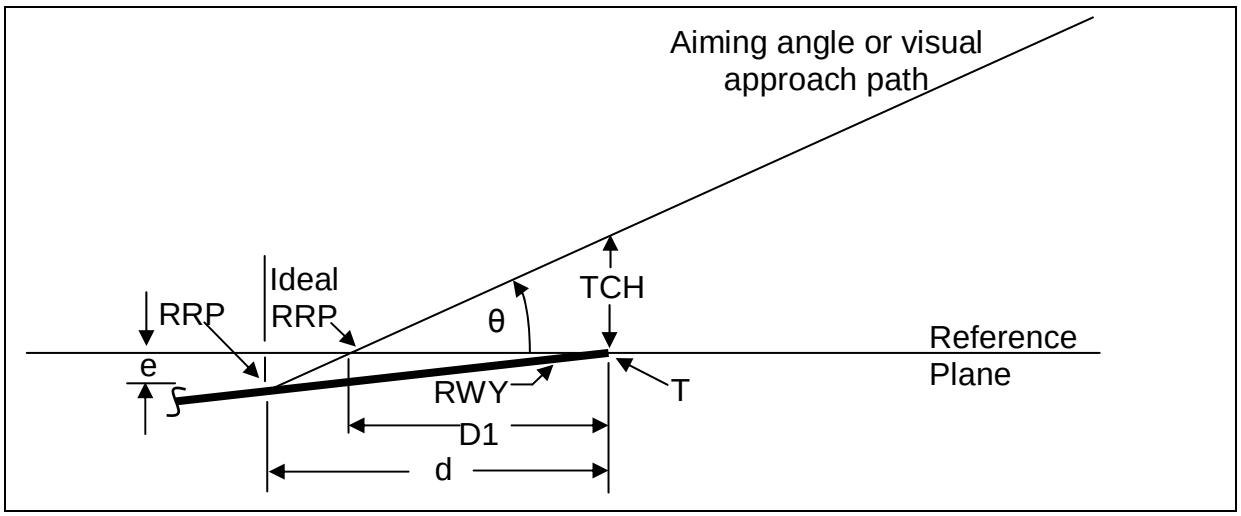

Siting station displaced from threshold

Symbols:

Dl = ideal (zero gradient) distance from threshold
RWY = runway longitudinal gradient
TCH = threshold crossing height
T = threshold
e = elevation difference between threshold and RRP
RRP = runway reference point (where aiming angle or visual approach path intersects runway profile)
d = adjusted distance from threshold
Q = aiming angle

Figure 80. Correction for Runway Longitudinal Gradient.

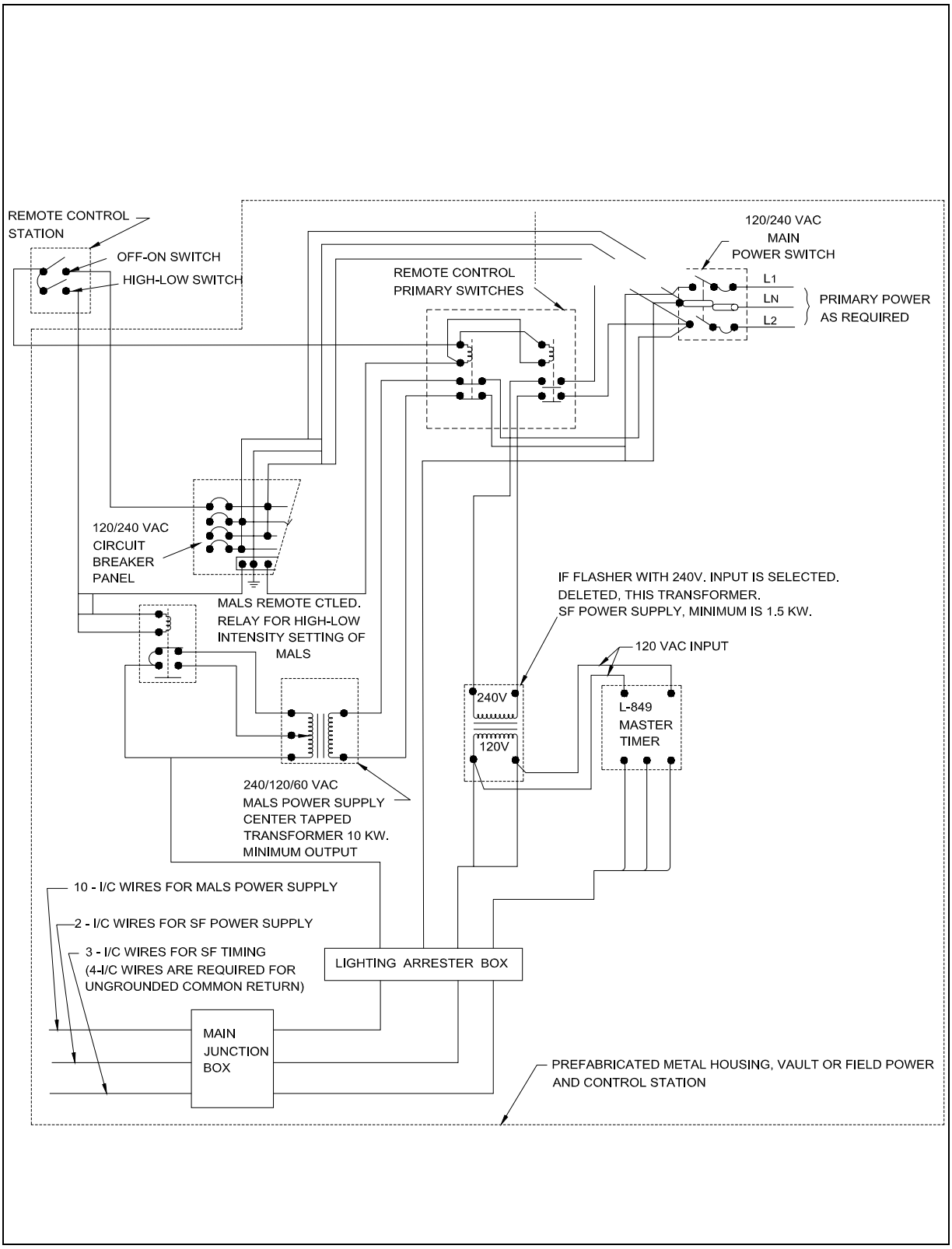

Figure 81. General Wiring Diagram for MALSF with 120-Volt, AC Remote Control.

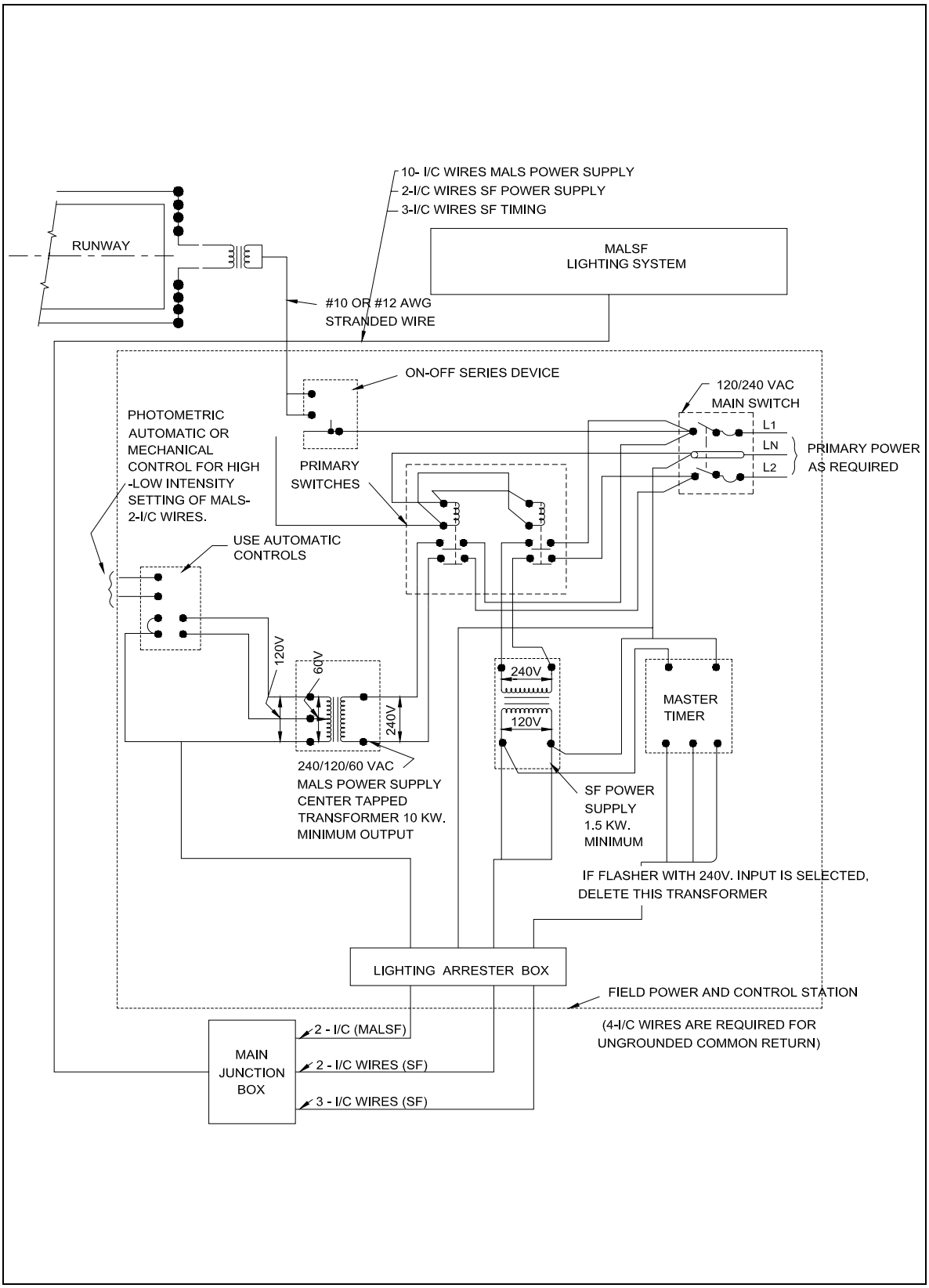

Figure 82. Typical Wiring Diagram for MALSF Controlled from Runway Lighting Circuit.

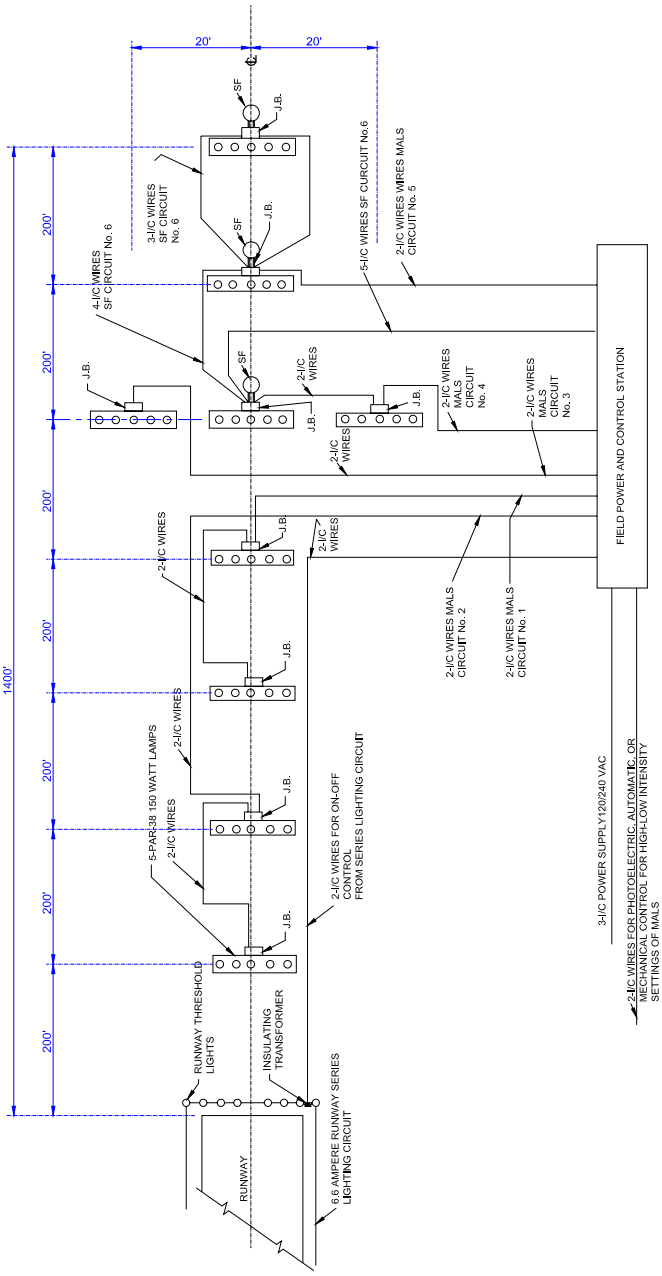

NOTES:

1. THE INSTALLATION CONFORMS TO THE APPLICABLE SECTION OF THE NATIONAL ELECTRICAL CODE AND LOCAL CODES.
2. INSTALL LIGHTING ARRESTERS FOR POWER AND CONTROL LINES AS REQUIRED.
3. WHERE REQUIRED INSTALL A COUNTERPOISE SYSTEM AS SPECIFIED IN THE PLANS.
4. INSTALL FUSES, CIRCUIT BREAKERS AND CUTOUTS IN ACCORDANCE WITH EQUIPMENT RATINGS.
5. CALCULATE THE MINIMUM WIRE SIZE TO BE USED BETWEEN THE POWER SUPPLY, MAIN JUNCTION BOX, AND LIGHT BARS FOR EACH INSTALLATION.
6. INSTALL A MASTER TIMER IN ACCORDANCE WITH SPECIFICATION L-849.
7. CONNECT THE FLASHING LIGHTS AND THE STEADY BURNING LIGHTS INTO THE ELECTRICAL CIRCUITS IN ACCORDANCE WITH THE EQUIPMENT MANUFACTURER'S INSTRUCTIONS.
8. INSTALL THE PREFABRICATED METAL HOUSING AND THE EQUIPMENT IT ENCLOSES IN ACCORDANCE WITH APPLICABLE SECTIONS OF ADVISORY CIRCULAR 150/5370-10 STANDARD SPECIFICATION FOR CONSTRUCTION OF AIRPORTS.
9. INSTALL AND CHECK THE UNDERGROUND CABLES IN ACCORDANCE WITH THE APPLICABLE SECTIONS OF ITEM L-108 OF ADVISORY CIRCULAR 150/5370-10 STANDARD SPECIFICATION FOR CONSTRUCTION OF AIRPORTS.
10. GROUND EACH LIGHT BAR AND FLASHING LIGHT AS SPECIFIED IN THE INSTALLATION PLANS.
11. MAINTAIN NOT LESS THAN 114 VOLTS 60 Hz NOR MORE THAN 126 VOLTS Hz AT LIGHTS.
12. A TYPICAL LOCATION FOR THE FIELD POWER AND CONTROL STATION IS NEAR THE 1000 FOOT CROSS BAR. DO NOT INSTALL THE FIELD POWER AND CONTROL STATION CLOSER THAN 400 FEET TO THE MALS CENTERLINE BETWEEN STATION 0+00 AND 10+00.
13. ALL JUNCTION BOXES (JB) ARE FURNISHED BY THE INSTALLATION CONTRACTOR.
14. POWER CIRCUITS ARE ASSIGNED NUMBERS 1-6 FOR REFERENCE PURPOSES.

Figure 83. Typical Field Wiring Circuits for MALSF.

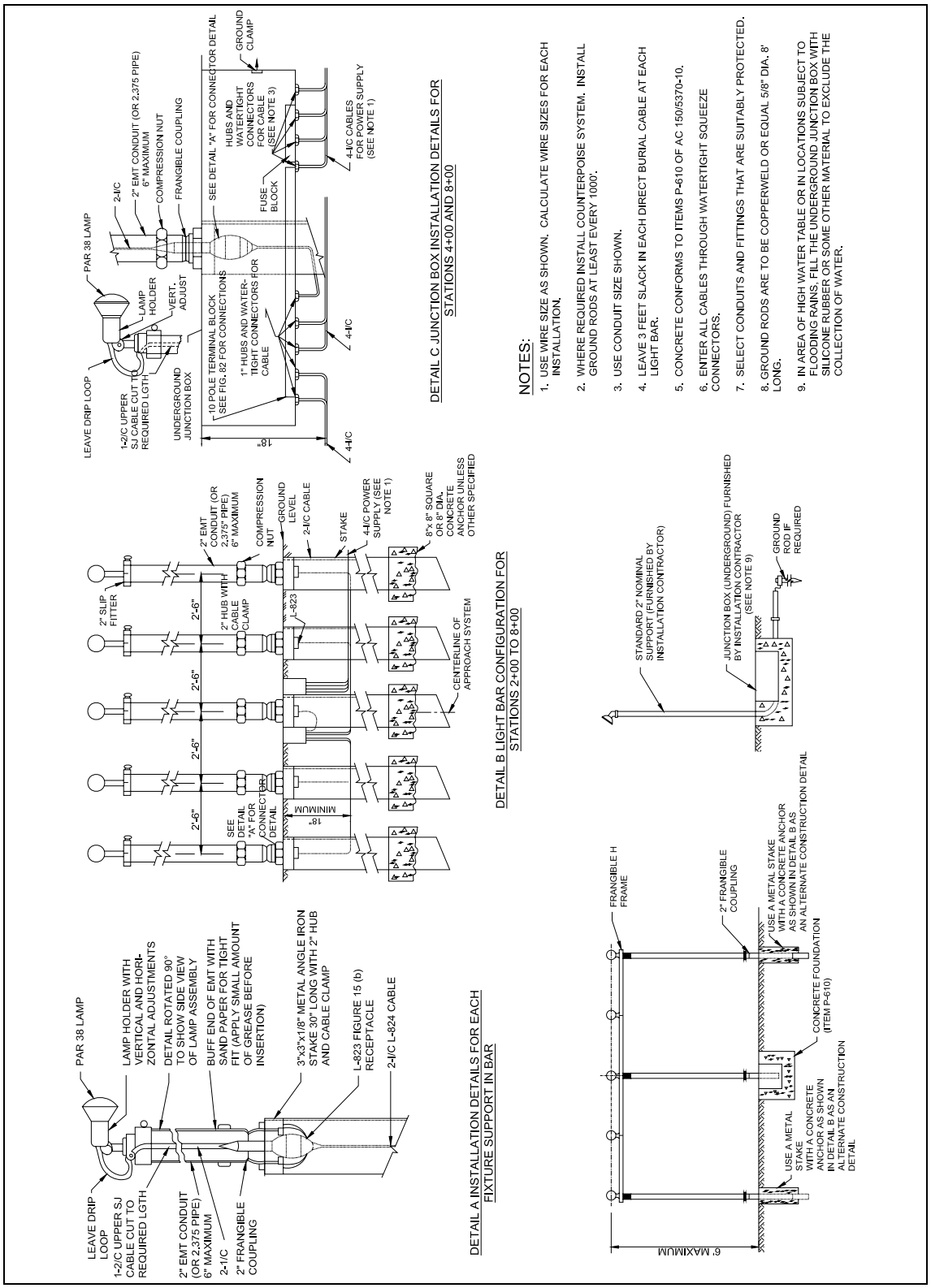

Figure 84. Typical Installation Details for Frangible MALS Structures – 6 foot (1.8 m) Maximum.

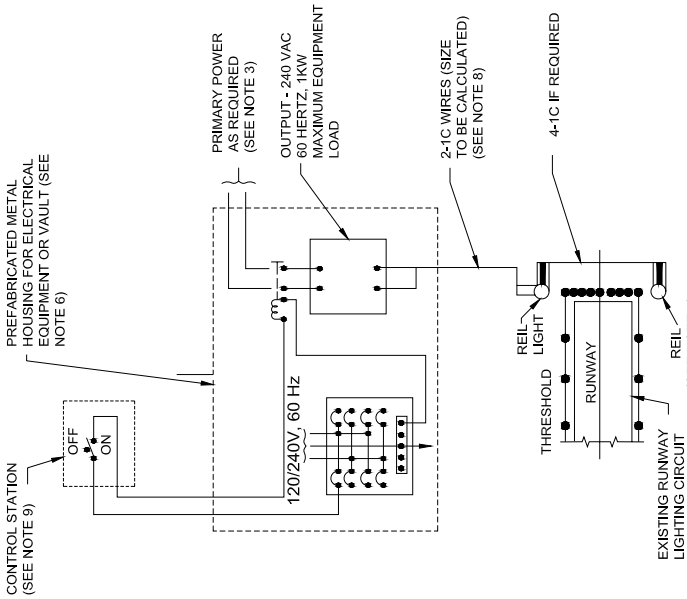

NOTES

1. THE INSTALLATIONS SHOULD CONFORM TO THE APPLICABLE SECTIONS OF THE NATIONAL ELECTRICAL CODE AND LOCAL CODES.

2. LIGHTENING ARRESTERS FOR POWER AND CONTROL LINES SHOULD BE INSTALLED AS REQUIRED.

3. FUSES AND CIRCUIT BREAKERS SHOULD BE IN ACCORDANCE WITH EQUIPMENT RATINGS.

4. THE RUNWAY END IDENTIFER LIGHT SYSTEM IS GROUNDED AS SPECIFIED IN THE PLANS FOR THE INSTALLATION.

5. LOCAL CONTROL CAN BE OBTAINED FOR REILS IF REQUIRED FOR THE INSTALLAION. THE LOCAL SWITCH IS AS STATED IN CHAPTER 7.

6. NO ENCLOSURE IS REQUIRED IF THE EQUIPMENT SHOWN IN THE HOUSING IS DESIGNED FOR OUTDOOR SERVICE.

7. THE LIGHT UNITS AND LOCAL CONTROLS ARE IN ACCORDANCE WITH SPECIFICATION L-849.

8. SAMPLE CALCULATION TO DETERMINE THE MAXIMUM DISTANCE BETWEEN THE DISTRIBUTION TRANSFORMER AND THE FURTHEST REILS LIGHT UNIT USING No. 12 AWG WIRE (RESISTANCE=1.62OHMS/1000').

a. LOCAL CONDITIONS
(1). LOAD OF 2 REILS LIGHT UNITS - 1KW MAXIMUM.
(2). AVAILABLE VOLTAGE FROM DISTRIBUTION TRANSFORMER FOR REILS- 240 VOLTS ± 5%.

b. CALCULATIONS
(1). $\frac{\text{500 WATTS/LIGHT UNIT X 2 LIGHT UNITS}}{\text{240 VOLTS}}$ = 4.16 AMPERES LOAD CURRENT
(2). 240 X 5% = 12 VOLTS PERMISSIBLE LINE LOSS TO HAVE RATED VOLTAGE AT FURTHEST FIXTURE.
(3). 1.62 OHMS/1000' X 4.16 AMPERES LOAD CURRENT = 6.74 VOLTS/1000'.
(4). $\frac{\text{12 VOLTS PERMISSIBLE VD}}{\text{6.74 VD/1000'}}$ = 1780 FEET
(5). SINCE TWO WIRES ARE REQUIRED THE MAXIMUM DISTANCE IS $\frac{1780'}{2}$ = 890 FEET.
(6). TO DETERMINE THE MAXIMUM DISTANCE USING OTHER WIRE SIZES, OBTAIN THE RESISTANCE OF THE WIRE PER 1000' AND FOLLOW THE ABOVE PROCEDURE.

9. THE CONTROL STATION MAY BE A REMOTE CONTROLLED SWITCH, RADIO CONTROL, OR AUTOMATIC CONTROL (PHOTOCELL OR TIMING DEVICES), OR CONTROL FROM RUNWAY EDGE LIGHTING CIRCUIT.

Figure 85. Typical Wiring for REILs Multiple Operation.

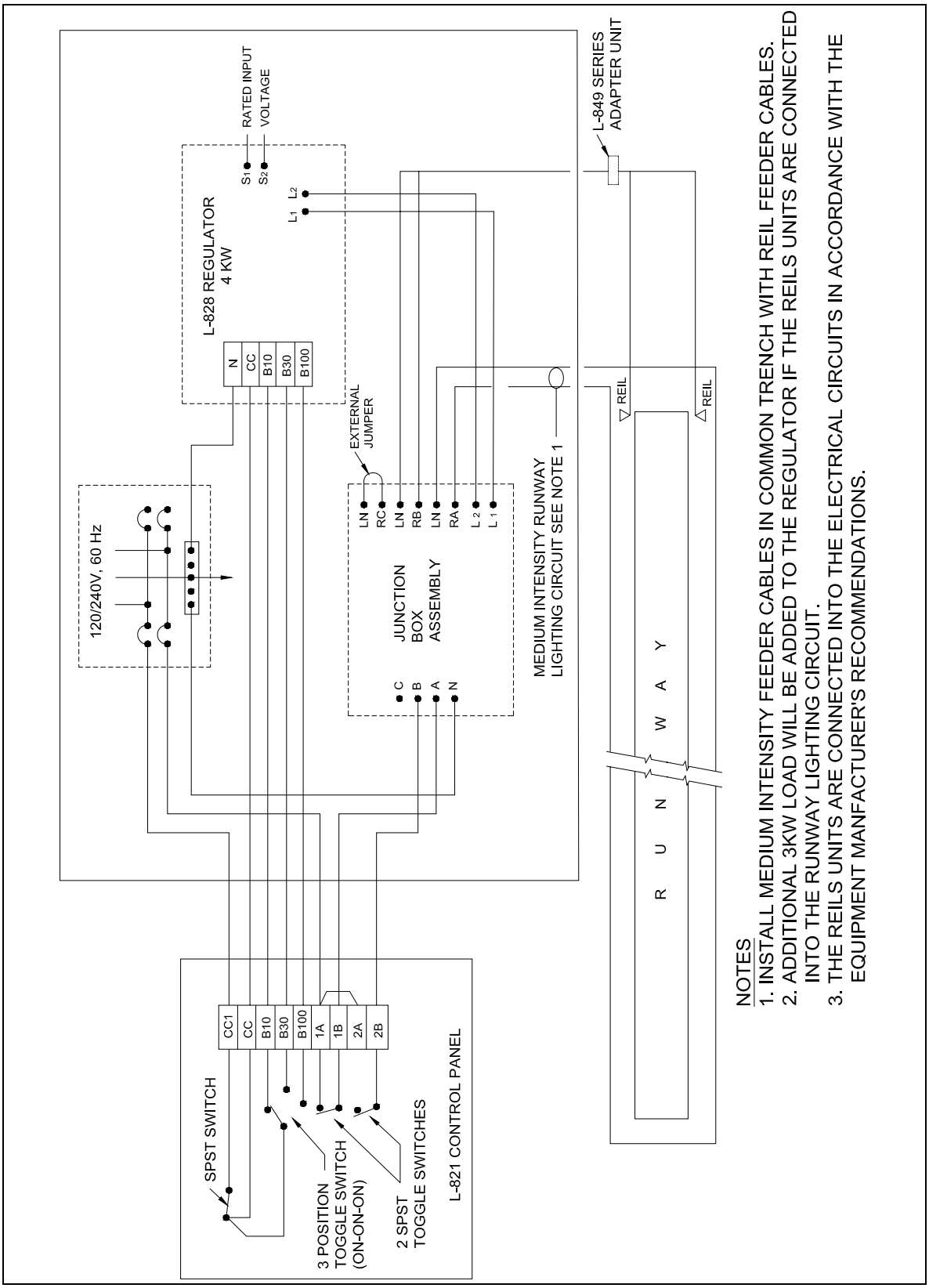

Figure 86. Typical Wiring for REILs Series Operation.

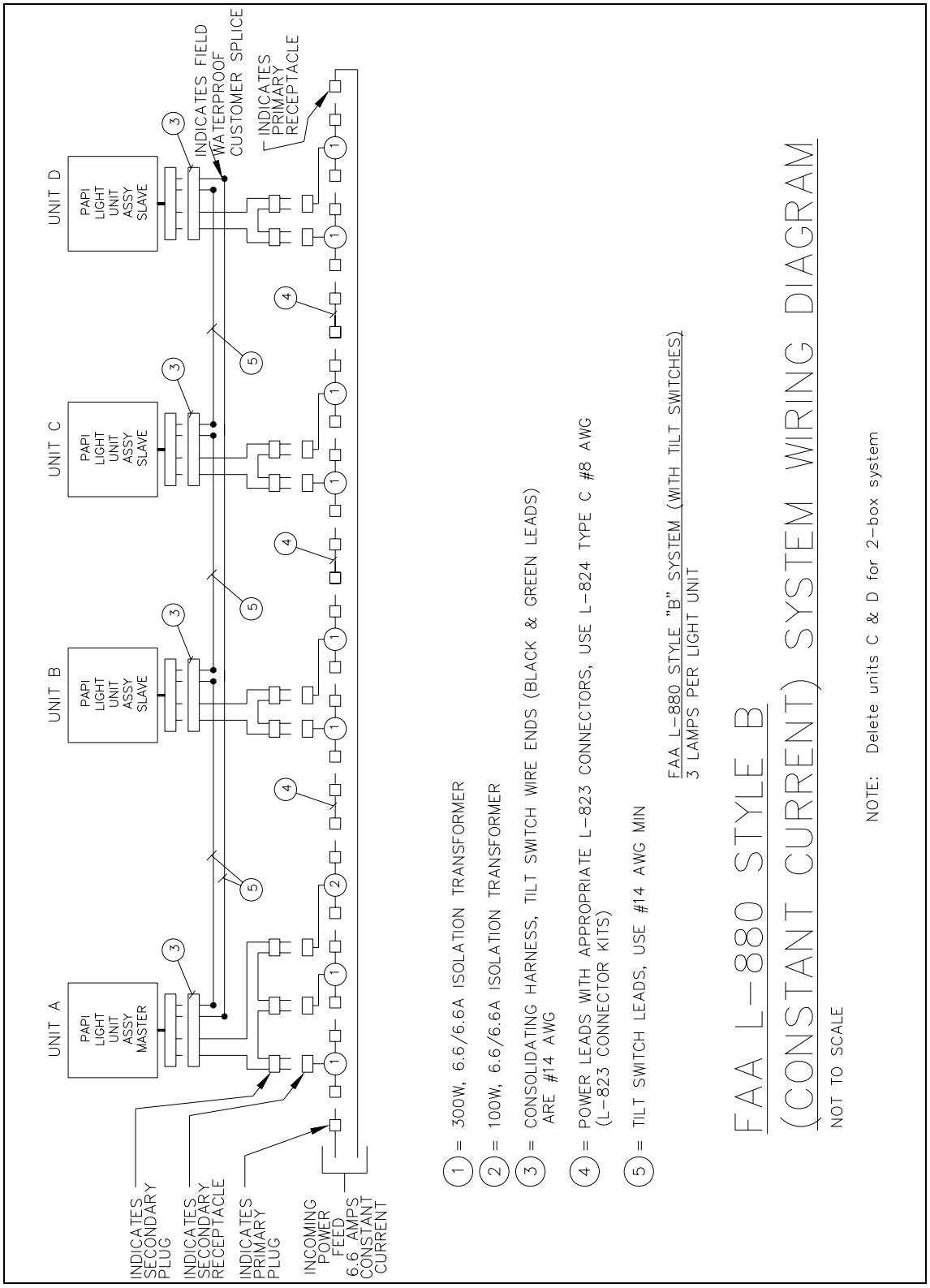

Figure 87. FAA L-880 Style B (Constant Current) System Wiring Diagram.