U.S. Department
of Transportation

Federal Aviation Administration

Advisory Circular

Subject:	CERTIFICATION OF TRANSPORT CATEGORY ROTORCRAFT	**Date:**	9/30/99	**AC No:**	29-2C
		Initiated by:	ASW-110	**Change:**	

1. PURPOSE:

a. This is a total revision of AC 29-2B dated 7/30/97, with Change 1 dated 9/30/98, incorporated. In addition, new material plus changes to existing paragraphs are incorporated. This consolidated version is now renumbered as AC 29-2C and replaces AC 29-2B in its entirety. This revises existing material in 12 paragraphs, adds new material for two paragraphs, and renumbers paragraphs to correspond with Federal Aviation Regulations (FAR) numbering.

b. Requests from the rotorcraft industry to make the document easier to use resulted in renumbering the AC paragraphs to correspond with FAR numbering. The figure numbers are also renumbered accordingly.

c. This AC does not change regulatory requirements and does not authorize changes in, or deviations from, regulatory requirements. This AC establishes an acceptable means, but not the only means, of compliance. Since the guidance material presented in this AC is not regulatory, terms having a mandatory definition, such as “shall” and “must,” etc., as used in this AC, apply either to the reiteration of a regulation itself, or to an applicant who chooses to follow a prescribed method of compliance without deviation.

d. This advisory circular provides information on methods of compliance with 14 CFR Part 29, which contains the Airworthiness Standards for Transport Category Rotorcraft. It includes methods of compliance in the areas of basic design, ground tests, and flight tests.

2. CANCELLATION. AC 29-2B, Certification of Transport Category Rotorcraft, dated 7/30/97, is canceled in its entirety.

3. BACKGROUND. Based largely on precedents set during rotorcraft certification programs spanning over 40 years, this AC consolidates guidance contained in earlier correspondence among FAA headquarters, foreign authorities, the rotorcraft industry, and certificating regions.

4. PRINCIPAL CHANGES:

a. Chapter 3 is now titled "Miscellaneous Guidance (MG), Transport Category Rotorcraft," with the following changes:

- Paragraphs that correspond to a FAR number are merged into existing AC text in Chapter 2.
- Paragraphs that do not correspond with a FAR number either remain in Chapter 3 and are renumbered as MG paragraphs, or are now an appendix.
- In order to stay aligned with FAR numbering, Appendices A, C, and D are reserved for future AC material.

b. Paragraphs revised to incorporate technical guidance are AC 21.35, 29.561, 29.610, 29.863, 29.952, 29.1093, 29.1305, 29.1309, 29.1351, 29.1353, and MG 4 (FADEC). Paragraph AC 29.661, Rotorblade Clearance, contains new material added as a result of National Transportation Safety Board (NTSB) recommendations.

c. New paragraphs added are 29.602, Critical Parts, and MG 12, External Loads. These paragraphs correspond with recent harmonized regulatory changes. Also, figure 29.863-1 is new.

d. The AC is now divided by Subparts and page numbers reflect the relevant FAR Subpart.

e. "FAA/AUTHORITY" as used in this document means FAA or another airworthiness authority that has adopted this AC as a means of compliance with the appropriate regulation referenced.

5. DEVIATIONS. As rotorcraft designs vary from conventional configurations, it may become necessary to deviate from the methods and procedures outlined in this AC. These procedures are only one acceptable means of compliance with Part 29. Any alternate means proposed by an applicant will be given due consideration. Applicants are encouraged to use their technical ingenuity and resourcefulness to develop more efficient and less costly methods of achieving the objectives of Part 29. Regulatory personnel and designees should respond to such efforts by the use of engineering judgment in fostering any such efforts as long as the letter and spirit of Part 29 and the Federal Aviation Act are respected. It is recommended that unusual or unique projects be coordinated a sufficient time in advance with the Rotorcraft Standards Staff, ASW-110, or the appropriate airworthiness authority, to ensure timely and uniform consideration.

6. APPLICABILITY. This material is not to be construed as having any legally binding status and must be treated as advisory only. However, to ensure standardization in the certification process, these procedures should be considered during all rotorcraft type certification and supplemental type certification activities.

7. PARAGRAPHS KEYED TO FAR PART 29. Each paragraph has the applicable amendment to Part 29 shown in the title. All of the original guidance material has been retained as appropriate, even as changes are made to the regulations. This is accomplished through the use of "A," "B," etc., paragraphs, which follow the original numbered paragraphs. These subsequent paragraphs provide updated guidance information or changes to policy that parallel a specific rule change. The guidance material in the original paragraph (for earlier amendments) still applies and is modified as explained in each of the later paragraphs for later amendments. The applicable amendment number will only appear in the title line for the "A," "B," etc., paragraphs. The guidance material in the initial paragraph is intended to apply to all amendments except as modified by the later paragraphs. Each ensuing "A," "B," etc., paragraph will be identified with an amendment level to indicate the rule change that precipitated the policy change.

8. RELATED PUBLICATIONS. FAA Certification personnel and designees should be familiar with Order 8110.4, Type Certification, and Order 8100.5, Aircraft Certification Directorate Procedures.

Eric Bries
Acting Manager, Rotorcraft Directorate

TABLE OF CONTENTS

CHAPTER 1 - FAR 21 CERTIFICATION PROCEDURES FOR PRODUCTS AND PARTS

Page No.

AC 21.16 Special Conditions ..... FAR 21-1
AC 21.31 Type Design ..... FAR 21-2
AC 21.33 Inspection and Tests ..... FAR 21-2
AC 21.35 Flight Tests ..... FAR 21-2
AC 21.39 Flight Test Instrument Calibration and Correction Report ..... FAR 21-6

CHAPTER 2 - FAR 29 AIRWORTHINESS STANDARDS: NORMAL CATEGORY ROTORCRAFT

SUBPART A - GENERAL

GENERAL

AC 29.1 Applicability A-1
AC 29.1A Applicability A-2
AC 29.2 Special Retroactive Requirements A-3

SUBPART B - FLIGHT

GENERAL

AC 29.21 Proof of Compliance B-1
AC 29.21A Proof of Compliance B-3
AC 29.25 Weight Limits B-3
AC 29.27 Center of Gravity Limits B-4
AC 29.29 Empty Weight and Corresponding Center of Gravity B-6
AC 29.31 Removable Ballast B-7
AC 29.33 Main Rotor Speed and Pitch Limits B-7

PERFORMANCE

AC 29.45 Performance - General B-10
AC 29.45A Performance - General B-20
AC 29.45B Performance - General B-20
AC 29.49 Performance at Minimum Operating Speed. Hover Performance for Rotorcraft B-27
AC 29.51 Takeoff Data - General B-29
AC 29.51A Takeoff Data - General B-30
AC 29.53 Takeoff: Category A B-31
AC 29.53A Takeoff: Category A B-34

SUBPART B - FLIGHT (continued)

PERFORMANCE (continued)

Page No.

AC 29.55 Takeoff Decision Point: Category A B-36
AC 29.59 Takeoff Path: Category A B-36
AC 29.59A Takeoff Path, Distance and Rejected Takeoff; Ground Level and Elevated Heliport: Category A B-46
AC 29.63 Takeoff: Category B B-56
AC 29.65 Climb: (All Engines Operating) B-59
AC 29.65A Climb: (General and All Engines Operating) B-60
AC 29.67 Climb: One Engine Inoperative B-62
AC 29.67A Climb: One Engine Inoperative B-64
AC 29.71 Rotorcraft Angle of Glide: Category B B-65
AC 29.73 Performance at Minimum Operating Speed B-68
AC 29.75 Landing B-70
AC 29.75A Landing B-79
AC 29.77 Balked Landing: Category A B-89
AC 29.79 Limiting Height - Speed Envelope B-90
AC 29.85 Balked Landing: Category A B-98
AC 29.87 Limiting Height - Speed Envelope B-99

FLIGHT CHARACTERISTICS

AC 29.141 Flight Characteristics - General B-100
AC 29.143 Controllability and Maneuverability B-101
AC 29.151 Flight Controls B-106
AC 29.161 Trim Control B-107
AC 29.161A Trim Control B-108
AC 29.171 Stability: General B-108
AC 29.173 Static Longitudinal Stability B-109
AC 29.175 Demonstration of Static Longitudinal Stability B-110
AC 29.177 Static Directional Stability B-114
AC 29.181 Dynamic Stability: Category A Rotorcraft B-115

GROUND AND WATER HANDLING CHARACTERISTICS

AC 29.231 General (Ground and Water Handling Characteristics) B-116
AC 29.235 Taxiing Condition B-116
AC 29.239 Spray Characteristics B-117
AC 29.241 Ground Resonance B-118

MISCELLANEOUS FLIGHT REQUIREMENTS

AC 29.251 Vibration B-123

SUBPART C - STRENGTH REQUIREMENTS

Page No.

GENERAL

AC 29.301 Loads....C-1
AC 29.303 Factor of Safety....C-1
AC 29.305 Strength and Deformation....C-2
AC 29.307 Proof of Structure....C-2
AC 29.307A Proof of Structure....C-3
AC 29.309 Design Limitations....C-4

FLIGHT LOADS

AC 29.321 General - Flight Loads....C-5
AC 29.337 Limit Maneuvering Load Factor....C-5
AC 29.339 Resultant Limit Maneuvering Loads....C-8
AC 29.341 Gust Loads....C-8
AC 29.351 Yawing Conditions....C-10
AC 29.351A Yawing Conditions....C-13
AC 29.351B Yawing Conditions....C-15
AC 29.361 Engine Torque....C-15

CONTROL SURFACE AND SYSTEM LOADS

AC 29.391 Control Surface and System Loads - General....C-17
AC 29.391A Control Surface and System Loads - General....C-17
AC 29.395 Control System....C-17
AC 29.395A Control System....C-19
AC 29.397 Limit Pilot Forces and Torques....C-19
AC 29.399 Dual Control System....C-20
AC 29.401 Auxiliary Rotor Assemblies....C-20
AC 29.401A Auxiliary Rotor Assemblies....C-21
AC 29.403 Auxiliary Rotor Attachment Structure....C-22
AC 29.403A Auxiliary Rotor Attachment Structure....C-22
AC 29.411 Ground Clearance: Tail Rotor Guard....C-23
AC 29.413 Stabilizing and Control Surfaces....C-24
AC 29.413A Stabilizing and Control Surfaces....C-26
AC 29.427 Unsymmetrical Loads....C-26

GROUND LOADS

AC 29.471 Ground Loads - General....C-30
AC 29.473 Ground Loading Conditions and Assumptions....C-30
AC 29.475 Tires and Shock Absorbers....C-31
AC 29.477 Landing Gear Arrangement....C-31
AC 29.479 Level Landing Conditions....C-31

SUBPART C - STRENGTH REQUIREMENTS(continued)

GROUND LOADS (continued)

Page No.

AC 29.481 Tail-Down Landing Conditions C-33
AC 29.483 One-Wheel Landing Conditions C-33
AC 29.485 Lateral Drift Landing Conditions C-33
AC 29.493 Braked Roll Conditions C-34
AC 29.497 Ground Loading Conditions: Landing Gear With Tail Wheels C-34
AC 29.501 Ground Loading Conditions: Landing Gear With Skids C-36
AC 29.501A Ground Loading Conditions: Landing Gear With Skids C-37
AC 29.505 Ski Landing Conditions C-38
AC 29.511 Ground Load: Unsymmetrical Loads on Multiple-Wheel Units C-38

WATER LOADS

AC 29.519 Hull Type Rotorcraft: Water-Based, Amphibian C-40
AC 29.521 Float Landing Conditions C-42

MAIN COMPONENT REQUIREMENTS

AC 29.547 Main Rotor Structure C-43
AC 29.547A Main Rotor and Tail Rotor Structure C-43
AC 29.549 Fuselage and Rotor Pylon C-46
AC 29.551 Auxiliary Lifting Surfaces C-47

EMERGENCY LANDING CONDITIONS

AC 29.561 Emergency Landing Conditions - General C-48
AC 29.561A Emergency Landing Conditions - General C-50
AC 29.561B Emergency Landing Conditions - General C-51
AC 29.562 Emergency Landing Dynamic Conditions C-52
AC 29.563 Structural Ditching Provisions C-52
AC 29.563A Structural Ditching Provisions C-52

FATIGUE EVALUATION

AC 29.571 Fatigue Evaluation of Flight Structure C-55
AC 29.571A Fatigue Evaluation of Flight Structure C-57

SUBPART D - DESIGN AND CONSTRUCTION

GENERAL

Page No.

AC 29.601 Design D-1
AC 29.602 Critical Parts D-2
AC 29.603 Materials D-3
AC 29.605 Fabrication Methods D-4
AC 29.607 Fasteners D-5
AC 29.609 Protection of Structure D-5
AC 29.610 Lightning and Static Electricity Protection D-6
AC 29.611 Inspection Provisions D-12
AC 29.613 Material Strength Properties and Design Values D-13
AC 29.613A Material Strength Properties and Design Values D-15
AC 29.619 Special Factors D-16
AC 29.621 Casting Factors D-16
AC 29.623 Bearing Factors D-26
AC 29.625 Fitting Factors D-27
AC 29.629 Flutter D-28
AC 29.629A Flutter and Divergence D-28
AC 29.631 Bird Strike D-29

ROTORS

AC 29.653 Pressure Venting and Drainage of Rotor Blades D-31
AC 29.659 Mass Balance D-31
AC 29.661 Rotor Blade Clearance D-31
AC 29.663 Ground Resonance Prevention Means D-33
AC 29.663A Ground Resonance Prevention Means D-35

CONTROL SYSTEMS

AC 29.671 Control Systems - General D-36
AC 29.672 Stability Augmentation, Automatic, and Power-Operated Systems D-36
AC 29.673 Primary Flight Controls D-37
AC 29.674 Interconnected Controls D-38
AC 29.675 Stops D-38
AC 29.679 Control System Locks D-39
AC 29.681 Limit Load Static Tests D-40
AC 29.683 Operation Tests D-41
AC 29.685 Control System Details D-42
AC 29.687 Spring Devices D-43
AC 29.691 Autorotation Control Mechanism D-44
AC 29.695 Power Boost and Power-Operated Control System D-45

SUBPART D - DESIGN AND CONSTRUCTION (continued)

Page No.

LANDING GEAR

AC 29.723 Shock Absorption Tests D-48
AC 29.725 Limit Drop Test D-51
AC 29.727 Reserve Energy Absorption Drop Test D-51
AC 29.727A Reserve Energy Absorption Drop Test D-52
AC 29.729 Retracting Mechanism, Landing Gear D-52
AC 29.731 Wheels D-54
AC 29.733 Tires D-55
AC 29.735 Brakes D-57
AC 29.737 Skis D-58

FLOATS AND HULLS

AC 29.751 Main Float Buoyancy D-60
AC 29.753 Main Float Design D-60
AC 29.755 Hull Buoyancy D-63
AC 29.757 Hull and Auxiliary Float Strength D-64

PERSONNEL AND CARGO ACCOMMODATIONS

AC 29.771 Pilot Compartment D-66
AC 29.773 Pilot Compartment View D-67
AC 29.775 Windshields and Windows D-73
AC 29.775A Windshields and Windows D-73
AC 29.775B Windshields and Windows D-73
AC 29.777 Cockpit Controls D-74
AC 29.779 Motion and Effect of Cockpit Controls D-75
AC 29.783 Doors D-77
AC 29.783A Doors D-81
AC 29.785 Seats, Safety Belts, and Harnesses D-82
AC 29.785A Seats, Berths, Belts, Safety Belts, and Harnesses D-84
AC 29.787 Cargo and Baggage Compartments D-86
AC 29.787A Cargo and Baggage Compartments D-86
AC 29.801 Ditching D-87
AC 29.803 Emergency Evacuation D-95
AC 29.803A Emergency Evacuation D-95
AC 29.805 Flightcrew Emergency Exits D-96
AC 29.805A Flightcrew Emergency Exits D-96
AC 29.807 Passenger Emergency Exits D-97
AC 29.807A Emergency Exits D-98
AC 29.809 Emergency Exit Arrangement D-99
AC 29.809A Emergency Exit Arrangement D-100
AC 29.811 Emergency Exit Marking D-101
AC 29.811A Emergency Exit Marking D-103

SUBPART D - DESIGN AND CONSTRUCTION (continued)

Page No.

PERSONNEL AND CARGO ACCOMMODATIONS(continued)

AC 29.812 Emergency Lighting D-104
AC 29.813 Emergency Exit Access D-104
AC 29.815 Main Aisle Width D-106
AC 29.831 Ventilation D-107
AC 29.833 Heaters D-108

FIRE PROTECTION

AC 29.851 Fire Extinguishers D-110
AC 29.853 Compartment Interiors D-111
AC 29.855 Cargo and Baggage Compartments D-113
AC 29.855A Cargo and Baggage Compartments D-115
AC 29.859 Combustion Heater Fire Protection D-115
AC 29.861 Fire Protection of Structure, Controls, and Other Parts D-119
AC 29.861A Fire Protection of Structure, Controls, and Other Parts D-122
AC 29.863 Flammable Fluid Fire Protection D-122

EXTERNAL LOAD ATTACHING MEANS

AC 29.865 External Load Attaching Means D-127
AC 29.865A External Load Attaching Means D-132
AC 29.865B External Load Attaching Means (SEE MG 12) D-138

MISCELLANEOUS (DESIGN AND CONSTRUCTION)

AC 29.871 Leveling Marks D-139
AC 29.873 Ballast Provisions D-139
AC 29.877 Ice Protection D-140

SUBPART E - POWERPLANT

GENERAL

AC 29.901 Installation E-1
AC 29.901A Installation E-8
AC 29.901B Installation E-8
AC 29.903 Engines E-9
AC 29.903A Engines E-11
AC 29.903B Engines E-13
AC 29.903C Turbine Engine Installation E-13
AC 29.907 Engine Vibration E-29

SUBPART E - POWERPLANT (continued)

Page No.

GENERAL (continued)

AC 29.908 Cooling Fans E-29
AC 29.908A Cooling Fans E-30

ROTOR DRIVE SYSTEM

AC 29.917 Design E-33
AC 29.917A Design E-34
AC 29.921 Rotor Brake E-37
AC 29.923 Rotor Drive System and Control Mechanism Tests E-39
AC 29.923A Rotor Drive System and Control Mechanism Tests E-45
AC 29.923B Rotor Drive System and Control Mechanism Tests E-52
AC 29.923C Rotor Drive System and Control Mechanism Tests E-53
AC 29.927 Additional Tests E-54
AC 29.927A Additional Tests E-56
AC 29.931 Shafting Critical Speeds E-58
AC 29.935 Shafting Joints E-63
AC 29.939 Turbine Engine Operating Characteristics E-63

FUEL SYSTEM

AC 29.951 Fuel System - General E-66
AC 29.952 Fuel System Crash Resistance E-68
AC 29.953 Fuel System Independence E-93
AC 29.954 Fuel System Lightning Protection E-94
AC 29.955 Fuel Flow E-95
AC 29.955A Fuel Flow E-99
AC 29.957 Flow Between Interconnected Tanks E-103
AC 29.959 Unusable Fuel Supply E-103
AC 29.961 Fuel System Hot Weather Operation E-104
AC 29.961A Fuel System Hot Weather Operation E-106
AC 29.963 Fuel Tanks: General E-107
AC 29.963A Fuel Tanks: General E-107
AC 29.963B Fuel Tanks: General E-108
AC 29.965 Fuel Tank Tests E-109
AC 29.967 Fuel Tank Installation E-111
AC 29.967A Fuel Tank Installation E-113
AC 29.969 Fuel Tank Expansion Space E-113
AC 29.969A Fuel Tank Expansion Space E-114
AC 29.971 Fuel Tank Sump E-114
AC 29.971A Fuel Tank Sump E-116
AC 29.973 Fuel Tank Filler Connection E-116
AC 29.973A Fuel Tank Filler Connection E-117

SUBPART E - POWERPLANT (continued)

Page No.

FUEL SYSTEM (continued)

AC 29.975 Fuel Tank Vents and Carburetor Vapor Vents E-118
AC 29.975A Fuel Tank Vents and Carburetor Vapor Vents E-119
AC 29.975B Fuel Tank Vents and Carburetor Vapor Vents E-119
AC 29.977 Fuel Tank Outlet E-120
AC 29.979 Pressure Refueling and Fueling Provisions Below Fuel Level E-121

FUEL SYSTEM COMPONENTS

AC 29.991 Fuel Pumps E-123
AC 29.991A Fuel Pumps E-124
AC 29.993 Fuel System Lines and Fittings E-124
AC 29.995 Fuel Valves E-125
AC 29.997 Fuel Strainer or Filter E-125
AC 29.997A Fuel Strainer or Filter E-126
AC 29.999 Fuel System Drains E-127
AC 29.999A Fuel System Drains E-127
AC 29.1001 Fuel Jettisoning E-128

OIL SYSTEM

AC 29.1011 Oil System - General E-130
AC 29.1013 Oil Tanks E-131
AC 29.1015 Oil Tank Tests E-131
AC 29.1017 Oil Lines and Fittings E-132
AC 29.1019 Oil Strainer or Filter E-132
AC 29.1019A Oil Strainer or Filter E-133
AC 29.1021 Oil System Drains E-134
AC 29.1023 Oil Radiators E-134
AC 29.1025 Oil Valves E-134
AC 29.1027 Transmission and Gearboxes: General E-135

COOLING

AC 29.1041 Cooling - General E-137
AC 29.1043 Cooling Tests E-140
AC 29.1043A Cooling Tests E-142
AC 29.1045 Cooling Test Procedures E-143
AC 29.1047 Takeoff Cooling Test Procedures E-147
AC 29.1049 Hovering Cooling Test Procedures E-149

SUBPART E - POWERPLANT (continued)

Page No.

INDUCTION SYSTEM

AC 29.1091 Air Induction E-151
AC 29.1093 Induction System Icing Protection E-152
AC 29.1093A Induction System Icing Protection E-161
AC 29.1101 Carburetor Air Preheater Design E-162
AC 29.1103 Induction System Ducts and Air Duct Systems E-162
AC 29.1105 Induction System Screens E-164
AC 29.1107 Intercoolers and After-Coolers E-165
AC 29.1109 Carburetor Air Cooling E-165

EXHAUST SYSTEM

AC 29.1121 General E-166
AC 29.1123 Exhaust Piping E-167
AC 29.1125 Exhaust Heat Exchangers E-169

POWERPLANT CONTROLS AND ACCESSORIES

AC 29.1141 Powerplant Controls: General E-173
AC 29.1142 Auxiliary Power Unit Controls E-174
AC 29.1143 Engine Controls E-175
AC 29.1143A Engine Controls E-176
AC 29.1143B Engine Controls E-176
AC 29.1145 Ignition Switches E-176
AC 29.1147 Mixture Controls E-177
AC 29.1151 Rotor Brake Controls E-178
AC 29.1157 Carburetor Air Temperature Controls E-179
AC 29.1159 Supercharger Controls E-179
AC 29.1163 Powerplant Accessories E-180
AC 29.1165 Engine Ignition Systems E-181

POWERPLANT FIRE PROTECTION

AC 29.1181 Designated Fire Zones: Regions Included E-182
AC 29.1183 Lines, Fittings, and Components E-183
AC 29.1185 Flammable Fluids E-184
AC 29.1187 Drainage and Ventilation of Fire Zones E-186
AC 29.1189 Shutoff Means E-186
AC 29.1191 Firewalls E-187
AC 29.1193 Cowling and Engine Compartment Covering E-191
AC 29.1193A Cowling and Engine Compartment Covering E-192
AC 29.1194 Other Surfaces E-193
AC 29.1195 Fire Extinguishing Systems E-194
AC 29.1197 Fire Extinguishing Agents E-197

SUBPART E - POWERPLANT (continued)

Page No.

POWERPLANT FIRE PROTECTION (continued)

AC 29.1199 Extinguishing Agent Containers E-200
AC 29.1201 Fire Extinguishing System Materials E-201
AC 29.1203 Fire Detector Systems E-201

SUBPART F - EQUIPMENT

GENERAL

AC 29.1301 Function and Installation F-1
AC 29.1303 Flight and Navigation Instruments F-1
AC 29.1305 Powerplant Instruments F-5
AC 29.1305A Powerplant Instruments F-6
AC 29.1305B Powerplant Instruments F-7
AC 29.1305C Powerplant Instruments F-10
AC 29.1307 Miscellaneous Equipment F-10
AC 29.1309 Equipment, Systems, and Installations F-11

INSTRUMENTS - INSTALLATION

AC 29.1321 Arrangement and Visibility F-32
AC 29.1322 Warning, Caution, and Advisory Lights F-33
AC 29.1323 Airspeed Indicating System F-37
AC 29.1323A Airspeed Indicating System F-38
AC 29.1325 Static Pressure Systems F-39
AC 29.1327 Magnetic Direction Indicator F-40
AC 29.1329 Automatic Pilot Systems F-40
AC 29.1331 Instruments Using a Power Supply F-49
AC 29.1333 Instrument Systems F-50
AC 29.1335 Flight Director Systems F-50
AC 29.1337 Powerplant Instruments - Fuel Gauge Calibration F-51
AC 29.1337A Powerplant Instruments F-53

ELECTRICAL SYSTEMS AND EQUIPMENT

AC 29.1351 Electrical Systems and Equipment - General F-54
AC 29.1353 Electrical Equipment and Installations F-62
AC 29.1355 Distribution System F-63
AC 29.1355A Distribution System F-64
AC 29.1357 Circuit Protective Devices F-64
AC 29.1357A Circuit Protective Devices F-66
AC 29.1359 Electrical System Fire and Smoke Protection F-66
AC 29.1363 Electrical Systems Tests F-68

SUBPART F - EQUIPMENT (continued)

Page No.

LIGHTS

AC 29.1381 Instrument Lights F-69
AC 29.1383 Landing Lights F-70
AC 29.1385 Position Light System Installation F-70
AC 29.1387 Position Light System Dihedral Angles F-70
AC 29.1389 Position Light Distribution and Intensities F-70
AC 29.1391 Minimum Intensities in the Horizontal Plane of Forward and Rear Position Light F-70
AC 29.1393 Minimum Intensities in Any Vertical Plane of Forward and Rear Position Lights F-70
AC 29.1395 Maximum Intensities In Overlapping Beams of Forward and Rear Position Lights F-70
AC 29.1397 Color Specifications F-70
AC 29.1399 Riding Light F-71
AC 29.1401 Anticollision Light System F-72

SAFETY EQUIPMENT

AC 29.1411 Safety Equipment - General F-73
AC 29.1413 Safety Belts: Passenger Warning Device F-75
AC 29.1415 Ditching Equipment F-76
AC 29.1419 Ice Protection F-77

MISCELLANEOUS EQUIPMENT

AC 29.1431 Electronic Equipment F-96
AC 29.1433 Vacuum Systems F-96
AC 29.1435 Hydraulic Systems F-97
AC 29.1439 Protective Breathing Equipment F-100
AC 29.1457 Cockpit Voice Recorder F-101
AC 29.1459 Flight Recorders F-102
AC 29.1461 Equipment Containing High Energy Rotors F-105

SUBPART G - OPERATING LIMITATIONS AND INFORMATION

OPERATING LIMITATIONS

AC 29.1501 Operating Limitations - General G-1
AC 29.1503 Airspeed Limitations: General G-1
AC 29.1505 Never-Exceed Speed G-3
AC 29.1509 Rotor Speed G-6
AC 29.1517 Limiting Height-Speed Envelope G-8
AC 29.1519 Weight and Center of Gravity G-9

SUBPART G - OPERATING LIMITATIONS AND INFORMATION (continued)

Page No.

OPERATING LIMITATIONS (continued)

AC 29.1521 Powerplant Limitations G-9
AC 29.1521A Powerplant Limitations G-10
AC 29.1521B Powerplant Limitations G-11
AC 29.1522 Auxiliary Power Unit Limitations G-11
AC 29.1523 Minimum Flightcrew G-12
AC 29.1525 Kinds of Operations G-16
AC 29.1527 Maximum Operating Altitude G-16
AC 29.1529 Instructions for Continued Airworthiness (Maintenance Manual) G-17
AC 29.1529A Instructions for Continued Airworthiness (Maintenance Manual) G-20

MARKINGS AND PLACARDS

AC 29.1541 Marking and Placards - General G-21
AC 29.1543 Instrument Markings: General G-21
AC 29.1545 Airspeed Indicator G-25
AC 29.1547 Magnetic Direction Indicator G-25
AC 29.1549 Powerplant Instruments G-25
AC 29.1551 Oil Quantity Indicators G-26
AC 29.1553 Fuel Quantity Indicator G-26
AC 29.1555 Control Markings G-27
AC 29.1557 Miscellaneous Markings and Placards G-28
AC 29.1559 Limitations Placard G-29
AC 29.1561 Safety Equipment G-30
AC 29.1565 Tail Rotor G-31

ROTORCRAFT FLIGHT MANUAL

AC 29.1581 Rotorcraft Flight Manual - General G-32
AC 29.1583 Operating Limitations G-40
AC 29.1583A Operating Limitations G-43
AC 29.1585 Operating Procedures G-43
AC 29.1587 Performance Information G-45
AC 29.1587A Performance Information G-48
AC 29.1589 Loading Information G-49

CHAPTER 3 - MISCELLANEOUS GUIDANCE (MG), NORMAL CATEGORY ROTORCRAFT

AC 29 MG 1 Certification Procedure for Rotorcraft Avionics Equipment ..... MG 1-1
AC 29 MG 2 Standardized Test Procedure for Rotorcraft DC Electrical System Tests ..... MG 2-1
AC 29 MG 3 Rotorcraft and Systems Certification for Category II Operations ..... MG 3-1
AC 29 MG 4 Full Authority Digital Electronic Controls (FADEC) ..... MG 4-1
AC 29 MG 5 Agricultural Dispensing Equipment Installation ..... MG 5-1
AC 29 MG 6 Emergency Medical Service (EMS) Systems, Installations, Interior Arrangements, and Equipment ..... MG 6-1
AC 29 MG 7 Structural Condition Indicators ..... MG 7-1
AC 29 MG 8 Substantiation of Composite Rotorcraft Structure ..... MG 8-1
AC 29 MG 9 Rotorcraft One-Engine-Inoperative (OEI) Power Assurance ..... MG 9-1
AC 29 MG 10 Advisory Material for Substantiation of Emergency Flotation System ..... MG 10-1
AC 29 MG 11 Fatigue Evaluation of Transport Category Rotorcraft Structure (Including Flaw Tolerance) ..... MG 11-1
AC 29 MG 12 External Loads ..... MG 12-1

AC 29 Appendix A - (*reserved) (Instructions for Continued Airworthiness)* ..... Apdx A-1
AC 29 Appendix B - Airworthiness Guidance for Rotorcraft Instrument Flight ..... Apdx B-1
AC 29 Appendix C - (*reserved) (Icing Certification*)……..…Apdx C-1
AC 29 Appendix D - *(reserved) (Criteria for Demonstration of Emergency Evacuation Procedures Under § 29.803)* ……Apdx D-1

FIGURES

The first digits in the figure number are the same as the related paragraph number. The digits after the hyphen are the number within the paragraph. Most figures are located at the end of the related paragraph.

Figure No.	Title	Page
AC 29.45-1	H-V Requirements	B-21
AC 29.45-2	IGE Controllability Requirements	B-22
AC 29.45-3	Shaft Horsepower vs. Turbine Outlet Temperature - Sea Level Standard Day	B-23
AC 29.45-4	Uninstalled Takeoff Power Available	B-24
AC 29.45-5	Installed Takeoff Power Available, Anti-Ice Off, 400 RPM	B-25
AC 29.45-6	Power Assurance Check Chart	B-26
AC 29.53-1	Takeoff Performance Category A	B-33
AC 29.53A-1	Takeoff Performance Category A	B-35
AC 29.59-1	Category A Vertical Takeoff Profile Ground Level Heliport	B-44
AC 29.59-2	Category A Vertical Takeoff Profile Pinnacle	B-45
AC 29.59A-1	Category A Vertical Takeoff Profile Ground Level Heliport	B-54
AC 29.59A-2	Category A Vertical Takeoff Profile Elevated Heliport	B-55
AC 29.63-1	Conventional Takeoff Profile Category B	B-58
AC 29.71-1	Autorotational Characteristics - Typical	B-67
AC 29.75-1	Category A Conventional Landing - Clear Heliport	B-77

Figure No.	Title	Page
AC 29.75-2	Category A Vertical Landing	B-78
AC 29.75A-1	Category A Conventional Landing - Clear Heliport	B-87
AC 29.75A-2	Category A Vertical Landing	B-88
AC 29.79-1	Height-Velocity Diagram	B-96
AC 29.79-2	Altitude/Weight Accountability	B-97
AC 29.175-1	Static Longitudinal Stability	B-113
AC 29.251-1	Demonstration Points	B-125
AC 29.337-1	Load Factor Gross Weight Curve	C-7
AC 29.351-1	Sample Yaw/Forward Speed Diagram	C-12
AC 29.351-2	Sample Yaw/Forward Speed Diagram	C-14
AC 29.427-1	(View Looking Forward)	C-28
AC 29.427-2	(View Looking Forward)	C-29
AC 29.571-1	Comparison Percent of Time in Level Flight	C-56
AC 29.621-1	Example of Casting Load Sheet Retract Actuator Support-Landing Gear	D-23
AC 29.621-2	Castings to be Static Tested for Model XYZ	D-25
AC 29.773-1	Cockpit Visibility	D-72
AC 29.801-1	Sea State Code - World Meteorological Organization	D-94
AC 29.863-1	Flammable Fluids Fire Protection Flow Chart	D-126
AC 29.865-1	Summary of Part 133 Rotorcraft Load Combinations Certifiable Under § 29.865	D-134
AC 29.877-1	Continuous Icing-Temperature vs. Altitude Limits	D-155

Figure No.	Title	Page
AC 29.877-2	Intermittent Icing-Temperature vs. Altitude Limits	D-156
AC 29.877-3	Mean Effective Drop Diameter-Microns	D-157
AC 29.877-4	Intermittent Icing-Liquid Water Content vs. Drop Diameter	D-158
AC 29.877-5	Supercooled Clouds	D-159
AC 29.903C-1	Estimated Path of Fragments	E-23
AC 29.903C -2	Single One-Third Disc Fragment	E-24
AC 29.903C -3	Intermediate and Small Pieces of Debris	E-25
AC 29.903C -4	Blade Fragment Definition	E-26
AC 29.903C -5	Distribution of Translational and Rotational Kinetic Energy of Rotor-Component Fragments as a Function of Fragment Size ⊖	E-27
AC 29.903C -6	Cross Section through Aircraft at Plane of Rotation of the Engine Disk Fragment	E-28
AC 29.923A-1	Rotor Drive System Endurance	E-48
AC 29.923A-2	Takeoff Run Portion of Rotor Drive System Endurance Test If 2 ½ Minute OEI Rating is Requested.	E-49
AC 29.923A-3	Takeoff Run Portion of Rotor Drive System Endurance Test If 30 Second/2 Minute OEI Rating is Requested.	E-50
AC 29.931-1	Cantilevered Shaft, First Critical Speed	E-62
AC 29.931-2	Shaft Between Support Bearings, First Critical Speed	E-62
AC 29.952-1	Static Tension and Shear Loading Modes	E-87
AC 29.952-2	Hose Assembly Tests	E-88

Figure No.	Title	Page
AC 29.952-3	Minimum Average and Individual Loads for Hose and Hose-End Fitting Combinations	E-89
AC 29.952-4	Typical Method of Breakaway Fuel Fitting Load Calculations	E-90
AC 29.952-5	Typical Methods of Frangible or Deformable Attachment Load Calculations (Frangible Bolts)	E-91
AC 29.952-6	Typical Methods of Frangible or Deformable Attachment Load Calculations (Frangible Baffle)	E-92
AC 29.955A-1	Fuel Flow	E-102
AC 29.1041-1	Additional Cooling Test Point	E-139
AC 29.1045-1	All-Engine-Critical Altitude Additional Cooling Test Point	E-146
AC 29.1191-1	Table of Materials and Gages Acceptable for Fireproof Protective Devices with Flat Surface Geometries	E-190
AC 29.1329-1	Deviation Profile	F-46
AC 29.1329-2	Operational Limitation	F-48
AC 29.1419-1	Continuous Icing-Temperature vs. Altitude Limits	F-92
AC 29.1419-2	Intermittent Icing-Temperature vs. Altitude Limits	F-93
AC 29.1419-3	Continuous Icing-Liquid Water Content vs Drop Diameter	F-94
AC 29.1419-4	Intermittent Icing-Liquid Water Content vs. Drop Diameter	F-95
AC 29.MG 3-1	Category II Approach Evaluation	MG 3-5
AC 29.MG 3-2	Category II Approach Evaluation (cont.)	MG 3-6

Figure No.	Title	Page
AC 29.MG 5-1	Acceptable Ultimate Load Factor for Agricultural Dispensing Equipment Design	MG 5-2
AC 29.MG 5-2	Sketch of Tank Pressure Test	MG 5-5
AC 29.MG 6-1	Typical Liquid Oxygen System	MG 6-17
AC 29.MG 6-2	Typical Liquid Oxygen System - Using Combination Valve	MG 6-18
AC 29 MG 9-1	Installed Engine Fuel Flow Capacity Check	MG 9-8
AC 29 MG 11-1	S-N or P-N Curve Usage	MG 11-14
AC 29 MG 11-2	Crack Growth for Single Element Structure	MG 11-17
AC 29 MG 11-3	Crack Growth for Remaining Elements of Multiple Element Structure	MG 11-19
AC 29 MG 12-1	U.S. Operational (Part 133) Rotorcraft-Load Combination Versus Applicable Cargo Type Data and Definition Summary	MG 12-9
AC 29 MG 12-2	Sequential Simulation of Hook Dynamic Roll-Out	MG 12-24
AC 29 MG 12-3	Rescue Devices Chart	MG 12-35
AC 29 MG 12-4	Summary of Relevant Information for U.S. Part 133 Rotorcraft Load Combinations Under § 29.865	MG 12-40
AC 29.APX B-1	Rotorcraft Dynamic Stability Requirements for IFR	Apdx B-20

Abbreviations and Definitions

AC advisory circular
ACO aircraft certification office
ADF automatic direction finding
ADI attitude direction indicator
AEO all engines operating
AFCS automatic flight control systems
AGL above ground level
AHRS attitude heading reference system
Amdt. Amendment
APU auxiliary power unit
ATC air traffic control
BIM blade inspection method
CAM cockpit area microphone
CAR Civil Air Regulations
CAS calibrated air speed
CBIM cockpit blade inspection method
CDP critical decision point
CG center of gravity
CPS cycles per second
CRFS crash resistant fuel system
CRT cathode ray tube
CVR cockpit voice recorder
DER designated engineering representative
DME distance measuring equipment
ECAS engine caution advisory systems
ECU environmental control unit
EFIS electronic flight instrument system
EFP engine failure point
EHE exhaust heat exchanger
ELT emergency locator transmitter
EMI electromagnetic interference
EMS emergency medical service
EOL end of life
FAA Federal Aviation Administration
FADEC full authority digital engine control
FAR Federal Aviation Regulations
FMEA failure mode and effects analysis
FPM feet per minute
FPS feet per second
GPS global positioning system
HF high frequency
HIRF high intensity radiated fields
HRD high rate of discharge
HUMS health and usage monitoring systems
HV height-velocity
IAS indicated airspeed
ICAO International Civil Aviation Organization
ICS inter-communication system
IFR instrument flight rules
IGE in ground effect
IIDS integrated instrument display system
ILS instrument landing system
IMC instrument meteorological conditions
INS inertial navigation system
ISA international standard atmosphere
ISIS integral spar inspection system
ITT inter-turbine temperature
KCAS knots calibrated airspeed
KIAS knots indicated air speed
KTAS knots true airspeed
LDP landing decision point
LWC liquid water content
MCP maximum continuous power
MGT measured gas temperature
MSL mean sea level
MVD median volume diameter
NDI non-destructive inspection
NM nautical mile
NPRM notice of proposed rulemaking
NTSB National Transportation Safety Board
NVG night vision goggles
OAT outside air temperature
OEI one engine inoperative
OGE out of ground effect
PBA pitch bias actuator
PCF post crash fire
PIO pilot induced oscillation
PSIG pounds per square inch gauge
QPL qualified parts list

RFM rotorcraft flight manual
RFMS rotorcraft flight manual supplement
RPM revolutions per minute
RTCA Radio Technical Commission of Aeronautics
RVR runway visual range
SAE Society of Automotive Engineers
SAS stability augmentation system
SCAS stability and control augmentation systems
SRM structural repair manual
SSA system safety analysis
STC supplemental type certificate
STOL short takeoff and landing
TBO time between overhaul
TC type certificate
TCDS type certificate data sheet
TDP takeoff decision point
TIA type inspection authorization
TIR type inspection report
TOT turbine outlet temperature
TSO: technical standard order
TVP true vapor pressure
VBIM visual blade inspection method
VFR visual flight rules
VMC visual meteorological conditions
VOR very high frequency omnidirectional range radio
VSI vertical speed indicator
V/STOL vertical/short takeoff and landing
VTOL vertical takeoff and landing
WAT weight, altitude, temperature

Altitudes

H_D density altitude
H_P pressure altitude

V speeds

V_D diving speed
V_H speed in level flight with maximum continuous power
V_{MO} maximum operating limit speed
V_{NE} never-exceed speed
V_{TOSS} takeoff safety speed for Category A rotorcraft
V_X speed for best angle of climb
V_Y speed for best rate of climb
M_{MO} maximum operating mach number

N speeds

N_F free turbine speed
N_G gas generator speed
N_P power turbine speed
N_R rotor speed

Coefficients

C_D coefficient of drag
C_L coefficient of lift
C_P coefficient of power
C_T coefficient of thrust

CHAPTER 1. PART 21

FAR 21 - GENERAL

CERTIFICATION PROCEDURES FOR PRODUCTS AND PARTS
(Amendment 21-50)

AC 21.16. § 21.16 SPECIAL CONDITIONS.

a. The Process. Chapter 2, Section 1, Paragraph 8 of the Type Certificate Handbook, Order 8110.4A, provides detailed guidance on the special conditions process. However, much of that material has been outdated with the implementation of the Aircraft Certification Directorate Program. Rotorcraft special conditions are processed through the Rotorcraft Standards Staff, ASW-110. That office will assure coordination with the affected agency and industry elements including the Assistant Chief Counsel. All comments will be considered and the disposition will be documented by the Rotorcraft Standards Staff. ASW-100 will issue the special conditions.

b. Basis for Development.

(1) Special conditions are justified on the basis of the existing Part 29 being inadequate or inappropriate due to novel or unusual design features of the rotorcraft to be certificated.

(2) The phrase “novel or unusual” as used in § 21.16 is a very relative term. As used hereafter in applying § 21.16 to justify the issuance of special conditions, “novel or unusual” will be taken with respect to the state of technology envisaged by the applicable airworthiness standards of this subchapter. It must be recognized that in some areas which will vary from time to time, the state of the regulations may somewhat lag the state of the art in new design because of the rapidity in which the state of the art is advancing in civil aeronautical design and because of the time required to develop the experience base needed by the FAA/AUTHORITY to proceed with general rulemaking. Applicants for type certification of a new design have the opportunity to mitigate the impact of not knowing the precise airworthiness standards to be applied for “novel or unusual design features” by consulting with the FAA/AUTHORITY early in their certification planning when such features are suspected or known by the applicant to exist. It should also be recognized that, because of the intentional objective nature of the airworthiness standards of this subchapter, many new design features which might be thought of as “novel or unusual” may already be adequately covered by existing regulations, thus obviating the need to issue special conditions.

(3) Before proposing special conditions, the certification staff should very thoroughly analyze the existing regulations and assure they are inadequate or inappropriate in light of a new and novel design feature.

AC 21.31 § 21.31 TYPE DESIGN. The regulatory basis for requiring data to define the design is contained in § 21.31. This section is self-explanatory and broad enough in scope to give the certification staff access to sufficient data to determine compliance with Part 29.

AC 21.33 § 21.33 INSPECTION AND TESTS.

a. Applicant Responsibility. Section 21.33 requires the applicant to:

(1) Assure the test rotorcraft conforms to the type design. This must be accomplished prior to presentation to the FAA/AUTHORITY for testing.

(2) Conduct all inspections and tests necessary to determine compliance with the airworthiness and noise requirements.

b. FAA/AUTHORITY Responsibility.

(1) The design evaluation engineers should assure that the type design is adequate in their technical area and that the inspections and tests to be conducted are appropriate and sufficient to show compliance with Part 29.

(2) As changes to the rotorcraft are made during the test program, the flight test crew should assure that the appropriate design evaluation engineer concurs with the change and the conformity inspection of the change has been conducted.

AC 21.35 § 21.35 (Amendment 21-59) FLIGHT TESTS.

a. Explanation.

(1) This section outlines the requirements of the applicant for aircraft type certification and should be used in conjunction with FAA Order 8110.4A, Section 5. Section 21.35 requires, in part, that the applicant conduct sufficient flight tests to show compliance with the flight requirements throughout the proposed flight envelope. The results of the applicant's flight test should be submitted to the FAA/AUTHORITY in report form for evaluation to determine what verification flight tests the FAA/AUTHORITY may elect to conduct. The report should conclude that in the applicant's opinion the test aircraft complies with the applicable certification requirements. The FAA/AUTHORITY verification flight test should include, but not be limited to, the critical or marginal results contained in the applicant's flight test report. The FAA/AUTHORITY's role in the certification effort is not envisioned to be one of conducting day-to-day routine flight tests with the applicant, but only to verify his results through limited sampling. In certain tests, such as high altitude testing at a remote mountain site, there is an advantage in conducting flight tests concurrently with the applicant. Additionally, the FAA/AUTHORITY can provide technical flight test

assistance to the applicant in certain cases. This can be done after a cursory review and a letter of authorization is issued to the flight test crew.

(2) Preflight Test Planning. After the applicant's flight test report is reviewed, it should be determined what FAA/AUTHORITY engineering flight tests are necessary. These tests are normally specified in the Type Inspection Authorization (TIA). At the same time the FAA/AUTHORITY must know and agree to the applicant's proposed means of data acquisition, reduction, and expansion of the flight test data. The adequacy of the test instrumentation should be evaluated prior to official type certification tests (reference paragraph AC 21.39).

(3) Order of Testing. The Federal Aviation Regulations are so worded that the results of some flight tests have a definite bearing on the conduct of other tests. For this reason, and to minimize retesting, careful attention should be given to the order of testing. The exact order of testing will be determined only by considering the particular rotorcraft and test program involved. Tests which are particularly important in the early stages of the program are:

(i) Airspeed calibration: All tests involving airspeed depend upon the calibration.

(ii) Engine power available determination.

(iii) Engine cooling.

(4) Test Groupings.

(i) Weight and c.g.: In addition to the regulatory relationship of one test to another, efficient testing requires that consideration be given to the accomplishment of as many tests on a single flight as can be accommodated successfully.

(ii) Special Instrumentation. Similarly, consideration should be given to grouping of tests that involve special instrumentation. Examples of these are takeoff and landing tests which usually require group equipment to record horizontal distance, height, and time. Ground calibration of the airspeed indicating system can be accomplished at the same time. It is the applicant's responsibility to provide the necessary instrumentation.

(5) Functional and Reliability Testing

(i) Section 21.35(b)(2) requires that the applicant determine that "there is reasonable assurance that the aircraft, its components, and its equipment are reliable and function properly." Section 21.35(f)(1) requires a Function and Reliability (F&R) program of 300 hours for turbine engine powered aircraft incorporating engines of a type not previously used in a type certificated aircraft. Section 21.35(f)(2) requires a 150-hour F&R program for all other aircraft. The following reflects general practices

that have been used during rotorcraft certification programs. FAA/AUTHORITY have supported proposals which gave F&R test time credit for certification testing in lieu of dedicated F&R testing. In establishing such credit, the following should be considered:

(A) The point in time in which the rotorcraft reaches substantial conformity with the approved type design.

(B) The extent and complexity of the new design.

(C) For a previously certified rotorcraft, the F&R program requirement should be commensurate with the modification or change in type design and may be zero.

(ii) Historically, for major rotorcraft type certification programs, flight time credit has been limited so as to require an irreducible minimum of 50 hours of dedicated F&R flight time. For rotorcraft programs that involved new engine installations (mature engine design) or drive train/rotor system changes on previously certified aircraft (TC amendments or STC's), flight time credit has been liberal and often resulted in very little or no dedicated F&R testing.

b. Procedures.

(1) Type Certification Flight Tests.

(i) Prior to initiating official FAA/AUTHORITY flight tests, a conformity inspection of the test aircraft must be accomplished. This is needed to assure that the test aircraft is in the proper configuration or "conforms" to the engineering drawings and documents that have been submitted to FAA/AUTHORITY, evaluated, and approved. It is absolutely essential to know the configuration being tested in any engineering flight evaluation. Conformity inspection prior to TIA flight tests assures that testing will not be wasted because of configuration uncertainties.

(ii) FAA Order 8110.4A, paragraph 67, contains a requirement that the applicant must keep the FAA/AUTHORITY advised of any configuration changes to the aircraft. The manufacturing inspector should keep the FAA/AUTHORITY flight test pilot apprised of any change which may affect safety of the test aircraft or may influence test results.

(iii) Results of the conformity inspection and the engineering flight test program must be documented. This is normally done in the Type Inspection Report (TIR). Results may be documented in any acceptable engineering format. The report should be in sufficient detail to clearly show how compliance with each appropriate section of the rules was determined.

(iv) The flight test pilot must assure that the FAA/AUTHORITY manufacturing inspector and certification engineer are aware of all configuration

changes found necessary as a result of FAA/AUTHORITY tests. The manufacturing inspector is responsible for assuring that all changes are incorporated into production drawings after the design data reflecting the change have been approved by the certification engineer.

(v) Additional flight test responsibilities, procedures, and requirements during the certification flight test process are contained in FAA Order 8110.4A, Section 5, Flight.

(2) Function and Reliability Tests.

(i) A comprehensive and systematic check of all aircraft components must be made to assure that they perform their intended function and are reliable.

(ii) F&R testing should be accomplished on an aircraft which conforms to the type design. Non-conformities must be documented and accepted. F&R testing should follow the type certification testing described in paragraph AC 21.35b(1) above to assure that significant changes resulting from type certification tests are incorporated on the aircraft prior to F&R tests.

(iii) All components of the rotorcraft should be periodically operated in sequences and combinations likely to occur in service. Ground inspections should be made at appropriate intervals to identify potential failure conditions; however, no special maintenance beyond that described in the aircraft maintenance manual should be allowed.

(iv) A complete record of defects and failures should be maintained along with required servicing of aircraft fluid levels. Results of this record should be consistent with inspection and servicing information provided in the aircraft maintenance manual.

(v) A certain portion of the F&R test program may focus on systems, operating conditions, or environments found particularly marginal during type certification tests.

(vi) A substantial portion of the flying should be on a single aircraft. The flying should be carried out to an intensive schedule on an aircraft that is very close to the final certification standard, operated and maintained as though it were in service. A range of representative ambient operating conditions and sites should be considered. It is acceptable for non-F&R flight testing conducted at various sites and in varying ambient conditions to be used to satisfy the F&R requirements for those conditions.

AC 21.39. § 21.39 (Amendment 21-59) FLIGHT TEST INSTRUMENT CALIBRATION AND CORRECTION REPORT.

a. Explanation. It is the applicant's responsibility to provide instrumentation for all parameters needed to show compliance with the airworthiness regulations.

(1) For those data which are necessary to show compliance with the regulations, a permanent record should be established. A permanent record is acceptable in either graphical or photographic form, and in some instances, a manual recording may be satisfactory.

(2) Regardless of the record form, the accuracy of the record must be established by reference to a laboratory standard traceable to the National Bureau of Standards.

(3) If multiplexing is used, the time base must be synchronized to a reference point from which the magnitude of each parameter can unquestionably be determined. Also, the sampling rate should be sufficiently frequent to assure that the maximums, minimums, and trends of magnitude of the parameter are recorded with respect to time.

b. Procedures. Prior to conducting flight tests, the FAA/AUTHORITY flight test team should review the applicant's flight test instrumentation calibration and correction report.

(1) Normally the frequency of instrument calibration should not exceed 90 days. However, the frequency of recalibration varies with the consistency of the instrumentation under consideration. For example, cyclic and collective position is sometimes calibrated immediately before and after a flight where these parameters are used to provide critical flight data. Six months is a typical interval for recording/signal conditioning and nonstrain gage sensors, while one year is typical for strain gauged components. Also, environmental effects such as vibration, humidity, temperature, etc., should be considered when determining whether recalibration is necessary.

(2) The highest and lowest magnitude of the parameter being recorded should be considered when establishing the scale for instrumentation. Ideally, the highest magnitude throughout the flight would fall on the maximum indicating point of the recording.

CHAPTER 2. PART 29
AIRWORTHINESS STANDARDS
TRANSPORT CATEGORY ROTORCRAFT

SUBPART A - GENERAL

AC 29.1. § 29.1 (Amendment 29-21) APPLICABILITY.

a. Explanation. This section prescribes the rotorcraft categories eligible for certification under this part. There is no minimum weight limit for certification under Part 29; however, Part 27 is applicable to rotorcraft with maximum weights of 6,000 pounds or less so that Part 29, in effect, deals with rotorcraft which have a maximum weight greater than 6,000 pounds. In Part 29, there are two categories of rotorcraft, Category A and Category B.

(1) Category A. Category A provides the most rigid rules, requiring multiengine design with independent engines, fuel systems, and electrical systems. Category A design requires that no single failure can cause loss of more than one engine. Although there is no limit on maximum weight, Category A rotorcraft are certificated at a weight which will assure a minimum climb capability in the event of engine failure and with adequate surface area to assure a safe landing in the event an engine fails early in the takeoff run.

(2) Category B. Category B rotorcraft may be single or multiengine and may not have a maximum weight greater than 20,000 pounds. Category B rotorcraft are not required to have the capability for continued flight with an engine failed.

(i) Without Engine Isolation. For single engine rotorcraft and multiengine rotorcraft without engine isolation, the height-velocity diagram is conducted with sudden failure of all engines and the takeoff distance is measured through the clear area of the diagram to the 50-foot point with all engines operating. The landing distance is determined with all engines inoperative.

(ii) With Engine Isolation. Category B multiengine rotorcraft may be certificated with the Category A design features of Part 29. These rotorcraft meet the design requirements of Category A, but the performance requirements of Category B. Stay-up ability after an engine failure is not assured. The takeoff is conducted with all engines operating, while the height velocity diagram and landing distances are determined with the most critical engine inoperative.

(3) Dual Certification, Categories A and B. A multiengine rotorcraft may be certificated under both categories provided requirements for both categories are met. This combination will typically result in conditions (1) and (2)(ii) above with the primary differences being the gross weight allowed and the surface areas required for takeoff.

b. Procedures. None.

AC 29.1A. § 29.1 (Amendment 29-39) APPLICABILITY.

a. Explanation. Amendment 29-39 revised the reference in § 29.1(e) from §§ 29.79 to 29.87, which is a redesignation of the section number for the height-velocity envelope. This section prescribes the rotorcraft categories eligible for certification under this part. There is no minimum weight limit for certification under Part 29; however, Part 27 is applicable to rotorcraft with maximum weights of 6,000 pounds or less so that Part 29, in effect, deals with rotorcraft which have a maximum weight greater than 6,000 pounds. In Part 29, there are two categories of rotorcraft. Category A and Category B.

(1) Category A. Category A provides the most rigid rules, requiring multiengine design with independent engines, fuel systems, and electrical systems. Category A design requires that no single failure can cause loss of more than one engine. Although there is no limit on maximum weight, Category A rotorcraft are certificated at a weight which will assure a minimum climb capability in the event of engine failure and with adequate surface area to assure a safe landing in the event an engine fails anywhere in the flight envelope, including takeoff or landing operations.

(2) Category B. Category B rotorcraft may be single or multiengine and may not have a maximum weight greater than 20,000 pounds. Category B rotorcraft are not required to have the capability for continued flight with one engine inoperative.

(i) Without Engine Isolation. For single engine rotorcraft and multiengine rotorcraft without engine isolation, the height-velocity diagram is conducted with sudden failure of all engines and the takeoff and landing distances are measured with all engines operating.

(ii) With Engine Isolation. Category B multiengine rotorcraft may be certificated with the Category A design features of Part 29. These rotorcraft meet the design requirements of Category A but the performance requirements of Category B. Stay-up ability after an engine failure is not assured. The takeoff distance is determined with all engines operating. The landing distance, at the option of the applicant, may be determined with the critical engine inoperative or with all engines operating. The height-velocity diagram is determined following failure of the most critical engine.

(3) Dual Certification, Categories A and B. A multiengine rotorcraft may be certificated under both categories provided requirements for both categories are met. This combination will typically result in conditions (1) and (2)(ii) above with the primary differences being the gross weight allowed and the surface areas required for takeoff.

b. Procedures. The guidance material in paragraph AC 29.1 does not apply to rotorcraft certified with Amendment 29-39 or later.

AC 29.2. § 29.2 (Amendment 29-32) SPECIAL RETROACTIVE REQUIREMENTS.

a. Explanation.

(1) Amendment 29-32 requires a combined shoulder harness and safety belt (also called a torso restraint system) at each occupant's seat for all rotorcraft manufactured after September 16, 1992.

(2) The design features of the restraint system are mainly contained in this section rather than having to refer to other sections within Part 29 except for a general reference to the differing strength standards between earlier static strength only standards and the static and dynamic strength standards of Amendment 29-29.

(3) Combined safety belt and harness strength standards system follows:

(i) Those rotorcraft type designs certificated to static strength standards alone prior to Amendment 29-29, such as 4 g's forward may use belt and harness systems, characterized as 1,500 pounds strength systems, provided they comply with those standards. TSO C22f and earlier restraint systems have such ratings. A combined belt and harness with a 1,500 pounds rating, which comply with the Part 29 standards for the rotorcraft type design, but are not necessarily TSO approved, may be approved as a part of the type design. Such design information for a non-TSO'd item would be included in a note on the aircraft type certificate data sheet (TCDS) or specification sheet by part number as "required equipment." TSO C114-approved torso restraint systems, characterized as 3,000 pounds strength system, may be used provided the design features comply with this section, but no special information on the TCDS is necessary.

(ii) Those rotorcraft type designs certified to dynamic test requirements of Amendment 29-29 should use torso restraint systems approved under TSO C114 or approved under equivalent standards such as those contained in Part 29.

(4) Load Distribution and Design Requirements. Although not stated in § 29.2, a 60 percent and 40 percent load distribution between the safety belt and harness, respectively, is required in § 29.785(g). The safety belt should withstand 100 percent if the safety belt is capable of being used alone. Also, the safety belt or harness attachments to the seat or structure should include the 1.33 factor described in § 29.785(f)(2) of Amendment 29-24 for those rotorcraft with that certification criteria or should include the 1.15 factor as described in § 29.625 (and predecessor § 7.355(c)(2) CAR Part 7) standards for those rotorcraft with the earlier certification criteria. A factor is used whether test results or analysis methods are used for static substantiation of the seating systems. Refer to paragraph AC 29.785b(1)(i) (§ 29.785).

(5) The companion operating rule change of Amendment 91-220, amended § 91.205 (Amendment 91-223), affecting the aircraft equipment requirements.

Operating rule § 91.107(a) already requires use of the harness whenever the aircraft seat is so equipped.

b. Procedures.

(1) A TSO-approved combined safety belt and harness or torso restraint system may be used provided the installation requirements in § 29.2 are satisfied. A combined belt and harness (not necessarily TSO approved) may be approved as a part of the rotorcraft type design and so noted on the aircraft specification or TCDS.

(2) Structural analysis or static test may be used. For those rotorcraft designs that are subject to the dynamic test standards of § 29.562, the torso restraint system is required to be qualified for the particular use or installation in each rotorcraft type design. A dynamic test may be required for alternate restraint systems as well as the originally approved system. TSO C114 approval does not constitute approval for installation of a restraint system in a rotorcraft design subject to dynamic tests.

(i) AC 20-137 dated March 30, 1992, concerns in part the dynamic test standards of Amendment 29-29.

(ii) AC 23-4 dated June 20, 1986, concerns static test procedures for small airplane seats and restraint systems. (Certain small airplanes manufactured after December 12, 1986, should have harnesses for each seat also.) A test proposal for rotorcraft installations may adopt procedures appropriate to the particular installation. The 60/40 percent distribution is sufficiently achieved when the blocks in Figure 4 of AC 23-4 are used.

(iii) The static design side load for the harness installation may be proven by test or analysis using the load distribution previously noted. For “older” designs, the side load of § 29.561(b)(3)(iii) is 2.0g, and for later designs (Amendment 29-29 and later), it is 8.0g.

CHAPTER 2. PART 29
AIRWORTHINESS STANDARDS
TRANSPORT CATEGORY ROTORCRAFT

SUBPART B - FLIGHT

GENERAL

AC 29.21. § 29.21 (Amendment 29-24) PROOF OF COMPLIANCE.

a. Explanation.

(1) This section provides a degree of latitude for the FAA/AUTHORITY test team in selecting the combination of tests or inspections required to demonstrate compliance with the regulations. Compliance must be shown for each combination of gross weight, center of gravity, altitude, temperature, airspeed, rotor RPM, etc. Engineering tests are designed to investigate the overall capabilities and characteristics of the rotorcraft throughout its operational envelope. Testing will identify operating limitations, normal and emergency procedures, and performance information to be included in the FAA/AUTHORITY-approved portion of the flight manual. The testing must also provide a means of verifying that the rotorcraft's actual performance, structural design parameters, propulsion components, and systems operations are consistent with all certification requirements.

(2) Section 21.35 requires, in part, that the applicant show compliance with the applicable certification requirements, including flight test, prior to official FAA/AUTHORITY Type Inspection Authorization (TIA) testing. Compliance in most cases requires systematic flight testing by the applicant. After the applicant has submitted sufficient data to the FAA/AUTHORITY showing that compliance has been met, the FAA/AUTHORITY will conduct any inspections, flight, or ground tests required to verify the applicant's test results. FAA/AUTHORITY compliance may be partially determined from tests conducted by the applicant if the configuration (conformity) of the rotorcraft can be verified. Compliance may be based on the applicant's engineering data, and a spot check or validation through FAA/AUTHORITY flight tests. The FAA/AUTHORITY testing should obtain validation at critical combinations of proposed flight variables if compliance cannot be inferred using engineering judgment from the combinations investigated.

(3) Performance tests include minimum operating speed (hover), takeoff and landing, climb, glide, height-velocity, and power available. Certain other performance tests, such as Category A, are conducted to meet specific requirements. Detailed performance test procedures and allowable extrapolation or simulation limits are contained in the respective paragraphs in this order.

(i) Hover tests are conducted to determine various combinations of altitude, temperature, and gross weight for both in-ground-effect (IGE) and, if required,

out-of-ground effect (OGE) conditions. From these data the hover ceiling may be calculated.

(ii) Takeoff and landing tests are conducted to determine the total distance to takeoff and land at various combinations of altitude, temperature, and gross weight.

(iii) Climb tests establish the variations of rate-of-climb at the best rate-of-climb or published climb airspeed(s) at various combinations of altitude, temperature, and gross weight.

(iv) Height-velocity tests are conducted to determine the boundaries of the height versus airspeed envelope within which a safe landing can be accomplished following an engine failure.

(v) Power available tests are conducted to verify or reestablish the calculated installed specification engine performance model on which published performance is based.

(4) The purpose of rotorcraft stability and control tests is to verify that the rotorcraft possesses the minimum qualitative and quantitative flying qualities and handling characteristics required by the applicable regulations. In order to assess the handling qualities, standardized test procedures must be utilized and the results analyzed by accepted methods. Section 29.21(a) allows calculation and inference which includes extrapolation and simulation, whereas § 29.21(b) requires demonstration of controllability, stability, and trim. Combinations of §§ 29.21(a) and 29.21(b) may be used to show compliance to the operating envelope limits. Test methods and equipment are described in individual paragraphs of this advisory circular.

b. Procedures.

(1) Efforts should begin early in the certification program to provide advice and assistance to the applicant to insure coverage of all certification requirements. The applicant should develop a comprehensive test plan which includes the required instrumentation.

(2) The tests and findings specified in paragraph a(3) above are required of the applicant to show basic airworthiness and probable compliance with the minimum requirements specified in the applicable regulations. After these basic findings have been submitted and reviewed, a Type Inspection Authorization, or equivalent, can be issued. The FAA/AUTHORITY will develop a systematic plan to spotcheck and confirm that compliance with the regulations has been shown. The test plan will consider combinations of weight, center of gravity, RPM and cover the range of altitude and temperature for which certification is requested.

AC 29.21A. § 29.21(Amendment 29-39) PROOF OF COMPLIANCE.

a. Explanation. Amendment 39 added § 29.83 which changes the requirements for determination of landing distance for Category B rotorcraft. This amendment requires landing distance to be determined with all engines operating within approved limits.

b. Procedures. The guidance material presented in paragraph AC 29.21 continues to apply.

AC 29.25. § 29.25 (Amendment 29-12) WEIGHT LIMITS.

a. Explanation.

(1) This section is definitive and specifies criteria for establishing maximum and minimum certificating weights. These weights may be based on those selected by the applicant, design requirements, or the limits for which compliance with all applicable flight requirements has been shown.

(2) Typical requirements that may establish the maximum and minimum weight limits include:

Maximum: Structural limits, performance requirements, stability, and controllability requirements.

Minimum: Autorotative rotor RPM, stability, and controllability requirements.

(3) Jettisonable External Cargo.

(i) Paragraph (c) was added by Amendment 29-12 to provide, in the certification standards, a basis for approving an increase in gross weight (exceed standard limits) that would be an external jettisonable load. The attachment device standards were moved from Part 133 (Amendment 133-5) to Parts 27 and 29. Section 29.865, “External load attaching means,“ now contains the standards, including design features, for the attaching devices. Cargo hoists and hooks were envisioned. Prior to these amendments, type design approvals were made under Part 133 and the policy in Review Cases Nos. 37 and 55 of FAA Order 8110.6 whenever the standard limits were exceeded.

(ii) In the preamble of Amendment 29-12 (Proposal 2-99, 41 FR 55454, December 20, 1976) the agency stated, in part, that “...§ 29.25(c) is intended to provide only a total weight standard for approving the rotorcraft structure (and propulsion systems) for operation under Part 133.” As indicated in § 29.865, fatigue substantiation of the external cargo attaching means is not required. The rotorcraft structure, rotors, transmissions, engines, etc., are subject to evaluation under § 29.571 for external cargo

approval whenever the “standard” structural limitations are exceeded (Review Case Nos. 37 and 55).

(iii) Whether or not the standard limitations are exceeded, the flight characteristics evaluations/standards of § 133.41 are appropriate even for engineering approval. This Part 133 standard is also applicable for the individual operator to obtain his operating certificate. The operator may use an FAA/AUTHORITY approved RFM supplement for external load operations to prepare a rotorcraft load combination flight manual required by § 133.47.

b. Procedures.

(1) It may not be possible to demonstrate quantitatively all the flight requirements at the minimum weight because of test instrumentation requirements. The test team must be assured that the rotorcraft complies with the applicable requirements at the lowest permissible flying weight. This evaluation may be done qualitatively, with the test instrumentation removed, and with minimum crewmembers if no critical areas exist or are anticipated. Additionally, reasonable extrapolation may be warranted. However, if critical areas at minimum flying weights are apparent, extrapolation should not be permitted.

(2) Whenever a gross weight increase (§ 29.25(c)) is requested, a TIA evaluation is necessary to evaluate the new limitations and ensure that § 133.41 for typical or representative cargo shapes and weights (density) is satisfactory. All possible combinations of weights and shapes are not evaluated. The representative configurations may be noted in the RFM or RFM supplement for the operator’s information. Sections 133.41 and 133.47 must be satisfied by the individual operator for the particular case at hand. The approved RFM or RFM supplement should provide the necessary limitations and any other information about the representative cargo configurations evaluated. Section 133.41 also permits the operator to obtain approval of additional and unique cargo configurations provided the approved limitations are observed. Paragraph AC 29.1581 concerns the RFM and its contents.

(3) See paragraph AC 29.571, § 29.571, for fatigue substantiation and external cargo considerations.

(4) Refer to AC 133-1A, Rotorcraft External-Load Operations in Accordance with FAR Part 133, October 16, 1979, for further information on airworthiness and flight manual policy.

AC 29.27. § 29.27 (Amendment 29-3) CENTER OF GRAVITY LIMITS.

a. Explanation.

(1) This regulation is definitive and requires that the center of gravity limits be defined. Proof of compliance with all applicable flight requirements is required within

the range of established CG's. Along with the longitudinal CG limits, the lateral CG limits should either be established or determined to be not critical.

(2) Ballast is usually carried during the flight test program to investigate the approved gross weight/center of gravity limits. Lead is the most commonly used form of ballast during rotorcraft flight testing although other types of ballast, such as water, may serve just as well. Water may have the added benefit of being jettisonable during critical flight test conditions. Care must be taken regarding the location of ballast. The strength of the supporting structures should be adequate to support such ballast during the flight loads that may be imposed during a particular test and for the ultimate inertia forces of § 29.561(b)(3). Of critical importance is the method of securing the ballast to the desired locations. To avoid any undesired in-flight movements of the ballast, a positive method of constraint is mandatory. The flight test crews should also visually verify the amount, location, and integrity of the ballast. The effects of mass moment of inertia on the flight characteristics due to the ballast locations should also be considered. The mass moment of inertia of the test rotorcraft should, to the extent possible, be the same as that expected in normal, approved loadings, especially during tests involving dynamic inputs.

b. Procedures.

(1) Center of gravity locations and limits are of prime importance to rotorcraft stability and safety of flight. The primary concern is establishment of the longitudinal center of gravity limits. Lateral center of gravity limits with respect to longitudinal center of gravity limits are also important. The design of the rotorcraft is usually such that approximate lateral symmetry exists. This lateral symmetry can be upset by lateral loadings resulting in the necessity to establish lateral center of gravity limits. There are two characteristics which may be seriously affected by loading outside the established center of gravity limits; these are stability and control. The established center of gravity limits must be such that as fuel is consumed, it is possible for the rotorcraft to remain within the established limits by acceptable loading and/or operating instructions.

(2) Structural limits may restrict the maximum forward longitudinal center of gravity limits. However, in most cases it is the maximum value established wherein adequate low speed control power exists to meet such requirements as § 29.143(c). Likewise, the maximum aft center of gravity limit may be a "structural limit," but it usually is determined during flight test after the rotorcraft's handling qualities tests have been conducted. Additional items which may influence the maximum aft center of gravity limits may be malfunctions of automatic stabilization equipment, excessive rotorcraft attitudes during critical phases of flight, or adequate control power to compensate for an engine failure.

(3) Lateral center of gravity limits have become more critical because of the ever increasing utilization of the rotorcraft for such things as unusual and unsymmetric lateral loads, both internal and external. Maximum allowable lateral center of gravity limits have also influenced the results of the unusable fuel determination.

(4) Summarizing, it is of prime importance that longitudinal and lateral center of gravity limits be determined so that unsafe conditions do not exist within the approved altitude, airspeed, ambient temperature, gross weight, and rotor RPM ranges. All relevant malfunctions must be considered.

AC 29.29. § 29.29 (Amendment 29-15) EMPTY WEIGHT AND CORRESPONDING CENTER OF GRAVITY.

a. Explanation. The empty weight of the rotorcraft consists of the airframe, engines, and all items of operating equipment that have fixed locations and are permanently installed in the rotorcraft. It includes fixed ballast, unusable fuel, and full operating fluids except water intended for injection in the engines.

(1) Fixed ballast refers to ballast that is made a permanent part of the rotorcraft as a means of controlling the certificated empty weight CG.

(2) Compliance with paragraph (b) of § 29.29 is accomplished by the use of an equipment list which defines the installed equipment at the time of weighing and the weight moment arm of the equipment.

b. Procedures.

(1) Determination of the empty weight and corresponding center of gravity is primarily the responsibility of a manufacturing inspector and is normally made on a production rotorcraft rather than a prototype. If a manufacturer wishes to avoid weighing each production rotorcraft and has been issued a production certificate, the manufacturer may make a detailed proposal defining the procedures used to establish an empty weight and CG When the proposal is approved, the manufacturer will weigh the first five to ten production rotorcraft and show that the rotorcraft will be within ±1 percent on empty weight and ±0.2 inches on CG After this procedure is established, the empty weight and CG may be computed except that at regular intervals a rotorcraft will be weighed to ensure the tolerances are still being maintained; e.g., one in ten rotorcraft.

(2) For prototype and modified rotorcraft, it is only necessary to establish a known basic weight and CG position (by weighing) from which the extremes of weight and CG travel required by the test program may be calculated. See AC 91-23A, Pilots Weight and Balance Handbook, June 9, 1977, for a sample weight and balance procedure.

(3) The weight and balance should be recalculated if a modification (or series of modifications) to the rotorcraft results in a significant change to the empty weight. Additionally, this change in empty weight should be reflected with the weight and balance information contained in the Rotorcraft Flight Manual (RFM) or Rotorcraft Flight Manual Supplement (RFMS).

c. Ballast Loading and Type.

(1) Ballast loading of the rotorcraft can be accomplished in any manner to achieve a specific CG location. It is acceptable for such ballast to be mounted outside the physical confines of the rotorcraft if the flight test objectives are not affected by this arrangement. In flight test work, loading problems will occasionally be encountered in which it will be difficult to obtain the desired CG limits. Such cases may require loading in engine compartments or other places not designed for load carrying. When this condition is necessary, care should be taken to ensure that local structural stresses are not exceeded or that the rotorcraft flight characteristics are not changed due to increased moments of inertia by attaching the ballast to extreme CG locations which may not be designed for the added weight.

(2) Two types of ballast that may be used in loading are solids or liquid. The solids are usually high density materials such as lead while the liquid usually used is water. In critical tests, the ballast may be loaded in a manner so that disposal in flight can be accomplished. In any case, the load should be securely attached in its loaded position so shifting or interference with safety of flight will not result.

AC 29.31. § 29.31 REMOVABLE BALLAST.

a. Explanation. This regulation provides the option of using removable ballast for operational flights to obtain center of gravity locations that are in compliance with the flight requirement of this Part. Fixed ballast used for flight operations after type certification must be documented in the type design data. Removable ballast is used primarily on small rotorcraft to control the CG with different passenger loadings although this regulation does permit its use on transport rotorcraft. If removable ballast is used, the rotorcraft flight manual must include instructions regarding its use and limitations. See paragraph AC 29.873 for information on ballast provisions.

b. Procedures. None.

AC 29.33. § 29.33 (Amendment 29-15) MAIN ROTOR SPEED AND PITCH LIMITS.

a. Explanation.

(1) General. This rule requires the establishment of power-on and power-off main rotor speed limits and the requirements for low rotor speed warning.

(2) Power-On. The power-on limits should be sufficient to maintain the rotor speed within these limits during any appropriate maneuver expected to be encountered in normal operations throughout the flight envelope for which certification is requested. A power-on range of approximately 3 percent has in the past been the minimum range required due to engine governor and engine operating characteristics. With the introduction of advanced engines and electronic engine controls, there may not be a

need for a range, but one fixed value may suffice. Transient power-on values may also be acceptable provided they are substantiated.

(3) Power-Off. The power-off rotor speed limits should be sufficient to encompass the rotor speeds encountered during normal autorotative maneuvers except for final landing phase (touchdown) for which rotor RPM may be lower than the minimum transient limit for flight, provided stress limits are not exceeded. The limits should also be sufficient to cover the ranges of airspeed, weight, and altitudes for which certification is requested. It is not the intent of the rule to require the minimum and maximum limit values in conjunction with extremes such as maximum/minimum weights and/or high altitude. The minimum and maximum rotor speed requirements should be thoroughly evaluated at normal operation environment; i.e., at altitudes between approximately sea level and 10,000 feet, temperatures not at extremes, and weights as necessary for other tests and as required to readily establish the limit rotor speeds. Spot checks of the autorotative requirements should be made at the extremes of the flight envelope and environmental conditions during normal tests at those conditions. Under conditions where high autorotative rotor speeds may be encountered, it is acceptable for the pilot to adjust the controls to prevent overspeeding of the rotor. At light weight combined with low altitudes and extreme cold temperatures, the normal low pitch setting may not be sufficient to maintain autorotational rotor speed values within limits. If this occurs, the manufacturer may elect to adjust the low pitch stops as a maintenance procedure at extreme ambient conditions provided the flight and maintenance manuals clearly present the rigging requirements and procedures. There must be sufficient “overlap” of ambient conditions between configurations such that rerigging is not required whenever ambient temperature and surface elevation change slightly. Any down rigging of the low pitch stop must continue to ensure adequate clearance between controls and other rotorcraft structure and should be evaluated during flight test. Both the power-on and power-off limits may also be established by encountering critical flapping limits in some approved flight conditions such as high airspeed or sideward flight.

(4) Additional RPM Ranges. Some applicants have elected to certify their aircraft with additional RPM ranges in an attempt to realize additional performance during certain flight conditions or maneuvers such as Category A OEI continued and rejected takeoffs and balked landings. Such additional RPM ranges have been found acceptable as long as all pertinent FAR requirements are fully substantiated for operation in that range. The substantiation should include drive system endurance and flight test verification of performance and flight characteristics during applicable maneuvers, in the additional RPM range. The FAA/AUTHORITY does not define additional RPM ranges as transient since all applicable requirements must be satisfied for approval of that range.

(5) Low Speed Warning. If it is possible under expected operating conditions for the rotor speed to fall below the minimum approved values, the requirement exists for a low rotor speed warning. This warning is required on all single-engine rotorcraft and on multiengine rotorcraft where there is not an automatic increase in remaining

engine(s) power output upon failure of an engine. Although today's multiengine rotorcraft do not require a low rotor speed warning according to the rule, essentially all have warning systems installed. If the minimum power-on and power-off rotor speed limits are different, the warning signal should be at the higher speed, normally the power-on minimum rotor speed. One rotorcraft has a warning system cutout if the collective is full down, and others have other warnings on the engine speed to indicate engine failure. All of these related warning systems must be evaluated with emphasis on ensuring adequate rotor speed.

b. Determination and Testing. Refer to paragraph AC 29.1509 (§ 29.1509) for additional information on rotor limits determination and testing.

SUBPART B - FLIGHT

PERFORMANCE

AC 29.45. § 29.45 (Amendment 29-24) PERFORMANCE - GENERAL.

a. Explanation.

(1) Amendment 29-39 adopts new and revised airworthiness standards for the performance of transport category rotorcraft. As part of this change, several sections within the performance section of Subpart B were renumbered. The performance section of this guidance material has been organized for easy use with rotorcraft certified before or after this amendment. To achieve this, some of the guidance material has been duplicated under different paragraph numbers. A statement at the beginning of each of these paragraphs indicates where other pertinent information can be found.

(2) Section 29.45 lists some of the rules and standards under which the performance requirements are to be met. This paragraph will provide general guidelines that may be used throughout a flight test program. It is impossible to find ideal test conditions and there are many variables which affect the flight test results that must be taken into account. Some of these variables are wind, temperature, altitude, humidity, rotorcraft weight, power, rotor RPM, center of gravity, etc. The test results should be analyzed and expanded by approved methodology within the guidelines of this paragraph. A thorough knowledge of the testing procedures and data reduction methods is essential and good engineering judgment must be used to determine applicable test conditions.

(3) Performance should be based on approved engine power as determined in paragraph b(4) below and not on any transient limits. Approved transient limits are basically for inadvertent overshoots of approved operational limits. Any sustained operation in these transient limit areas usually require some form of special maintenance. However, for such demonstrations as rejected and continued OEI Category A takeoffs and height-velocity (HV) determination, low rotor speeds have been authorized based upon additional structural and drive train substantiation (see paragraph AC 29.33).

(4) Where variations in the parameter on which a tolerance is allowed will have an appreciable effect on the test, the results should be corrected to the standard value of the parameter; otherwise, no correction is necessary.

b. Procedures.

(1) Winds For Testing.

(i) Allowable wind conditions will vary with the type of test and will also be different for different types and gross weight rotorcraft. For example, higher winds can usually be tolerated for takeoff and landing distance tests than for hover performance. Likewise higher winds can sometimes be tolerated during hover performance testing on large, heavy rotorcraft with high rotor downwash velocities than for smaller rotorcraft with rotor downwash velocities. Generally, unless the effects of wind on hover performance tests can be determined and/or accounted for, hover performance testing should be conducted in winds of 3 knots or less.

(ii) Past experience has shown that a steady wind of 0 to 10 knots will result in acceptable takeoff and landing performance if distances are corrected for the winds measured during these tests. This is not the case for vertical takeoffs and landings. To obtain consistent and repeatable vertical performance data, the same general wind criteria used to obtain hover performance; i.e., up to 3 knots, should be adhered to for vertical performance determination. In actuality, a rotorcraft may exhibit reduced IGE hover performance in winds from 3 to 15 knots due to partial immersion of the main rotor in its own vortex. Since the height-speed envelope determination is affected by wind just as vertical takeoff and landing performance are, the same allowable winds for testing should be adhered to for HV testing; i.e., 0 to 3 knots.

(iii) As can be seen from the foregoing, there is no such thing as an exact allowable wind for a particular test or rotorcraft. The flight test team must decide on the allowable wind for each condition based on all available information and their engineering judgment. The following summary of allowable wind conditions are given for general guidance only:

(A) Hover performance - 0 to 3 knots.
(B) Conventional takeoff and landing - 0 to 10 (data to be corrected)
(C) Vertical takeoff and landing - 0 to 3 knots
(D) Height-velocity - 0 to 3 knots

(iv) A means should be provided to measure the wind velocity, direction, and ambient air temperature at the rotor height for any particular tests. The wind effects on required runway length for takeoff and landing distances may be shown in the flight manual.

(v) Full wind credit may be given for conventional takeoff and landing field lengths. This credit should not be more than the nominal wind component along the takeoff or landing path opposite to the direction of flight.

(2) Altitude Effects. Using FAA/AUTHORITY-approved methodology, hover, takeoff, and landing, performance may be extrapolated and/or interpolated from test data up to a maximum of ±4,000 feet. Experience has shown that IGE handling qualities, height-velocity, and engine operating characteristics should not be extrapolated more than approximately 2,000 feet density altitude from the test altitude.

Cruise stability/controllability tests should be evaluated at least at two different altitudes, the lowest practical altitude and approximately the highest cruise altitude requested for approval. This can allow an interpolation of approximately 10,000 feet. As in all testing, extrapolation and/or interpolation should only be considered if all available information and engineering judgment indicate that regulatory compliance can be met at the untested conditions.

(3) Altitude Limitations.

(i) Explanation.

(A) Two altitudes are normally presented in the RFM to define the operating envelope of a rotorcraft:

- Maximum operating altitude; and,
- Maximum takeoff and landing altitude.

(B) Maximum operating altitude, is an operating limitation required by § 29.1527 and delineates the maximum altitude up to which operation is allowed. This altitude normally constitutes the maximum cruise or enroute altitude.

(C) Maximum weight, altitude and temperature for takeoff and landing constitutes a limitation. The maximum takeoff and landing altitude may be coincident with but never above the maximum operating altitude limitation. Takeoff and landing and hover ceiling data and presentation requirements are presented in §§ 29.51, 29.53 , 29.59, 29.63, 29.73, 29.1583 and 29.1587.

(ii) Procedures.

(A) In establishing the maximum takeoff and landing altitude, the following tests are normally required:

(1) Takeoff (§§ 29.51-29.63)

(2) Climb (§§ 29.64-29.67)

(3) Performance at minimum operating speed (§ 29.49)

(4) Landing (§ 29.75)

(5) Limiting height-speed envelope (§ 29.87)

(6) IGE controllability (§ 29.143c)

(7) Cooling (§§ 29.1041-29.1045)

(8) Engine operating characteristics (§ 29.939)

Specific guidance on test methodology and data requirements is provided in applicable paragraphs of this AC.

(B) As detailed in subparagraph b(2) above, the maximum allowable extrapolation of H-V, IGE controllability and engine operating characteristics is ±2,000 feet. Therefore, the maximum takeoff and landing altitude presented in the RFM is not normally more than 2,000 feet above the density altitude experienced at the high altitude test site.

(C) Prior to Amendment 29-21, H-V information was an operating limitation. With the adoption of Amendment 29-21, the H-V curve is performance information for Category B rotorcraft with nine or less passenger seats but remains a limitation for Category A rotorcraft and Category B rotorcraft with 10 or more passenger seats.

(D) Prior to Amendment 29-24, IGE controllability was required in 17 knots of wind to the maximum takeoff and landing conditions. With the adoption of Amendment 29-24, if IGE or OGE hover performance is presented for a Category B rotorcraft to an altitude in excess of that for which IGE controllability at 17 knots is presented, the maximum safe wind demonstrated for hover operations must be presented in the RFM. The amendment did not change the requirement for Category A rotorcraft.

(E) The requirements for data collection and presentation in the RFM vary depending upon the certification basis of the rotorcraft. These requirements are presented by regulation and amendment in figures AC 29.45-1 and AC 29.45-2.

(F) The maximum takeoff and landing altitude may be extrapolated no greater than the values given in paragraph b(2) above and not above the lowest limiting altitude resulting from the requirements listed in subparagraph A of this paragraph.

(4) Temperature Effects.

(i) Background.

(A) The regulations prohibit any unsafe design feature throughout the range of environmental conditions for which certification is requested. The regulations also require that the performance and handling qualities be determined over the approved range of atmospheric variables selected by the applicant.

(B) Substantiation of temperature effects on performance and handling characteristics is required throughout the approved temperature range. In the past, approved analyses were frequently accepted for determining the extreme temperature effects on performance and flight characteristics. With the introduction of newer, higher

performance rotorcraft, advanced rotor blade designs, higher airspeeds, and blade mach numbers, the previous methods have proven to be insufficient. Therefore, the performance and flight characteristics should be validated at extreme temperatures; however, analysis may be permitted if a suitable methodology is demonstrated.

(C) Various FAA/AUTHORITY cold weather programs have verified that rotorcraft can be affected, sometimes significantly, in both the performance and flying qualities areas. Hot temperature conditions although not shown to be as critical should be given consideration.

(D) Additionally, design deficiencies surfaced when the rotorcraft were exposed to temperature extremes and some of these difficulties were severe enough to require the redesign of equipment and/or materials. Therefore, to satisfy § 29.1309(a), the applicant needs to substantiate the total rotorcraft at the extreme temperatures for which certification is requested.

(ii) Procedures.

(A) The FAA/AUTHORITY is responsible for verifying the applicant's predictions of performance and handling characteristics at the temperature extremes for which certification is requested. A limited flight verification, if necessary, could include spot checks of hover and climb performance, IGE controllability, roughness determination, simulated power failure, static stability, height-velocity, V_{NE}/V_D evaluations, ground resonance, etc. In addition, systems should be evaluated to determine satisfactory operations.

(B) Extrapolation of test data should only be allowed if the applicant's predicted or calculated data is verified by actual test but in any case extreme caution should be used for extrapolations that are -10°C below or +20° C above those values tested.

(5) Weight Effects. Test weights should be maintained within +3 percent and -1 percent of the target weight for each data point. Weight may be extrapolated only along an established W/σ line within the allowable altitude extrapolation range.

(6) Engine Power - Turboshaft Engine.

(i) Background.

(A) The purpose of rotorcraft performance flight testing is to obtain accurate quantitative flight test performance data to provide flight manual information.

(B) Flight tests are designed to investigate the overall performance capabilities of the rotorcraft throughout its operating envelope. This testing furnishes information to be included in the flight manual and provides a means of validating the predicted performance of the rotorcraft with a minimum installed specification engine.

(C) The horsepower used to complete the flight manual performance must be based on horsepower values no greater than that available from the minimum uninstalled specification engine after it is corrected for installation losses. A minimum uninstalled specification engine is one that, on a test stand under conditions specified by the engine manufacturer, will produce the certificated horsepower values at specification temperatures and/or speeds. The specification values may be either a rating or limit. Some engine manufacturers certify an engine to a specified horsepower at a particular engine temperature or speed rating with higher allowable limits. The limit is the maximum value the installed engine is allowed in order to develop the specification horsepower. Prior to installation of each engine in a rotorcraft, the performance is measured by the engine manufacturer. This is done by making a static test run in a test cell and referring the results to standard day, sea level conditions. The performance parameters obtained are presented as uninstalled engine characteristics on a test log sheet. This is commonly referred to as a “final run sheet.”
Figure AC 29.45-3 compares a typical engine to one the manufacturer has certified as a minimum uninstalled certified engine.

(D) After engine certification, the engine manufacturer is responsible to ascertain that each engine delivered will produce, as a minimum, the certified horsepower values without exceeding specification operating values; therefore, a “final run sheet” is created for every engine produced. Additionally, if needed, arrangements can usually be made with the engine manufacturer to obtain a torque system calibration for individual engines. This will further optimize the accuracy of the engines used in the flight test program. The engine manufacturer will also provide predicted uninstalled power available for the various power ratings. This information may be derived from an engine computer “card deck” and from charts and tables in the engine detail installation manual. These data also provide engine performance for the range of altitudes and temperatures approved for the engine and include methods for correcting this performance for installation effects. The parameters contained in a typical “card deck” are plotted for one engine rating in figure AC 29.45-4.

(E) Several power losses may be associated with installing an engine in a rotorcraft. Typical losses are air inlet losses, gear losses, air exhaust losses, and powered accessory losses such as electrical generators. Additional flight manual performance considerations are the torque indicating system accuracy and torque needle split. The predicted uninstalled power available engine characteristics cannot be assumed to be the actual power available after the engine is installed in the rotorcraft because this procedure would neglect the installation power losses. It is necessary to know the installation losses in order to determine the flight manual performance. Installation losses are reflected reductions in available horsepower resulting from being installed in a rotorcraft. These losses usually consist of those incurred due to engine inlet and/or exhaust design. The rotorcraft manufacturer usually conducts test to confirm the installed specification. Methods used vary widely between manufacturers, but usually include some combination of ground and flight tests. Figure AC 29.45-5 is a typical example of an installed power available chart for one set of conditions.

(F) This predicted installed power available is, in most cases, lower than obtained on a test stand. This is especially true at lower airspeeds where exhaust reingestion decreases the available horsepower output and changes in airflow routing. The rotorcraft manufacturer may elect to determine the installation losses for different flight conditions to take any airspeed advantages. This is acceptable if, for example, the hover performance is based on the actual horsepower available from a minimum installed specification engine in a hover. Likewise, it is permissible for the rotorcraft manufacturer to determine his climb performance based on the actual horsepower available from a minimum installed specification engine at the published climb airspeed. This will allow the manufacturer to take advantage of, for example, increased inlet efficiency.

(ii) Procedures.

(A) To this point the minimum installed specification engine horsepower output has been predicted and calculated for various flight conditions. It is imperative that the predicted values be verified by actual flight test. The flight test involves obtaining engine performance measurements at various power settings, altitudes, and ambient temperatures. The data should be obtained at the actual flight condition for which the performance is to be presented (i.e., hover, climb, or cruise).

(B) Following an initial application of power, engine temperature and/or RPM can significantly decrease for a period of time as torque is held constant. Said another way, torque will increase if RPM and/or temperature is held constant. This is a characteristic typical of turbine engines due largely to expansion of turbine blades and reduced clearances in the engine. Some engines may show a temperature increase at constant power due to engine or temperature sensing system peculiarities. An engine will usually establish a stabilized relationship of power parameters in approximately 2 or 3 minutes. For this reason, the following procedure should be used when obtaining in-flight engine data.

(1) To determine the applicable value (takeoff, 30-second, and 2 1/2-minute power), the engine is first stabilized at a low power setting. After stabilization, rapidly increase the power demand to takeoff, 30-second and 2 1/2-minute power levels as necessary. Record the engine parameters as soon as the specification torque, temperature, or speed is attained. Care must be taken not to exceed a limit. These readings should be obtained approximately 15 seconds after power is initially applied.

(2) To determine the 30-minute and/or maximum continuous power values, approximately 2 to 3 minutes of stabilization time is generally used, but up to 5 minutes stabilization time is allowed. The reason for the different procedures is when a pilot requires takeoff or 2 1/2-minute power values he is in a critical flight condition and does not have the luxury of waiting for the engine(s) to produce rated power. Stabilization time is allowed for the maximum continuous and 30-minute ratings

because these values are not associated with flight conditions for which power is needed immediately. An engine may be certified to produce a specification horsepower at a particular temperature or engine speed rating with higher maximum limit value approved. Only the rating values should be used to determine the installation losses. The limit values of engine temperature and/or speed are established and certified to allow specification powers to continue to be developed as the engine deteriorates in service.

(C) The in-flight measurements recorded with the engine(s) on the flight test rotorcraft must be corrected downward if the test engine is above minimum specification and corrected upward for a test engine that is below minimum specification. This correction is necessary to verify that a minimum installed specification engine installed on a production rotorcraft is capable of producing the horsepower values used to compute the flight manual performance without exceeding any engine limit. In addition, if the production rotorcraft's power measurement devices have significant (greater than 3 percent) power error, this error must be accounted for in a conservative manner.

(D) On multiengine rotorcraft, the engine location may result in different installation losses between engines. If this condition exists, multiengine performance should be based on a total of the different minimum installed specification horsepower values. One engine inoperative performance must be based on the loss of the engine which has the lowest installation losses. Additionally, the power losses due to such items as accessory bleed air, particle separators, etc., must be accounted for accordingly.

(E) Power available data should be obtained throughout the test program at various ambient conditions. Some engines have devices which restrict the mechanical N_G speed to a constant corrected speed at cold temperatures. Others may limit power to a minimum fuel flow value which would be encountered only at certain ambients. Others may limit by torque limiting devices. Therefore, power available data should be obtained at various ambients to verify that all limiting devices are functioning properly and have not been affected by the installation.

(F) Through use, turbine engine power capabilities decrease with time. This is called engine deterioration. Deterioration is largely a function of the particular engine design, and the manner and the environment in which the engine is operated. There is a need, therefore, to provide a method which can be used in service to periodically determine the level of engine deterioration. A power assurance curve is usually provided to allow the flightcrew to know the power producing capabilities of any engine. A power assurance check is a check of the engine(s) which will determine that the engine(s) can produce the power required to achieve flight manual performance. This check does not have to be done at maximum engine power. Figure AC 29.45-6 is a typical power assurance curve for an installed engine showing minimum acceptable torque which assures that power is available to meet the rotorcraft flight manual performance. Some power assurance curves have maximum allowable N_G limits that

must not be exceeded for a given torque value. An in-flight power assurance check may be used in addition to the pre-takeoff check. The validation of either check must be done by the methodology used to determine the installed minimum specification engine power available. For the in-flight power assurance check there must be full accountability for increased efficiency due to such items as inlet ram recovery, absence of exhaust reingestion, etc. A power assurance check done statically and one conducted in-flight must yield the same torque margin(s). An engine may pass power assurance at low power but still may not be capable of producing the rated horsepower values. This occurs when the curve of measured corrected horsepower and corrected temperature for the engine intersects the minimum uninstalled specification engine curve. If this condition exists, the entire power assurance and power available information may need to be reestablished.

(7) Deteriorated Engine Power - Turboshaft Engine.

(i) Background.

(A) A specific engine model may have been certificated for operation with power which has “normally” deteriorated below specification. This “normal” deterioration refers to a gradual loss in engine performance, possibly caused by compressor erosion, as opposed to a sudden performance loss which may be due to mechanical damage. The application for deteriorated engine power should not be confused with the installed mechanical engine derating which is frequently used to match transmission and engine power capabilities.

(B) The use of deteriorated power is intended to allow continued operations with an engine which is serviceable and structurally sound, although aircraft performance may be depreciated. The useful life of the engine may, therefore, be extended at a dollar savings to the operator.

(C) Although installed performance is the primary topic in this discussion, considerations must be given to other operational characteristics and systems which may be affected by depreciated engine power. These include:

(1) Engine characteristics (§ 29.939). The reduced compressor discharge pressure, P_C, would reduce engine surge margin and possibly affect engine response and engine air-restart capability. These items should be addressed, but flight testing may not be required depending on the individual engine/aircraft installation and fuel scheduling mechanism.

(2) Performance of customer bleed air systems may be degraded slightly. No problem would be anticipated unless certain items within the system depend on a critical P_C for their function.

(3) The maximum attainable gas producers speed, and thus power available under certain ambients, may be affected if P_C pressure is an input to the fuel scheduling mechanism.

(4) Systems for surge protection which schedule on P_C pressure such as bleed valves, flow fences, bleed bands, and variable inlet guide vanes may be influenced. The affect would normally be negligible unless when installed, the installation losses combined with reduced P_C because of deterioration, would cause the bleed device to open and reduce power at any one of the engine ratings.

(ii) Procedures.

(A) The need for flight tests to verify predicted power available with deteriorated engines depends on the scope of testing which occurred during initial certification. If the original rotorcraft certification included flight testing as described in paragraph (6) (engine power-turboshaft engines) herein for validation of power available, the need for a demonstration with deteriorated engines, is greatly diminished and perhaps eliminated.

(B) If flight testing to verify deteriorated engine power available is deemed necessary, the procedure used would be the same as that described in paragraph (6) (engine power-turboshaft engines), except that the data would be corrected downward to a deteriorated engine runline. Efforts should concentrate on obtaining data in areas of the operational envelope where maximum gas producer speed is likely to be attained, or where bleed valves or other devices which schedule on gas producer discharge pressure are likely to function. On many installations maximum gas producer speed will occur cold and high; bleed valves and other devices which schedule on gas producer discharge pressure are most likely to function and reduce power on a hot day at low altitude.

(C) The adjustments to the normal power assurance check procedures for deteriorated engines will be influenced by the preferences of the aircraft manufacturer and by any special stipulations of the engine certification region established as a condition for the engine to remain in service when below specification. Possibly, more stringent and more complicated procedures will be introduced for deteriorated power; for example, an in-flight trend monitoring program with the associated bookkeeping duties may be required. Such an in-flight procedure must be evaluated by flight tests as described in paragraph (6) (engine power-turboshaft engines) herein. Normally, however, the manufacturer would be expected to present a modification, or extension of the power assurance procedure already in place for the specification engine, which could eliminate the need for flight test evaluation.

(D) If a complex power assurance procedure is presented with involved data reduction and trending requirements, consideration should be given to restricting the use of deteriorated power to operators where close control over operations is

exercised and/or the operator has demonstrated his ability to operate safely with deteriorated engines.

AC 29.45A. § 29.45 (Amendment 29-24) PERFORMANCE - GENERAL.

a. Explanation. Amendment 29-24 adds § 29.45(f) to the regulation. This section establishes the requirement for furnishing power assurance information for turbine powered aircraft. This information is to provide the pilot a means of determining, prior to takeoff, that each engine will produce the power necessary to achieve the performance presented in the rotorcraft flight manual (RFM).

b. Procedures. All of the policy material pertaining to this section remains in effect. In addition, the power assurance information included in the RFM should be verified. Although this requirement is normally met with a power assurance curve, other methods of compliance may be proposed.

AC 29.45B. § 29.45 (Amendment 29-24) PERFORMANCE - GENERAL.

a. Explanation. Amendment 29-34 added the requirements for certification of 30-second/2-minute One Engine Inoperative (OEI) power ratings. For rotorcraft approved for the use of 30-second/2-minute OEI, partial power checks currently accomplished with approved power assurance procedures for lower power levels may not be sufficient to guarantee the ability to achieve the 30-second power level.

b. Procedures. Information provided in paragraph AC 29 MG 9 includes guidance material on power assurance procedures to ensure that the OEI power level can be achieved. The guidance material presented in paragraphs AC 29.45 and AC 29.45A continue to apply.

CERTIFICATION BASIS

		FAR 29			CAR 7
Requirements		29-Amdt. 21	29-Amdt. 1	Original	Original
H-V Ref. 29.25 29.87 29.1517 29.1581 29.1583 7.11 7.715 7.741	**CAT A TEST CONDITIONS**	Cat A & B (>9 pax seats): 1. W.A.T. for which t.o. and ldg. are approved. 2. Failure of critical engine.	Cat A: 1. MGW Sea Level 2. Max. IGE wt. Max. alt. capability. 3. Failure of critical engine.	Cat A: 1. MGW Sea Level 2. Max. IGE wt. Max. alt. capability. 3. Failure of critical engine.	Cat. A: 1. MGW Sea Level 2. Max. IGE wt. Max. alt. Capability. 3. Failure of critical engine.
AC 29-2C paras AC 29.45 & AC 29.79	**CAT A RFM**	3. H-V is limitation. 4. Type of ldg. surface.	4. H-V is limitation. 5. Type of ldg. Surface.	4. H-V is limitation. 5. Type of ldg. surface.	4. H-V is limitation. 5. Type of ldg. surface.
	CAT B TEST CONDITIONS	Cat B (</=9 pax seats): 1. MGW Sea Level 2. Max. OGE wt. Max. alt. Capability 3. Complete power failure, or failure of critical engine (w/eng isolation).	Cat B: 1. MGW Sea Level 2. Max. IGE wt. Max. alt. Capability 3. Complete power failure, or failure of critical engine (w/eng isolation).	Cat B: 1. MGW Sea Level 2. Max. IGE wt. Max. alt. Capability 3. Complete power failure, or failure of critical engine (w/eng isolation.)	Cat B: 1. MGW Sea Level 2. Max. IGE wt. Max. alt. Capability 3. Complete power failure, or failure of critical engine (w/eng isolation.)
	CAT B RFM	4. H-V is perf. Info. 5. Type of ldg. surface.	4. H-V is limitation info. 5. Type of ldg. Surface.	4. H-V is limitation info. 5. Type of ldg. surface.	4. H-V is limitation info. 5. Type of ldg. surface.

FIGURE AC 29.45-1. H-V REQUIREMENTS

CERTIFICATION BASIS

		FAR 29			CAR 7
Requirements		29-Amdt. 24	29-Amdt. 3	Original	Original
IGE CONTROL Ref. 29.25 29.1583 7.121 7.743	**CAT A TEST CONDITIONS**	Cat A 1. W.A.T. for which t.o. and ldg. are approved. 2. Critical wt. Critical CG Critical Nr 3. Wind not less than 17 kts.	1. Conditions selected by the applicant. 2. Critical CG Critical Nr 3. Wind not less than 17 kts.	1. Conditions selected by the applicant. 2. Critical CG Critical Nr 3. Wind not less than 20 mph.	1. Conditions selected by the applicant. 2. Critical CG Critical NR 3. Wind not less than 20 mph.
AC 29-2C paras AC 29.45 and AC 29.143	**CAT A RFM**	4. Max. allowable wind is limitation.	4. Max safe wind above max. alt. For which 17 kt. Wind envelope is established is perf. info.	4. Max safe wind above alt. for which 17 kt. wind envelope is established is perf. info.	4. Max. allowable wind above the altitude for which 20 mph wind envelope is est. is perf. info.
	CAT B TEST CONDITIONS	Cat B: 1. W.A.T. for which t.o. and ldg. are approved. 2. Critical wt. Critical CG Critical Nr 3. Wind speed & quad selected by the applicant.			
	CAT B RFM	4. Max. safe wind is perf. info.			

FIGURE AC 29.45-2 IGE CONTROLLABILITY REQUIREMENTS

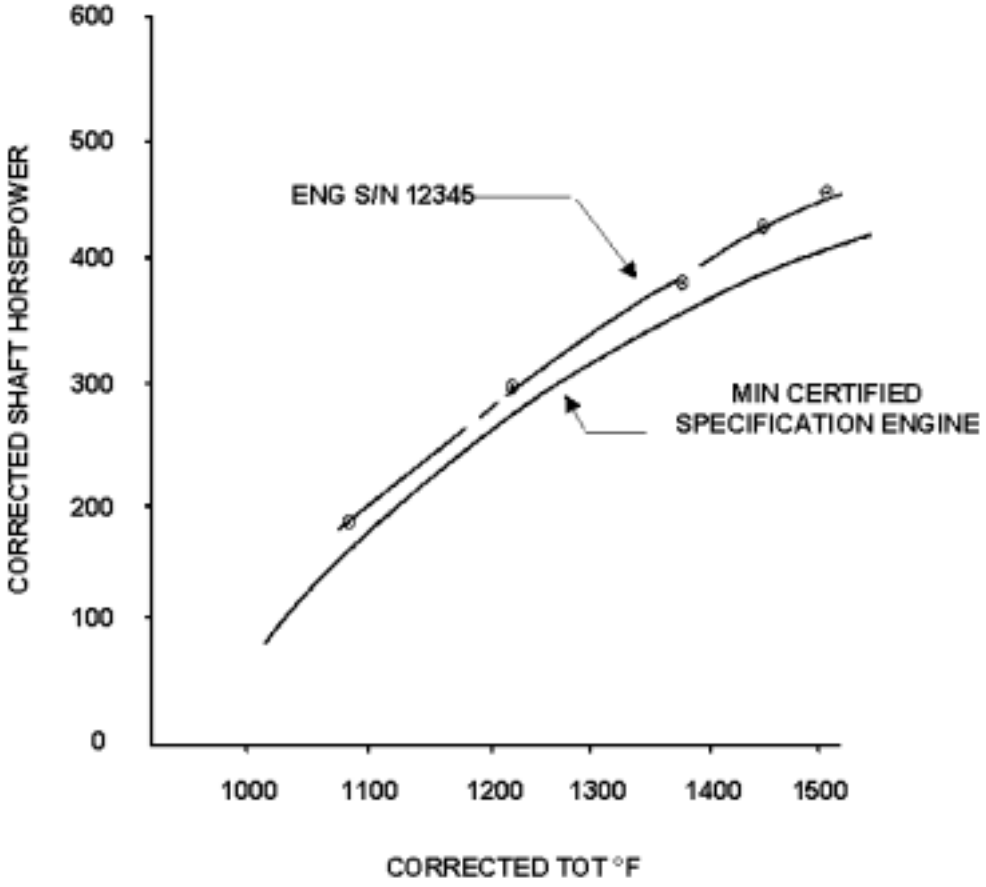

FIGURE AC 29.45-3 SHAFT HORSEPOWER VS TURBINE OUTLET TEMPERATURE - SEA LEVEL STANDARD DAY

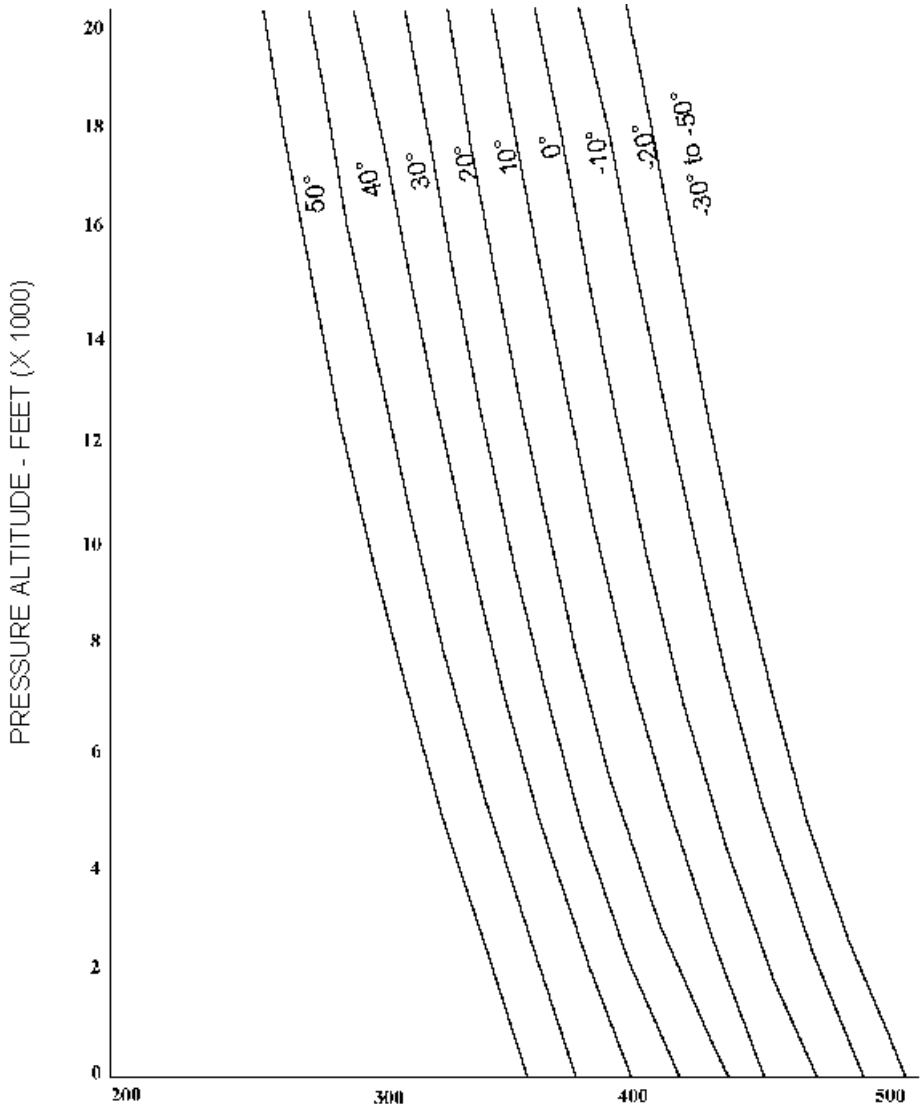

SHAFT HORSEPOWER AVAILABLE

FIGURE AC 29.45-4 UNINSTALLED TAKEOFF POWER AVAILABLE

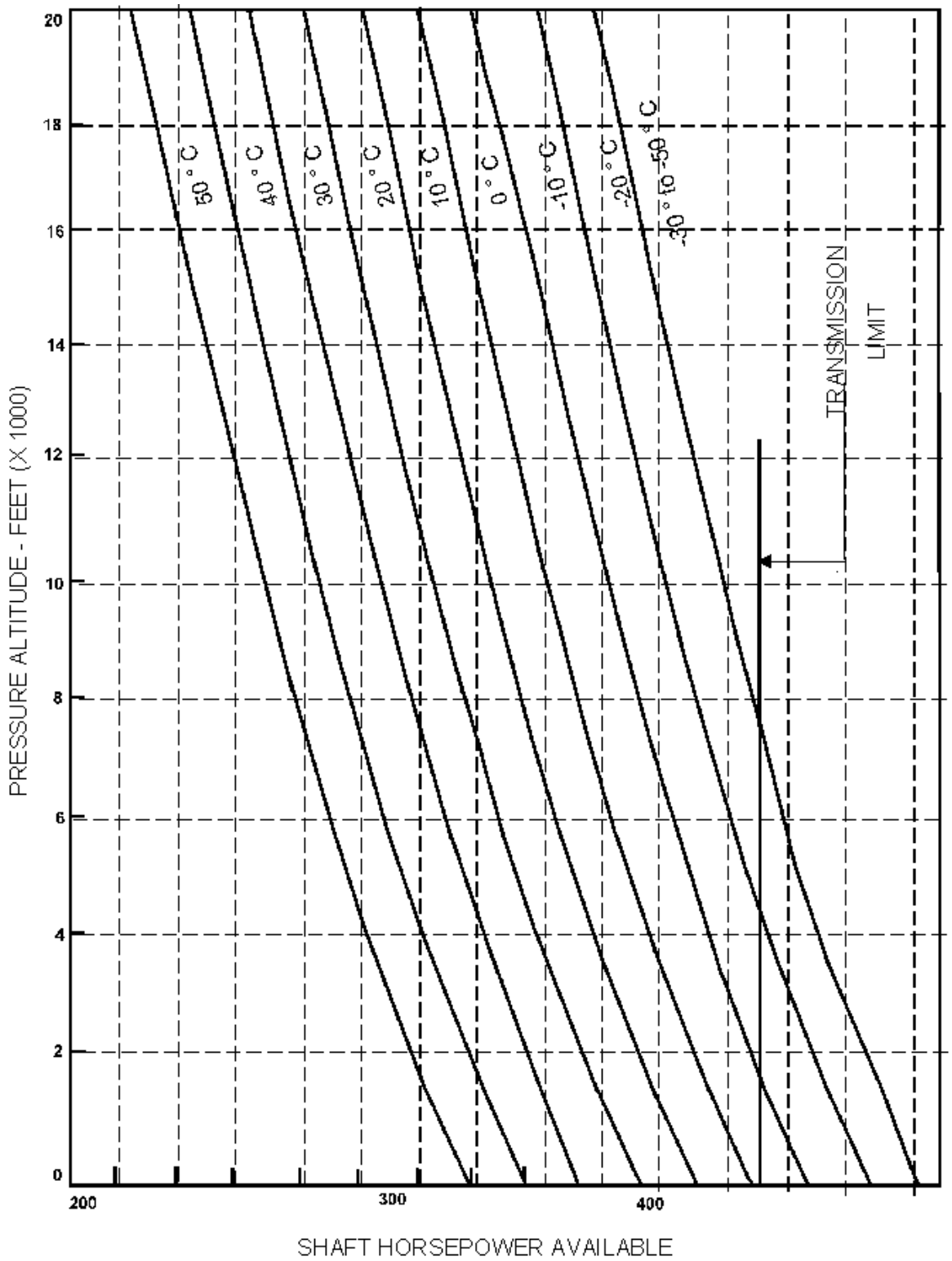

FIGURE AC 29.45-5 INSTALLED TAKEOFF POWER AVAILABLE, ANTI-ICE OFF, 400 RPM

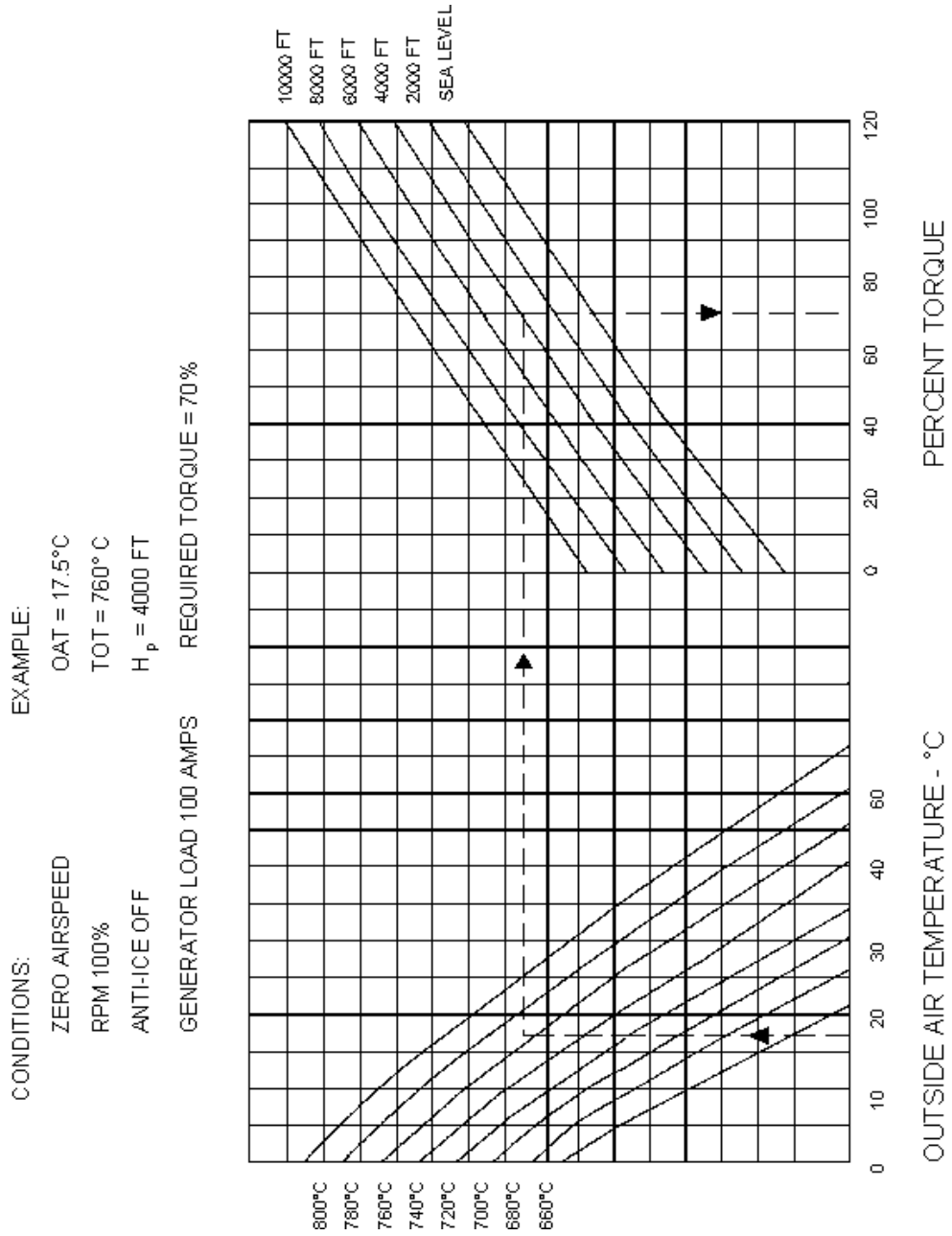

FIGURE 29.45-6 POWER ASSURANCE CHECK CHART

AC 29.49. § 29.49 (Amendment 29-39) PERFORMANCE AT MINIMUM OPERATING SPEED. HOVER PERFORMANCE FOR ROTORCRAFT.

(For performance at minimum operating speed and for hover performance prior to Amendment 39, see § 29.73 and paragraph AC 29.73.)

a. Explanation.

(1) Amendment 29-39 redesignated § 29.73 as § 29.49 to relocate the requirements for rotorcraft hover performance. For the purpose of this manual, the word “hover” applies to a rotorcraft that is airborne at a given altitude over a fixed geographical point regardless of wind. Pure hover is accomplished only in still air.

(2) Under § 29.49, hover performance should be determined at a height consistent with the takeoff procedure for Category A rotorcraft and IGE for Category B rotorcraft. Additionally, OGE hover performance should be determined for both Category A and B rotorcraft. Hover OGE is that condition, where an increase in height above the ground will not require additional power to hover. Hover OGE is the absence of measurable ground effect. It can be less than one rotor diameter at low gross weight increasing significantly at high gross weights. The lowest OGE hover height at gross weight may be approximated by placing the lowest part of the vehicle 1 ½ rotor diameters above the surface.

(3) The objective of hover performance tests is to determine the power required to hover at different gross weights, ambient temperatures, and pressure altitudes. Using nondimensional power coefficients (C_p) and thrust coefficients (C_t) for normalizing and presenting test results, a minimum amount of data are required to cover the rotorcraft’s performance operating envelope.

(4) Hover performance tests must be conducted over a sufficient range of pressure altitudes and weights to cover the approved ranges of those variables for takeoff and landings. Additional data should be acquired during cold ambient temperatures, especially at high altitudes, to account for possible Mach effects.

(5) The minimum hover height for which data should be obtained and subsequently presented in the flight manual should be the same height consistent with the minimum hover height demonstrated during the takeoff tests. Refer to paragraph AC 29.51 for the procedure to determine the minimum allowable hover height.

b. Procedures.

(1) Two methods of acquiring hover performance data are the tethered and free flight techniques. The tethered technique is accomplished by tethering the rotorcraft to the ground using a cable and load cell. The load cell and cable are attached to the ground tie-down and to the rotorcraft cargo hook. The load cell is used to measure the

rotorcraft's pull on the cable. Hover heights are based on skid or wheel height above the ground. During tethered hover tests, the rotorcraft should be at light gross weight. The rotorcraft will be stabilized at a fixed power setting and rotor speed at the appropriate skid or wheel height. Once the required data are obtained, power should be varied from the minimum to the maximum allowed at various rotor RPM. This technique will produce a large C_t/C_p spread. The load cell reading is recorded for each stabilized point. The total thrust the rotor produces is the rotorcraft's gross weight, weight of the cables and load cell plus cable tension. Care must be taken that the cable tension does not exceed the cargo hook limit or load capacity of the tie-down. For some rotorcraft, it may be necessary to ballast the rotorcraft to a heavy weight in order to record high power hover data.

(2) The pilot maintains the rotorcraft in position so that the cable and load cell are perpendicular to the ground. To insure the cable is vertical, two outside observers, one forward of the rotorcraft and one to one side, can be used. Either hand signals or radio can be used to direct the pilot. The observers should be provided with protective equipment. This can also be accomplished by attaching two accelerometers to the load cell which sense movement along the longitudinal and lateral axes. Any displacement of the load cell will be reflected on instrumentation in the cockpit and by reference to this instrumentation, the rotorcraft can be maintained in the correct position. Accurate load cell values may also be obtained by measuring cable angles and, through geometry, determining a corrected load cell value. Increased caution should be utilized as tethered hover heights are decreased because the rotorcraft may become more difficult to control precisely. The tethered hover technique is especially useful for OGE hover performance data because the rotorcraft's internal weight is low and the cable and load cell can be jettisoned in the event of an engine failure or other emergency.

(3) To obtain consistent data, the wind velocity should be 3 knots or less. Large rotorcraft with high downwash velocities may tolerate higher wind velocities. The parameters usually recorded at each stabilized condition are:

(i) Engine torques.

(ii) Rotor speed.

(iii) Ambient temperatures.

(iv) Pressure altitude.

(v) Fuel used (or remaining).

(vi) Load cell reading.

(vii) Generator(s) load.

As a technique, it is recommended the rotorcraft be loaded to a center of gravity near the hook to minimize fuselage angle changes with varying powers. All tethered hover data should be verified by a limited spotcheck using the free flight technique. The free flight technique as contained in paragraph b(4) below will determine if any problems, such as load cell malfunctions have occurred. The free flight hover data must fall within the allowable scatter of the tethered data.

(4) If there are no provisions or equipment to conduct tethered hover tests, the free flight technique is also a valid method. The disadvantage of this technique as the primary source of data acquisition is that it is very time consuming. In addition a certain element of safety is lost OGE in the event of emergency. The rotorcraft must be reballasted to different weights to allow the maximum C_t/C_p spread. When using the free flight technique, either as a primary data source or to substantiate the tethered technique, the same considerations for wind, recorded parameters, etc., as used in the tethered technique apply. Free flight hover tests should be conducted at CG extremes to verify any CG effects. If the rotorcraft has any stability augmentation system which may influence hover performance, it must be accounted for.

(5) It is extremely difficult to determine when a rotorcraft is hovering OGE at high altitudes above ground level since there is no ground reference. In a true hover, the rotorcraft will drift with the wind. Numerous techniques have been tried to allow OGE hover data acquisition at high altitudes, all of which have resulted in much data scatter. Until a method is proposed and found acceptable to the FAA/AUTHORITY, OGE hover data must be obtained at the various altitude sites where IGE hover data is obtained. Hover performance can usually be extrapolated up to a maximum of 4,000 feet.

AC 29.51. <u>§ 29.51 TAKEOFF DATA - GENERAL</u>.

a. <u>Explanation</u>. Section 29.51 details the conditions under which takeoff performance data can be obtained and presented in the FAA/AUTHORITY approved flight manual. The flight manual must also contain the technique(s) to be used to obtain the published flight manual takeoff performance. Technique should not be confused with exceptional pilot skill and/or alertness as mentioned in § 29.51. Rotorcraft are different from one another and due to this, different pilot techniques are sometimes required to achieve the safest and most optimum takeoff performance. The recommended technique that is published in the flight manual and used to achieve the performance must be determined to be one that the operational pilot can duplicate using the minimum amount of type design cockpit instrumentation and the minimum crew.

b. <u>Background</u>.

(1) Certain special takeoff techniques are necessary when a rotorcraft is unable to takeoff vertically because of altitude, weight, power effects, or operational limitations. The recommended technique used to take off under such conditions is to accelerate the rotorcraft in-ground-effect (IGE) to a predetermined airspeed prior to climbout. Takeoff

tests are performed to determine the best repeatable technique(s) for a particular rotorcraft over the range of weight, altitude, and temperature for which certification is requested.

(2) The primary factor which determines the rotorcraft's takeoff performance is the amount of excess power available. Excess power available is the difference between the power required to hover at the reference height above the ground and the takeoff power available from a minimum installed specification engine. Utilizing the total power available to execute a takeoff may not be operationally feasible due to such items as HV constraints. In such situations, hover power required plus some power increment may be the maximum that can be used and the resulting performance determined accordingly.

(3) Landing gear height above the ground should not be greater than that demonstrated satisfactorily for HV, rejected takeoff, and that height for which IGE hover performance data is presented in the RFM, or less than that height below which ground contact may occur when accomplishing takeoff procedures. For rotorcraft fitted with wheels, a running takeoff procedure may be accepted. The hover reference height is established as the minimum landing gear height above the takeoff surface, from which a takeoff can be accomplished consistently in zero wind without contacting the runway. Category B takeoff must be accomplished with power fixed at the power required to hover at the reference height (not greater than the height for which IGE performance data is presented).

c. Procedure. There are different techniques which may be used in order to determine which method is best for a particular rotorcraft. The most commonly accepted method is the hover and level acceleration technique. In this technique, the rotorcraft is stabilized in a hover at the reference height. From the stabilized hover, the rotorcraft is accelerated to the climbout airspeed using the predetermined takeoff power. When the desired climbout airspeed is achieved, the rotorcraft is rotated and the climbout is accomplished at the schedule airspeed(s) and constant rotor RPM. Power adjustments may be accomplished to maintain targeted power except where procedure requires high workload outside cockpit (i.e., that portion of takeoff where horizontal acceleration close to the ground has pilot scan outside the cockpit and adjustment of engine torque or temperature would require an undue increase in workload).

AC 29.51A. § 29.51 (Amendment 29-39) TAKEOFF DATA - GENERAL.

a. Explanation. Amendment 39 added takeoff requirements in new §§ 29.55, 29.60, 29.61 and 29.62.

b. Procedures. The guidance material presented in paragraph AC 29.51 continues to apply.

AC 29.53. § 29.53 TAKEOFF: CATEGORY A.

a. Explanation.

(1) A Category A takeoff typically begins with an acceleration and/or climb from a hover to a critical decision point. The rule requires that the critical decision point (CDP) be defined for the pilot in terms of an indicated altitude and airspeed combination. However, other parameters to define the CDP have been accepted by the FAA/AUTHORITY on an equivalent safety basis. A regulatory project has been established to change the rule permitting other parameters to be used for CDP definition.

(2) The requirement to define CDP as a combination of both airspeed and height above the takeoff surface is based on a minimum required total energy concept. A specific minimum combination of kinetic energy (airspeed) and potential energy (height) must be attained at the CDP to be assured that a continued takeoff can be accomplished following the complete failure of one engine. In § 29.53(b), CDP is required to be "…a combination of height and speed selected by the applicant…" Any other method proposed to define CDP must provide the same level of safety as would be obtained using an airspeed-height combination. When using "time," "height," or "airspeed" only as alternative methods of identifying the CDP, they must be combined with a precisely defined takeoff path and crew procedure in order to provide the required equivalent level of safety. In addition, it must be demonstrated that the pilot technique used during the takeoff sequence is easily repeatable and consistently produces the required energy (i.e., airspeed and altitude combination) when the CDP "time," "height," or "airspeed" is attained. This condition should be verified during the flight test program.

(3) If an engine fails at the CDP or at any point in the takeoff profile prior to attaining CDP, the rotorcraft must be able to land safely within the established rejected takeoff distance. Flight testing to determine the Category A rejected takeoff distance is very similar to height-velocity testing and should be approached with caution. The initial Category A takeoff profiles should be outside of the Category B height-velocity envelope. Previous programs have shown the low speed point immediately after application of power to be particularly critical.

(4) If an engine fails at the CDP or at any subsequent point in the Category A takeoff profile, a continued safe climb-out capability is assured. The continued takeoff for conventional Category A runway profiles is designed to allow acquisition of the takeoff safety speed (V_{TOSS}), at a minimum of 35 feet above the takeoff surface and a positive rate of climb. During the continued takeoff profile, the pilot is assumed to be flying the rotorcraft via the primary flight controls (cyclic stick, collective, and directional pedals). Manipulation of the throttle controls or beep switches may be permitted as long as such manipulation can be accomplished readily by the pilot flying the rotorcraft without removing his hands from the cyclic and collective flight controls. These manipulations of engine controls should not make major adjustments in power, and

should not occur before attaining V_{TOSS}. In no case should this be less than 3 seconds after the critical engine is made inoperative.

(5) Both the rejected takeoff distance and the continued takeoff distance must be determined. Although 29.59(c) suggests a balanced field length requirement, this was not intended. Both rejected and continued takeoff distance should be included in the RFM performance with information stating that the longer distance determines the length of the required takeoff surface. Operations approvals can then determine the required takeoff surface (including stopways and clearways) appropriate for the specific operation.

(6) A typical Category A takeoff profile, assuming an engine failure at the CDP, is shown in figure AC 29.53-1.

b. Procedures.

None.

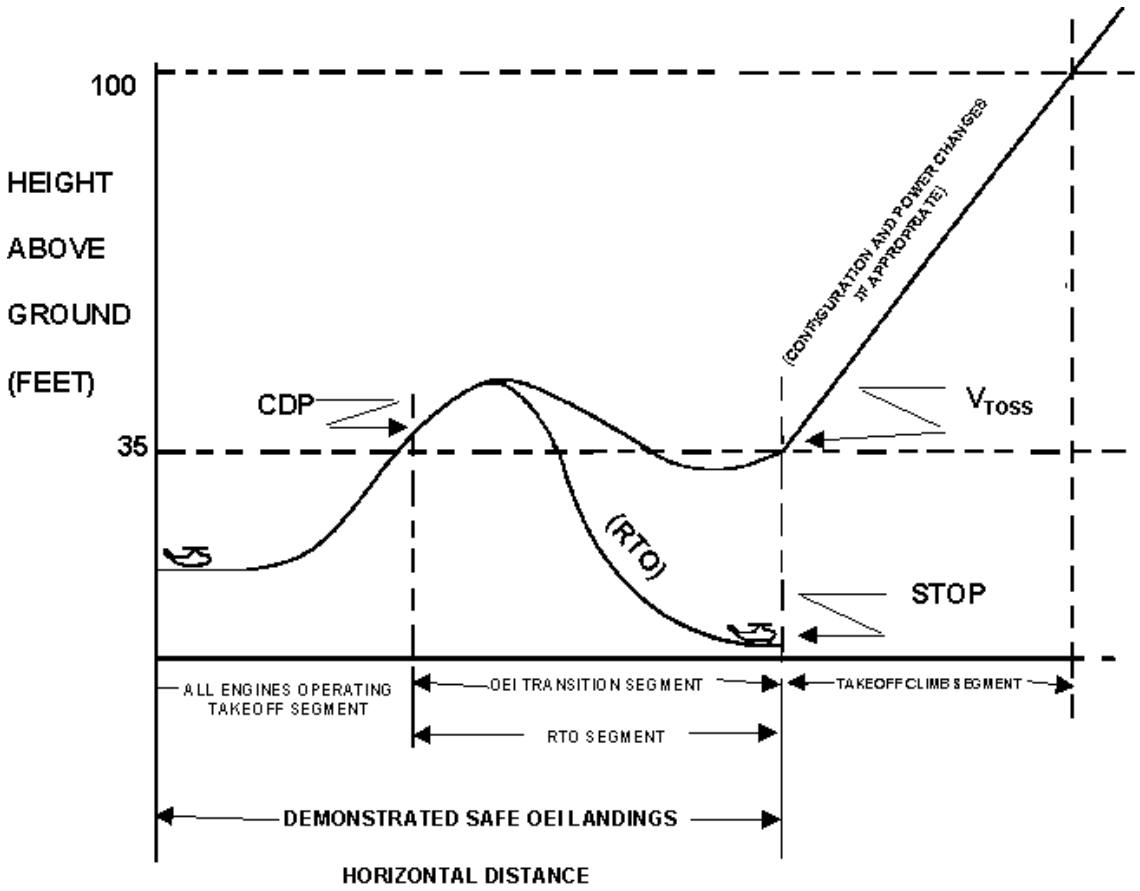

FIGURE AC 29.53-1 TAKEOFF PERFORMANCE CATEGORY A

AC 29.53A. § 29.53 (Amendment 29-39) TAKEOFF: CATEGORY A.

a. Explanation. Amendment 29-39 separated in the text, the Category A takeoff requirement from the definition of a decision point. Category A takeoff performance must be scheduled so that:

(1) If an engine failure is recognized at the Takeoff Decision Point (TDP) or at any point in the takeoff profile prior to attaining TDP, the rotorcraft must be able to land safely within the established rejected takeoff distance. Flight testing to determine the Category A rejected takeoff distance is very similar to height-velocity testing and should be approached with caution. The initial Category A takeoff profiles should be outside of the avoid area of the Category B height-velocity envelope. Previous programs have shown the low speed point immediately after application of power to be particularly critical.

(2) If an engine failure is recognized at the TDP or at any subsequent point in the Category A takeoff profile, a continued safe climb-out capability must be assured. The continued takeoff for conventional Category A runway profiles is designed to allow acquisition of the takeoff safety speed (V_{TOSS}) at a minimum of 35 feet above the takeoff surface and a positive rate of climb.

(3) Both the rejected takeoff distance and the continued takeoff distance should be determined. A balanced field length is not required by the regulation. Both rejected and continued takeoff distance should be included in the RFM performance section. Operations approvals can then determine the required takeoff surface (including stopways and clearways) appropriate for the specific operation.

(4) A typical Category A takeoff profile, assuming an engine failure prior to the TDP, is shown in figure AC 29.53A-1.

b. Procedures. None.

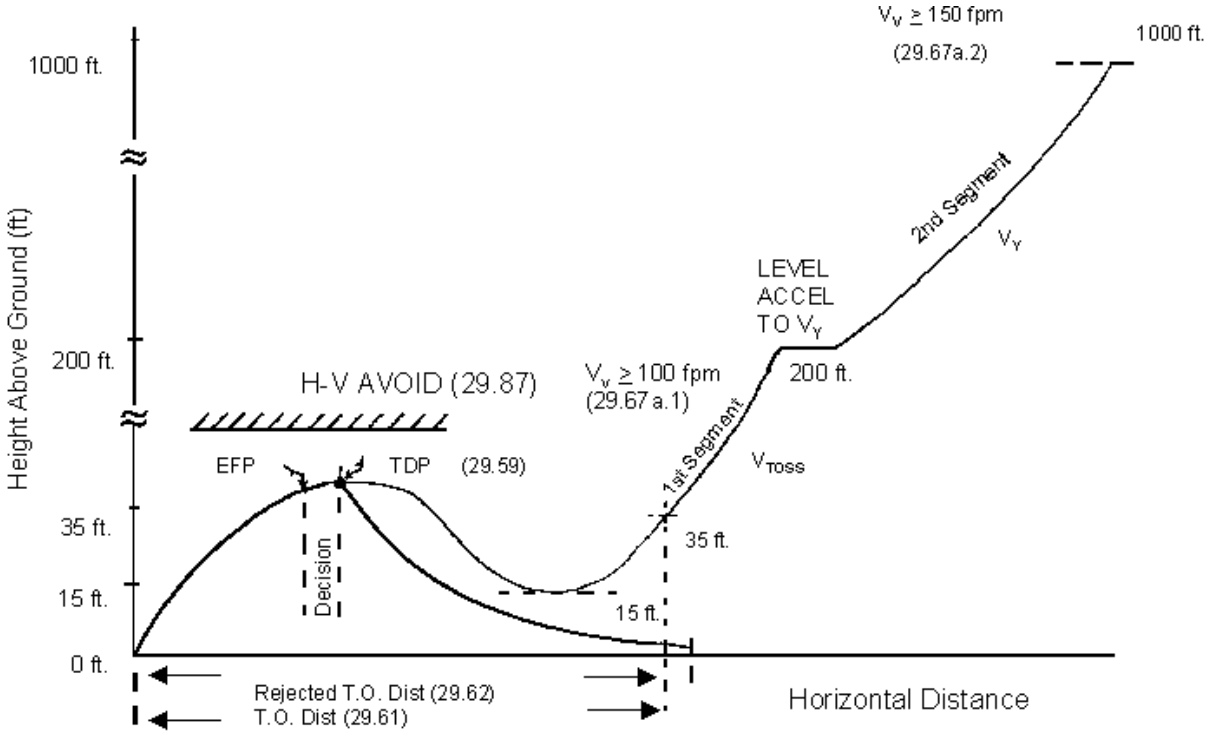

FIGURE AC 29.53A-1 TAKEOFF PERFORMANCE CATEGORY A

AC 29.55. § 29.55 (Amendment 29-39) TAKEOFF DECISION POINT: CATEGORY A.

a. Explanation.

(1) Amendment 29-39 added a new § 29.55 to redefine the TDP (previously called the CDP) and contained in § 29.53; it further removed the requirement to identify the TDP by height and airspeed, since height alone or other factors may be more appropriate. A Category A takeoff typically begins with an acceleration and/or climb from a hover to TDP. The rule requires that the TDP be defined for the pilot in terms of no more than two parameters such as an indicated height and airspeed combination.

(2) The definition of the TDP is based on a minimum required total energy concept. A specific minimum combination of kinetic energy (airspeed) and potential energy (height) should be attained at the TDP to ensure that a continued takeoff can be accomplished following the complete failure of one engine. In § 29.55(b), TDP is required to be defined by no more than two parameters. When using a single parameter such as time, height, or airspeed as a method of identifying the TDP, the identification must be combined with a precisely defined takeoff path and crew procedure to provide the required equivalent level of safety. In addition, it should be demonstrated that the pilot technique used during the takeoff sequence is easily repeatable and consistently produces the required energy (i.e., airspeed and height combination) when the TDP time, height, or airspeed is attained. This condition should be verified during the flight test program.

b. Procedures. None.

AC 29.59. § 29.59 (Amendment 29-24) TAKEOFF PATH: CATEGORY A.

a. Explanation. The Category A concept limits the rotorcraft takeoff weight such that if an engine failure occurs at or before the CDP, a safe landing can be made or if the engine fails at or after the CDP, the takeoff can be continued. The purpose of these tests is to define the CDP, evaluate the necessary pilot techniques, and determine the required takeoff area for either alternative. The condition of equal distances for either stopping or continuing the takeoff is called a “balanced” field length. The combination of altitude and speed at the CDP which produces a balanced field length is not required for certification. This section deals with the Category A takeoff and rejected takeoff profiles. The profiles necessarily involve consideration of an average pilot skill level as well as a sequence in which it is assumed various configuration adjustments are made to the rotorcraft.

(1) Takeoff. The Category A takeoff path begins with an all-engines-operating acceleration segment to the CDP and continues with a one-engine-inoperative acceleration to takeoff safety speed (V_{TOSS}). (See Conventional Takeoff Profile, figure AC 29.53-1, paragraph AC 29.53.) CDP is a “go/no-go” condition which is analogous to V_1 speed in transport airplanes. Prior to CDP the pilot is “stop” oriented,

and when an engine fails in this portion of the takeoff, he will abort because he has not yet achieved sufficient energy to assure continued flight. At the CDP the pilot becomes "go" oriented and when an engine fails at or beyond this point he will continue the takeoff because he no longer has sufficient surface area to abort the takeoff. The takeoff flight path and the CDP must be defined such that a safe landing can be made from any point up to the CDP. This profile may differ significantly from the takeoff flight path developed for Category B weights. The CDP is the last point in the takeoff profile at which a rejected takeoff capability within the scheduled takeoff surface distance is assured. If an engine failure does not occur, the pilot continues the climb and accelerates past the CDP to the recommended climb speed.

(2) Rejected Takeoff. The rejected takeoff profile begins with an all engine acceleration segment to the CDP and ends when the rotorcraft is brought to a complete stop on the designated takeoff surface. The critical engine is made inoperative at the CDP and the landing must be made with the remaining engine(s) operating within approved limits. The rejected takeoff distance is normally measured at a given reference point on the rotorcraft from the start of the takeoff to the same reference point after the rotorcraft has come to a complete stop. This distance should be increased by the rotorcraft length (including main and tail rotor tip paths).

(3) Takeoff Climbout Path.

(i) The "OEI transition segment" is defined as the segment from CDP where the engine becomes inoperative to V_{TOSS}. It is assumed that the maximum approved OEI power is used until the allowable time duration for that power is exhausted. It must be possible for the crew to fly the rotorcraft to V_{TOSS} and attain an altitude of 35 feet and then climb to 100 feet above the takeoff surface by flying the rotorcraft solely by the primary flight controls (including collective). The landing gear may be retracted after attaining a height of 35 feet above the takeoff surface, a speed of V_{TOSS}, and a positive rate of climb. Flight manual procedures may recommend adjustment of auxiliary controls to improve OEI performance. However, compliance with the performance requirements of § 29.67(a)(1) should not be based on use of secondary engine controls such as beepers, etc. Manipulation of the throttle controls or beep switches may be permitted for compliance with the performance requirements of § 29.67(a)(2) as long as such manipulation can be accomplished readily by the pilot flying the rotorcraft without removing his hands from the cyclic and collective flight controls. These manipulations of secondary engine controls should not make major adjustments in the power, and should not occur before attaining V_{TOSS}. There should be a minimum delay of 3 seconds after the critical engine is made inoperative before adjustment of secondary engine controls is allowed during the takeoff path determination. The failure of one engine cannot affect continued safe operation of the remaining engines or require any immediate action by the crew per § 29.903(b). If a 2 ½-minute power rating is used, it should be possible to complete the Category A takeoff profile (assuming an engine failure at CDP), accelerate to V_{TOSS}, attain 35 feet above the surface, and complete landing gear retraction prior to exhausting the 2 ½-minute time limit.

(ii) The takeoff safety speed, V_{TOSS}, is a speed at which 100 FPM rate of climb is assured under conditions defined in § 29.67(a)(1). The takeoff distance is the distance from initial hover to the point at which V_{TOSS} and 35 feet in a climbing posture are attained.

(4) Continued Climbout Path. Continued acceleration and climb capability from 100 feet above the takeoff surface is assured by the 100 FPM V_{TOSS} climb requirement of § 29.67(a)(1) and the 150 FPM requirement of § 29.67(a)(2), normally demonstrated at V_Y . It should be shown that the rotorcraft can be accelerated from V_{TOSS} to V_Y in a continuous maneuver without losing altitude, including any configurative change (landing gear retraction, etc.).

b. Procedures.

(1) Instrumentation. A photo theodolite, grid camera, or other position measuring equipment is required together with a ground station to measure wind, OAT, humidity (if applicable), and a two-way communication system to coordinate activities with the aircraft. A crash recovery team with support of a fire engine is highly desirable. Aircraft instrumentation should record with a time scale: engine parameters (speed, temperature, and power), rotor speed, flight parameters (airspeed, altitude, and normal acceleration as a minimum), flight control positions, power lever position, and landing gear loads. Additionally, a method should be devised to allow correlation of the aircraft instrumentation data with the space position data to accurately determine the length of the various takeoff segments.

(2) Establishing the Critical Decision Point (CDP).

(i) The CDP should be definable with the minimum crew using standard cockpit instrumentation. If a radar altimeter is used, it should be included in the minimum equipment list. If barometric altitude is used to define CDP, the operating conditions at which the altimeter is set should be defined. This is normally done on the ground with the minimum collective pitch. If the wind influences the altimeter reading, the correct relative wind information should be provided. Unless the rotorcraft is capable of hovering with one engine inoperative at the desired Category A weight, the CDP becomes largely a function of the surface area required for takeoff. If takeoff conditions scheduled include considerable surface area (on the order of 2,000 feet), the CDP airspeed may be a high value near V_Y. This will allow a higher takeoff weight and demonstrate compliance with the V_{TOSS} climb requirement of § 29.67(a)(1). In this case, the requirements of § 29.67(a)(2) usually become limiting. If required surface area is a small value, CDP will necessarily be some lower airspeed value to allow for an aborted takeoff on the available surface. Weight may need to be reduced at lower values of CDP airspeed (significantly below V_Y) to allow compliance with the climb requirement of § 29.67(a)(1). Compliance with climb requirements can be substantiated initially by testing at a safe altitude above the ground. When OEI climb conditions are verified for

weight, configuration, pressure altitude, and temperature, the CDP is then evaluated in a rejected takeoff.

(ii) A Category A takeoff procedure for which the CDP is defined as a specific “time,” “height,” or “airspeed” in the takeoff sequence combined with a precise takeoff crew procedure may be approved on the basis of equivalent safety when the following conditions can be satisfied:

(A) The flightcrew takeoff procedure must be shown to be consistently repeatable and not require exceptional piloting skill.

(B) It must be documented that the takeoff procedure will produce the required minimum energy level in terms of height and airspeed for all combinations of gross weight, altitude, and ambient temperature for which takeoff data are scheduled. This may best be accomplished by conducting takeoff procedure abuse tests to show that variations from the established takeoff procedure that could reasonably be expected to occur in service do not result in significant increases in the takeoff distances.

(3) Rejected Takeoff Distance. The rejected takeoff is similar in many respects to the height-velocity (HV) tests described in paragraph AC 29.73. Most of the comments, cautions, and techniques for HV also apply here even though typical flight conditions at CDP are less critical than limiting HV points. As mentioned in paragraph AC 29.79, a minimum 5-knot clearance from any HV limiting condition should be provided throughout the takeoff flight path (see figure AC 29.63-1), and tests should be conducted simulating an unplanned engine cut. The HV diagram appropriate in the Category A test weights may be much less restrictive than that determined for Category B conditions. Normally, a minimum 1-second delay is applied after engine failure before pilot collective control corrections are allowed. However, if pilot cues are strong enough to make engine failure unmistakable, normal pilot reaction time may be utilized following engine failure. As in all engine failure testing, the pilot should not anticipate the failure by changing flight control positions or aircraft attitude. Average pilot techniques should be used. The two primary objectives of rejected takeoff testing are an assured capability to safely return to the takeoff surface when an engine fails at any point prior to CDP and the determination of the rejected takeoff distance that is needed when an engine fails at the CDP. It is important that the surface conditions be defined. For the rejected takeoff distance tests, a minimum of five satisfactory runs should be flown by the FAA/AUTHORITY pilot. The rejected takeoff distances from company and FAA/AUTHORITY runs may be averaged. The rejected takeoff distance tests will be used together with the OEI continued takeoff profiles to establish the required surface area for Category A operations.

(4) Continued Takeoff Distance.

(i) Continued takeoff profiles should be flown to determine the continued takeoff distance. This distance is measured from the point of takeoff initiation to the

point in the takeoff profile where the following three conditions have all been attained after a failure of the critical engine at CDP: an airspeed equal to or greater than V_{TOSS}, a positive rate of climb, and a height of at least 35 feet above the takeoff surface. The rotorcraft should not contact the ground at any point after engine failure. If the rotorcraft descends below 35 feet above the takeoff surface while accelerating to V_{TOSS}, the takeoff distance is extended to the point that 35 feet is reattained with a positive rate of climb.

(ii) If the CDP is significantly above 35 feet so that the rotorcraft does not descend below 35 feet during acceleration to V_{TOSS}, the takeoff distance then becomes the distance to the point in the takeoff profile at which both V_{TOSS} and a positive rate-of-climb are attained after failure of the critical engine at CDP. For most applications, the rotorcraft should not be allowed to descend more than one-half the CDP height above the takeoff surface while accelerating to V_{TOSS}. In addition, the rotorcraft should not be allowed to descend below the height above the takeoff surface at which a landing flare would normally be initiated. For example, if a rotorcraft has a CDP of 20 feet but when landing would normally initiate the landing flare at 15 feet, the takeoff profile should not be allowed to descend to 10 feet but should remain above 15 feet in establishing the takeoff distances.

(iii) In establishing the continued takeoff distance, the applicable pilot recognition delay time should be applied following the engine failure at CDP, and the takeoff profile should be established with the pilot using primary flight controls only to control the rotorcraft. The pilot engine failure recognition time delay before adjustment of the collective pitch control should be a minimum of 1 second unless it can be demonstrated that the pilot will have unmistakable engine failure cues sooner than 1 second.

(iv) Engine failure testing should be initially conducted at a safe distance above the ground to assess the continued takeoff profile before conducting the actual profiles for credit. This procedure will serve to validate predicted performance and may prevent an unexpected return to the surface during continued takeoff tests. A minimum of five acceptable runs should be flown by the FAA/AUTHORITY pilot, and these should be averaged with five acceptable runs flown by the manufacturer's pilot.

(5) Abuse Testing. Takeoff procedure abuse tests should be conducted to show that reasonably expected variations in service from the established takeoff procedures do not result in a significant increase in the established takeoff distances. Variations should include such considerations as under or over rotation during the takeoff initiation, under or over application of acceleration power, and missed CDP target parameters (e.g., time, height, or airspeed).

(6) Continued Climbout Path. The climb performance requirements of § 29.67(a)(1) should be met at the end of the continued takeoff distance segment. Beginning at this point, the landing gear may be retracted, and secondary engine controls may be manipulated to adjust power. Any manipulation of secondary engine

controls should be accomplished readily by the pilot flying the rotorcraft without removing his hands from the cyclic and collective flight controls. The climb should be continued at V_{TOSS} until approximately 100 feet above the takeoff surface. It should be demonstrated that the rotorcraft including any configuration changes can be accelerated from V_{TOSS} to V_Y in a continuous maneuver without losing altitude. The airspeed and rotorcraft configuration (landing gear position, rotor RPM engine power, etc.) used to show compliance with the climb requirements of § 29.67(a)(2) should be attained at or prior to reaching 1,000 feet above the takeoff surface.

(7) Power. Power should be limited to minimum specification values on the operating engine(s). This may be accomplished by adjustment of the engine topping to minimum specification values including consideration of temperature effects on engine power. Turbine engine power does not vary directly with density altitude (H_D). At a given H_D, turbine engine power available varies with ambient temperature. Turbine engines typically produce less horsepower as ambient temperature is increased (pressure altitude decreases) at a given density altitude, although some engines produce less horsepower at extremely cold temperatures. In either event, if one test sequence is to be utilized for a given H_D, it would be appropriate to restrict test power to the lowest value attainable from a minimum specification engine through the approved ambient temperature range at the density altitude of the test. To attain maximum weights for varying ambient conditions, the applicant may utilize a parametric mapping of power available, pressure altitude, and temperature effects. For this case, engine topping may be adjusted throughout a range appropriate to the test H_D.

(8) Aircraft Loading. Both forward and aft CG extremes should be spot checked to determine the critical loading for takeoff distances. Forward center of gravity is usually critical for continued takeoff distance tests while aft CG may be critical for the rejected takeoff because of over-the-nose visibility. A minimum of two weights should be flown at each altitude if the manufacturer elects to schedule field length variation as a function of gross weight. One weight should be the maximum weight for prevailing conditions and the other weight(s) should be low enough to attain a sufficient spread to verify weight accountability.

(9) Extrapolation. Weight cannot be extrapolated above test weight for the same reasons discussed in paragraph AC 29.79. See paragraph AC 29.45 regarding altitude extrapolation of test results.

(10) Ambient Conditions. Appropriate test limits for ambient conditions such as wind and temperature are contained in paragraph AC 29.45. Test data must be corrected for existing wind conditions during takeoff distance testing. Credit for headwind conditions may be given during flight manual data expansion. Refer to paragraph AC 29.45(b)(1) under “Winds for Testing” for allowable wind credit. Care should be applied in considering headwind credit for vertical operations as previous experience has resulted in difficulty collecting meaningful, repeatable data.

(11) Vertical Takeoffs.

(i) General. Guidelines for rotorcraft certification using vertical takeoff techniques were developed and utilized for civil certification programs many years ago. As experience has been gained, certain policy decisions have modified these guidelines. The following guidelines incorporate all available policy information as of January 1, 1981. The reader should be familiar with the preceding discussion regarding conventional Category A takeoff profiles because duplicate information is not repeated here.

(ii) Takeoff Profile. A typical vertical takeoff profile for a ground level heliport is shown in figure AC 29.59-1. The maneuver begins with the addition of sufficient power to initiate a climb to the CDP. It must be possible to make a safe landing without exceptional pilot skill if an engine fails at any point up to the CDP. At the CDP, the pilot becomes “go” oriented and continues the takeoff if an engine fails. A typical profile for pinnacle takeoff conditions is shown in figure AC 29.59-2. Considerations are similar to those of the ground level heliport in figure AC 29.59-1; however, the OEI pinnacle profile allows descent below the takeoff surface, specifies minimum edge clearance criteria, and allows relaxed requirements for final segment climb. Thus far, descent profiles up to 50 feet below the takeoff surface have been allowed; however, there is no reason why greater values could not be determined during engineering flight tests for certification. Use of such a profile, of course, would be dependent on obtaining an operational approval.

(iii) Critical Decision Point (CDP). For vertical takeoffs, the climb to CDP is nearly vertical, and CDP is typically defined primarily by height. Sufficient testing must be conducted to define a band of CDP conditions (heights) which will be consistent with anticipated variations in pilot technique and the minimum amount of equipment to be installed on the production aircraft. Rejected takeoffs are most critical from high CDPs, and continued OEI takeoffs are most critical from low heights. Tests at the extremes of this band are intended to verify that the anticipated CDP band is safe and repeatable in service for reasonable variations in pilot technique. These extreme points should not be used for distance determination when averaging takeoff performance data.

(iv) Conduct of the Test. Vertical takeoff profiles must be flown from a pad simulating operational conditions because the sight picture may be critical to successful OEI operations, particularly for elevated heliports. At all points on the vertical takeoff flight path up to the CDP, the pilot, with reasonable head movement, shall be able to keep sufficient portions of two heliport boundaries (front and one side) or equivalent markings in view to achieve a safe landing in case of engine failure. Normally, a minimum 1-second delay is applied after engine failure before pilot collective control corrections are allowed. However, if pilot cues are strong enough to make engine failure unmistakable, normal pilot reaction time may be utilized following engine failure.

(A) Establish the rejected takeoff distance as the horizontal distance from the rearmost point of the rotorcraft at the initiation of takeoff to the foremost point after the rotorcraft comes to a stop on the takeoff surface (including rotor tip path), assuming an engine failure in the vertical climb at the CDP; or

(B) Establish the continued takeoff distance as the horizontal distance from lift-off to the point at which, following engine failure at CDP, the rotorcraft achieves 35 feet above the takeoff surface and V_{TOSS} in a climbing posture. The continued takeoff profile from elevated heliports must clear the heliport obstructions by at least 15 feet vertically and 35 feet horizontally.

(v) Climb Requirements.

(A) The OEI takeoff profile should include a climb at V_{TOSS} to 200 feet above the takeoff surface prior to accelerating to a higher speed.

(B) For elevated heliports, the climb requirement of § 29.67(a)(2) may be met at 200 feet above the takeoff surface or 1,000 feet above the surrounding terrain, whichever is higher.

(vi) Extrapolation. Basic guidelines for extrapolation are contained in paragraph AC 29.45. If, however, vertical takeoff weights are based upon allowable weights for hovering out-of-ground effect (OGE) with one engine inoperative, all vertical takeoff performance aspects may be extrapolated to the highest altitude requested for takeoff and landing.

(12) Night Operations.

(i) A minimum of three normal takeoffs (and landings) should be conducted to assure that aircraft lighting (internal and external) is adequate to allow normal Category A operations at night.

(ii) Engine failures should be simulated from points along the recommended takeoff profile. Night OEI rejected takeoffs and continued takeoffs from the CDP should be conducted to assure adequate night field of view and realization of Category A field lengths.

(iii) If special airfield markings are used as a reference or to define the CDP, the aircraft external lighting should be evaluated to assure that these airfield markings are adequately visible for night operations.

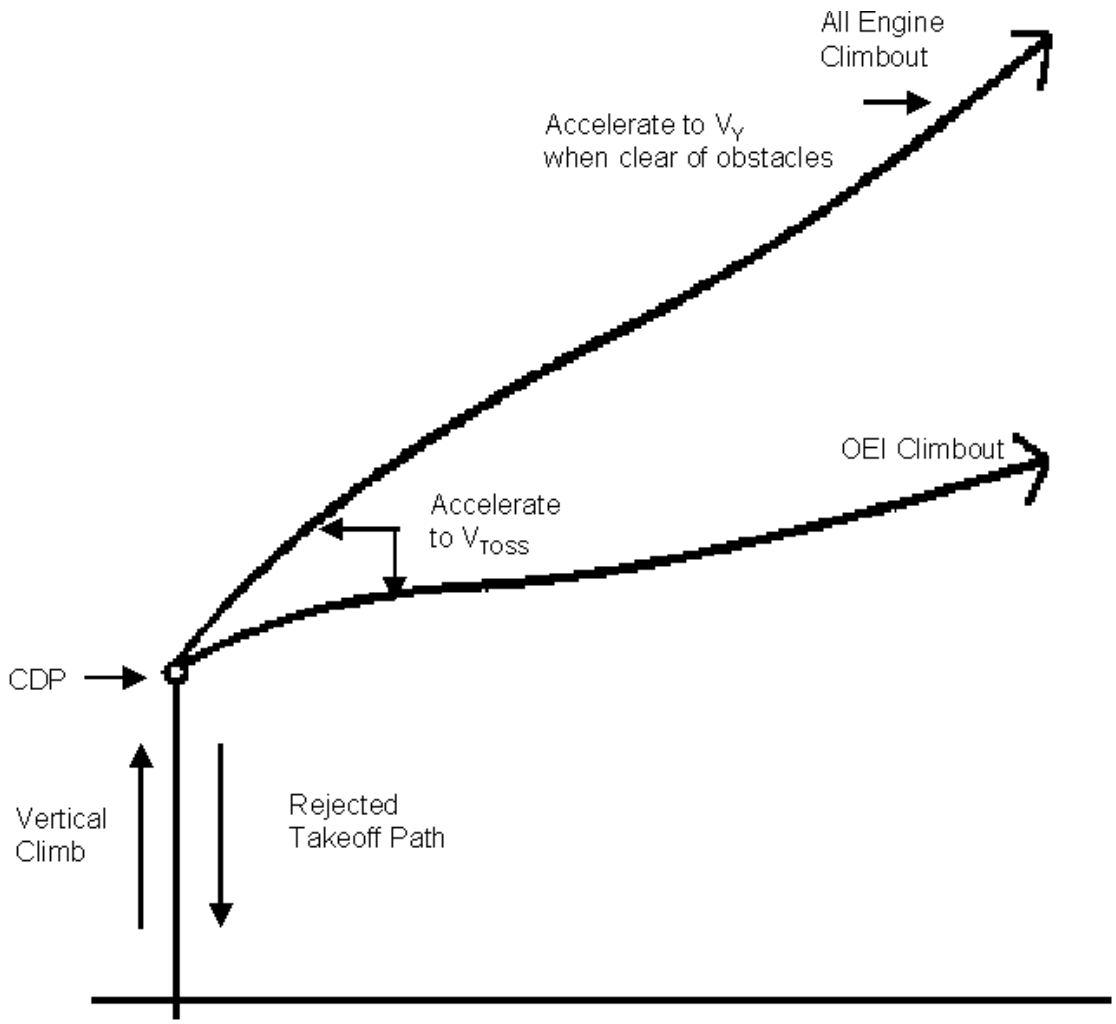

FIGURE AC 29.59-1 CATEGORY A VERTICAL TAKEOFF PROFILE
GROUND LEVEL HELIPORT

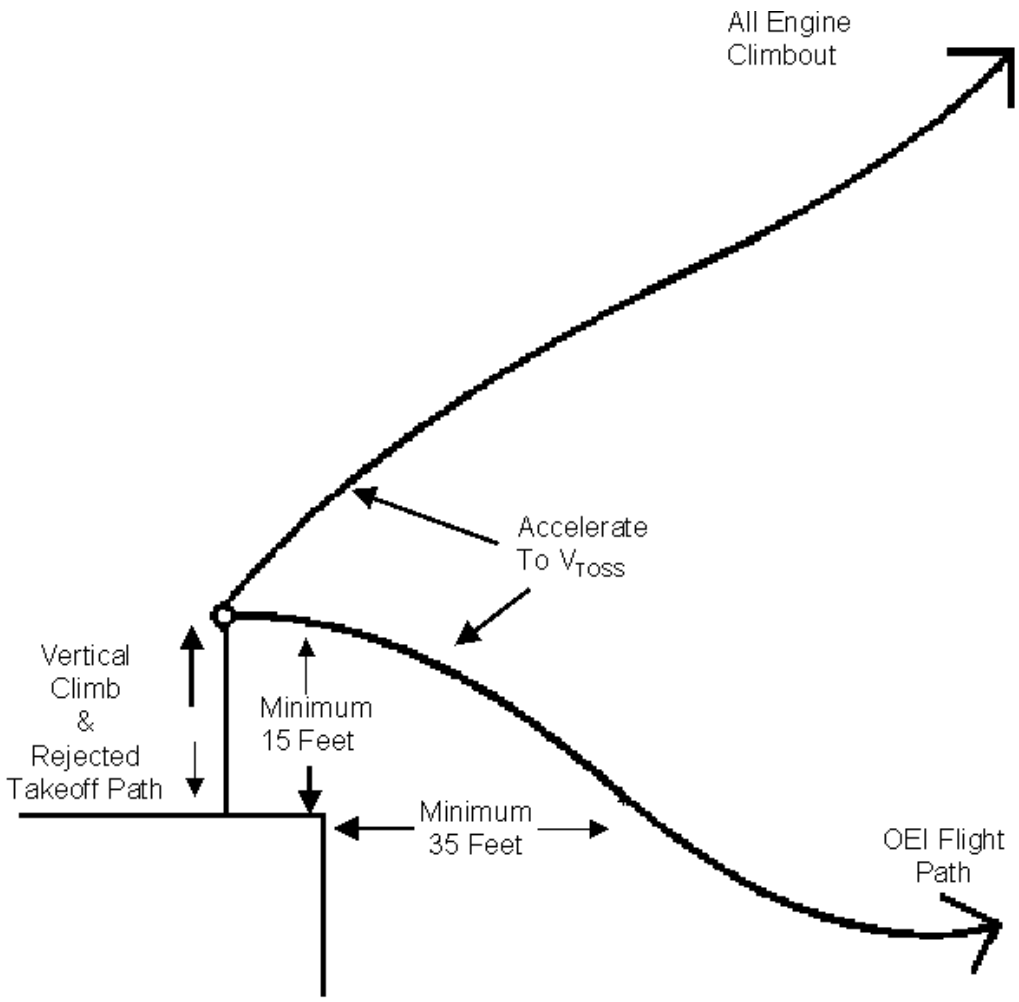

FIGURE AC 29.59-2 CATEGORY A VERTICAL TAKEOFF PROFILE PINNACLE

AC 29.59A (AC's 29.60, 29.61, & 29.62) §§ 29.59 (29.60, 29.61 and 29.62) (Amendment 29-39) TAKEOFF PATH, DISTANCE AND REJECTED TAKEOFF; GROUND LEVEL AND ELEVATED HELIPORT: CATEGORY A

(For § 29.59 prior to Amendment 39, see paragraph AC 29.59.)

a. Explanation. Amendment 29-39 moved the rejected takeoff requirements from § 29.55 to a new § 29.62 and clearly defined the takeoff path. It also added new §§ 29.60 and 29.61 to introduce the requirements for elevated heliport takeoff path, Category A and to more clearly define the parameters to be used in determining takeoff distance, respectively.

(1) Takeoff Decision Point. The Category A concept limits the rotorcraft takeoff weight such that if an engine failure is recognized at or before the TDP, a safe landing can be made or if an engine failure is recognized at or after the TDP, the takeoff can be continued. The purpose of these tests is to define the TDP, evaluate the necessary pilot techniques, and determine the required takeoff area for either alternative. The condition of equal distances for either stopping or continuing the takeoff is called a “balanced” field length. The combination of altitude and speed at the TDP which produces a balanced field length is not required for certification. This section deals with the Category A takeoff and rejected takeoff profiles. The profiles necessarily involve consideration of an average pilot skill level as well as a sequence in which it is assumed various configuration adjustments are made to the rotorcraft.

(2) Takeoff. The Category A takeoff path begins with an all-engines-operating acceleration segment to the engine failure point and continues with a one-engine-inoperative acceleration through the TDP to the takeoff safety speed (V_{TOSS}). The engine failure point (EFP) and TDP are separated by pilot recognition time. (See Conventional Takeoff Profile, figure AC 29.53A-1, paragraph AC 29.53A of this advisory circular.) TDP is a “go/no-go condition which is analogous to V1 speed in transport airplanes. Prior to TDP the pilot is “stop” oriented, and when an engine failure is recognized in this portion of the takeoff, the pilot will abort because the rotorcraft has not yet achieved sufficient energy to assure continued flight. At the TDP the pilot becomes “go” oriented and when an engine failure is recognized at or beyond this point, the pilot will continue the takeoff because sufficient surface area no longer remains for an aborted takeoff. The takeoff flight path and the TDP should be defined such that a safe landing can be made from any point up to the TDP. This profile may differ significantly from the takeoff flight path developed for Category B weights. The TDP is the last point in the takeoff profile at which a rejected takeoff capability within the scheduled takeoff surface distance is assured. If an engine failure does not occur, the pilot continues the climb and accelerates past the TDP to the recommended climb speed.

(3) Rejected Takeoff. The rejected takeoff profile begins with an all engine acceleration segment to the EFP and ends when the rotorcraft is brought to a complete stop on the designated takeoff surface. The critical engine is made inoperative prior to

the TDP, and the landing should be made with the remaining engine(s) operating within approved limits. The rejected takeoff distance is normally measured at a given reference point on the rotorcraft from the start of the takeoff to the same reference point after the rotorcraft has come to a complete stop. This distance should be increased by the rotorcraft length (including main and tail rotor tip paths).

(4) Takeoff Path.

(i) The transition to OEI flight takes place between the engine failure point and the point at which V_{TOSS} is achieved. It is assumed that the maximum approved OEI power is used until the allowable time duration for that power is exhausted. It should be possible for the crew to fly the rotorcraft to V_{TOSS} and attain an altitude of 35 feet and positive rate of climb and then climb to 200 feet above the takeoff surface or the lowest point in the takeoff path by flying the rotorcraft solely by the primary flight controls (including collective). At no time during the takeoff shall the rotorcraft descend below 15 feet above the takeoff surface when the TDP is above 15 feet. The landing gear may be retracted after attaining a speed of V_{TOSS}, and a positive rate of climb. Flight manual procedures may recommend adjustment of auxiliary controls to improve OEI performance, but compliance with the performance requirements of § 29.67(a)(1) may not be based on use of secondary engine controls such as RPM beep switches. During the continued takeoff profile, the pilot is assumed to be flying the rotorcraft via the primary flight controls (cyclic stick, collective, and directional pedals). Manipulation of the throttle controls or beep switches may be permitted as long as such manipulation can be accomplished readily by the pilot flying the rotorcraft without removing his hands from the cyclic and collective flight controls. These manipulations of engine controls should not make major adjustments in power and should not occur before attaining V_{TOSS}. In no case should this be less than 3 seconds after the critical engine is made inoperative. The failure of one engine cannot affect continued safe operation of the remaining engines or require any immediate action by the crew per § 29.903(b). If a 30-second/2-minute or a 2 ½-minute power rating is used, it should be possible to complete the Category A takeoff profile (assuming recognition of an engine failure at or prior to the TDP), accelerate to V_{TOSS}, attain 35 feet above the surface, stabilize in a climb of at least 100 feet per minute, and complete landing gear retraction prior to exhausting the 2 ½-minute time limit.

(ii) The takeoff safety speed, V_{TOSS}, is a speed at which 100 FPM rate of climb is assured under conditions defined in § 29.67(a)(1). The takeoff distance is the distance from the start of the takeoff to the point at which V_{TOSS}, 35 feet above the takeoff surface, and a positive rate of climb are attained.

(5) Continued Climbout Path. Continued acceleration and climb capability are assured by the 100 FPM V_{TOSS} climb requirement of § 29.67(a)(1) and the 150 FPM requirement of § 29.67(a)(2), normally demonstrated at V_y. It should be shown that the rotorcraft can be accelerated from V_{TOSS} to V_Y in a continuous maneuver without losing altitude, including any configurative change (landing gear retraction, etc.). The distance

required to accelerate from V_{TOSS} to V_Y must be considered in determination of the climb and gradients required by § 29.1587(a)(6)(i) and (a)(6)(ii).

b. Procedures.

(1) Instrumentation. A photo theodolite, grid camera, GPS, or other position measuring equipment is normally required together with a ground station to measure wind, OAT, humidity (if applicable), and a two-way communication system to coordinate activities with the aircraft. A crash recovery team with support of a fire engine is highly desirable. Aircraft instrumentation should record with a time scale: engine parameters (speed, temperature, and power), rotor speed, flight parameters (airspeed, altitude, and normal acceleration as a minimum), flight control positions, power lever position, and landing gear loads. Additionally, a method should be devised to allow correlation of the aircraft instrumentation data with the space position data to accurately determine the length of the various takeoff segments.

(2) Establishing the Takeoff Decision Point (TDP).

(i) The TDP should be definable with the minimum crew using standard cockpit instrumentation. If a radar altimeter is used, it should be included in the minimum equipment list. If barometric altitude is used to define TDP, the operating conditions at which the altimeter is set should be defined. This is normally done on the ground with the minimum collective pitch. If the wind influences the altimeter reading, the correct relative wind information should be provided. Unless the rotorcraft is capable of hovering with one engine inoperative at the desired Category A weight, the TDP becomes largely a function of the surface area required for takeoff. If takeoff conditions scheduled include considerable surface area (on the order of 2,000 feet), the TDP airspeed may be a high value near V_Y. This will allow a higher takeoff weight and demonstrate compliance with the V_{TOSS} climb requirement of § 29.67(a)(1). In this case, the requirements of § 29.67(a)(2) usually become limiting. If required surface area is a small value, TDP will necessarily be some lower airspeed value to allow for an aborted takeoff on the available surface. Weight may need to be reduced at lower values of TDP airspeed (significantly below V_Y) to allow compliance with the climb requirement of § 29.67(a)(1). Compliance with climb requirements can be substantiated initially by testing at a safe altitude above the ground. When OEI climb conditions are verified for weight, configuration, pressure altitude, and temperature, the TDP is then evaluated in a rejected takeoff.

(ii) A Category A takeoff procedure should satisfy the following conditions:

(A) The flightcrew takeoff procedure should be shown to be consistently repeatable and not require exceptional piloting skill.

(B) It should be documented that the takeoff procedure will produce the required minimum energy level in terms of height and airspeed for all combinations of

gross weight, altitude, and ambient temperature for which takeoff data are scheduled. This may best be accomplished by conducting takeoff procedure abuse tests to show that variations from the established takeoff procedure that could reasonably be expected to occur in service do not result in significant increases in the takeoff distances.

(3) Rejected Takeoff Distance. The rejected takeoff is similar in many respects to the height-velocity (HV) tests described in paragraph AC 29.73. Most of the comments, cautions, and techniques for HV also apply here even though typical flight conditions at TDP are less critical than limiting HV points. As mentioned in paragraph AC 29.79, a minimum 5-knot clearance from any HV limiting condition should be provided throughout the takeoff flight path (see figure AC 29.63-1), and tests should be conducted simulating an unplanned engine cut. The HV diagram appropriate to the Category A test weights may be much less restrictive than that determined for Category B conditions. Normally, a minimum 1-second delay (or pilot reaction time, whichever is greater) is applied after engine failure recognition, before pilot collective control corrections are allowed. If the rotorcraft incorporates an engine failure warning device, engine failure recognition should not be less than the time required for the engine to spool down and activate the device. As in all engine failure testing, the pilot should not anticipate the failure by changing flight control positions or aircraft attitude. Average pilot techniques should be used. The two primary objectives of rejected takeoff testing are an assured capability to safely return to the takeoff surface when an engine failure is recognized at any point prior to TDP and the determination of the rejected takeoff distance required. It is important that the surface conditions be defined. The rejected takeoff distance tests will be used together with the OEI continued takeoff profiles to establish the required surface area for Category A operations.

(4) Takeoff Distance.

(i) Continued takeoff profiles should be flown to determine the continued takeoff distance. This distance is measured from the point of takeoff initiation to the point in the takeoff profile where the following three conditions have all been attained after a failure of the critical engine prior to TDP: an airspeed equal to or greater than V_{TOSS}, a positive rate of climb, and a height of at least 35 feet above the takeoff surface. If the rotorcraft descends below 35 feet above the takeoff surface while accelerating to V_{TOSS}, the takeoff distance is extended to the point that 35 feet is reattained with a positive rate of climb.

(ii) If the TDP is significantly above 35 feet so that the rotorcraft does not descend below 35 feet during acceleration to V_{TOSS}, the takeoff distance then becomes the distance to the point in the takeoff profile at which both V_{TOSS} and a positive rate of climb are attained after failure of the critical engine prior to the TDP. For all applications, rotorcraft should not be allowed to descend below 15 feet above the takeoff surface while accelerating to V_{TOSS} when TDP is above 15 feet. When TDP is below 15 feet, the aircraft should be able to accelerate in level flight or climb. Fifteen feet should be considered the absolute minimum clearance allowed with greater

clearances required for some rotorcraft dependent on rotorcraft geometry and performance characteristics. In addition, the rotorcraft should not be allowed to descend below the height above the takeoff surface at which a landing flare would normally be initiated. For example, a medium size twin-engined rotorcraft with a TDP of 100 feet or greater, using 20° nose down, would be expected to clear the ground by 25 feet whereas a large multiengined rotorcraft, using similar attitudes and TDP's, would be expected to clear by 35 feet. For elevated heliports the rotorcraft may descend below the landing surface, but all parts of the rotorcraft must clear the heliport and all other obstacles by not less than 15 feet. These minimum heights would need to be demonstrated with variations in piloting techniques and with pilot recognition and reaction times for engine failures occurring before and after TDP.

(iii) In establishing the continued takeoff distance, the applicable pilot recognition delay time should be applied following the engine failure prior to the TDP, and the takeoff profile should be established with the pilot using primary flight controls only to control the rotorcraft. The pilot engine failure recognition time delay before adjustment of the collective pitch control should be a minimum of 1 second.

(iv) Engine failure testing should be initially conducted at a safe distance above the ground to assess the continued takeoff profile before conducting the actual profiles for credit. This procedure will serve to validate predicted performance and may prevent an unexpected return to the surface during continued takeoff tests. A minimum of five acceptable runs should be flown by the FAA/AUTHORITY pilot, and these should be averaged with five acceptable runs flown by the manufacturer's pilot.

(5) Abuse Testing. Takeoff procedure abuse tests should be conducted to show that reasonably expected variations in service from the established takeoff procedures do not result in a significant increase in the established takeoff distances. Variations should include such considerations as under or over rotation during the takeoff initiation, under or over application of acceleration power, and missed TDP target parameters (e.g., time, height, or airspeed).

(6) Continued Climbout Path. The landing gear may be retracted at 35 feet. The climb should be continued at V_{TOSS} until 200 feet above the takeoff surface. The climb requirements of § 29.67(a)(1) should be met at 200 feet. It should be demonstrated that the rotorcraft, including any configuration changes, can be accelerated from V_{TOSS} to V_Y in a continuous maneuver without losing altitude. The airspeed and rotorcraft configuration (landing gear position, rotor RPM engine power, etc.) used to show compliance with the climb requirements of § 29.67(a)(2) should be attained at or prior to reaching 1,000 feet above the takeoff surface.

(7) Power. Power should be limited to minimum specification values on the operating engine(s). This may be accomplished by adjustment of the engine topping to minimum specification values including consideration of temperature effects on engine power. Turbine engine power does not vary directly with density altitude (H_D). At a given H_D, turbine engine power available varies with ambient temperature. Turbine

engines typically produce less horsepower as ambient temperature is increased (pressure altitude decreases) at a given density altitude, although some engines produce less horsepower at extremely cold temperatures. In either event, if one test sequence is to be utilized for a given H_D, it would be appropriate to restrict test power to the lowest value attainable from a minimum specification engine through the approved ambient temperature range at the density altitude of the test. To attain maximum weights for varying ambient conditions, the applicant may utilize a parametric mapping of power available, pressure altitude, and temperature effects. For this case, engine topping may be adjusted throughout a range appropriate to the test H_D.

(8) Aircraft Loading. Both forward and aft CG extremes should be spot checked to determine the critical loading for takeoff distances. Forward center of gravity is usually critical for continued takeoff distance tests while aft CG may be critical for the rejected takeoff due to forward/downward field of view. A minimum of two weights should be flown at each altitude if the manufacturer elects to schedule field length variation as a function of gross weight. One weight should be the maximum weight for prevailing conditions and the other weight(s) should be low enough to attain a sufficient spread to verify weight accountability.

(9) Extrapolation. Takeoff and landing data may be extrapolated up to 4000 feet along an established W/σ line, to the maximum gross weight of the rotorcraft. However, extrapolation will not be considered valid if unacceptable or marginally acceptable landing gear loads are experienced during testing at weights below the W/σ limit. See paragraph AC 29.77b(5) for further discussion of landing gear loads.

(10) Ambient Conditions. Appropriate test limits for ambient conditions such as wind and temperature are contained in paragraph AC 29.45. Test data should be corrected for existing wind conditions during takeoff distance testing. Credit for headwind conditions may be given during flight manual data expansion. Refer to paragraph AC 29.1587(a)(3)(iii) under “Wind Accountability” for allowable wind credit. Care should be applied in considering headwind credit for vertical operations as previous experience has resulted in difficulty collecting meaningful, repeatable data.

(11) Vertical Takeoffs.

(i) General. Guidelines for rotorcraft certification using vertical takeoff techniques were developed and utilized for civil certification programs many years ago. As experience has been gained, certain policy decisions have modified these guidelines. The reader should be familiar with the preceding discussion regarding conventional Category A takeoff profiles because duplicate information is not repeated here.

(ii) Takeoff Profile. A typical vertical takeoff profile for a ground level heliport is shown in figure AC 29.59A-1. The maneuver begins with the addition of sufficient power to initiate a climb to the TDP. It should be possible to make a safe landing without exceptional pilot skill if an engine fails at any point up to the TDP less

engine failure recognition time. At the TDP, the pilot becomes “go” oriented and continues the takeoff if an engine fails. The rotorcraft should not be allowed to descend below 15 feet above the takeoff surface during the continued takeoff. A typical profile for elevated heliports takeoff conditions is shown in figure AC 29.59A-2. Descent profile below the takeoff surface is allowed, after clearing the platform by at least a 15 feet radial margin, provided that the drop down height from the takeoff surface and the distance to reach V_{TOSS} with a positive rate of climb is given in the performance chapter of the RFM.

(iii) Takeoff Decision Point (TDP). For vertical takeoffs, the climb to the TDP is nearly vertical, and the TDP is typically defined primarily by height. Sufficient testing should be conducted to define a band of TDP conditions (heights) which will be consistent with anticipated variations in pilot technique and the minimum amount of equipment to be installed on the production aircraft. Rejected takeoffs are most critical from high TDP’s, and continued OEI takeoffs are most critical from low heights. Tests at the extremes of this band are intended to verify that the anticipated TDP band is safe and repeatable in service for reasonable variations in pilot technique. These extreme points should not be used for distance determination when averaging takeoff performance data.

(iv) Conduct of the Test. Vertical takeoff profiles should be flown from a pad simulating operational conditions because the sight picture may be critical to successful OEI operations, particularly for elevated heliports. At all points on the vertical takeoff flight path up to the TDP, the pilot, with reasonable head movement, shall be able to keep sufficient portions of two heliport boundaries (front and one side) or equivalent markings in view to achieve a safe landing in case of engine failure. Normally, a minimum 1-second delay or pilot recognition time interval, whichever is greater, is applied after the EFP before pilot collective control corrections are allowed. If the rotorcraft incorporates an engine failure warning device, engine failure recognition should not be less than the time required for the engine to spool down and activate the device.

(A) Establish the rejected takeoff distance as the horizontal distance from the rearmost point of the rotorcraft at the initiation of takeoff to the foremost point after the rotorcraft comes to a stop on the takeoff surface (including rotor tip path), assuming an engine failure in the vertical climb at the TDP.

(B) Establish the continued takeoff distance as the horizontal distance from lift-off to the point at which, following engine failure prior to the TDP, the rotorcraft achieves; for a ground level heliport, 35 feet above the takeoff surface and V_{TOSS} with a positive rate of climb; for an elevated heliport, the lowest point of the takeoff profile and not less than V_{TOSS} with a positive rate of climb. The continued takeoff profile from elevated heliports should clear the heliport obstructions by at least a 15 feet radial margin.

(C) When used, the back-up technique usually requires the pilot to keep sufficient portions of the helipad in view and involves a rearward movement from the takeoff point to the TDP. In such cases the rearward horizontal distance required should be established as the distance from the rearmost point of the rotorcraft at the initiation of takeoff to the rearmost part of the rotorcraft at TDP.

(D) If special helipad markings or other non-standard external references are required to achieve the vertical takeoff performance, these special references should be included in the limitations section of the RFM.

(v) Climb Requirements.

(A) Ground level heliport. The OEI takeoff profile should include a climb at V_{TOSS} to 200 feet above the takeoff surface then an acceleration in level flight from V_{TOSS} to V_Y and a climb at V_Y to 1000 feet above the lowest point of the takeoff profile. The climb requirements of § 29.67(a)(1) and (a)(2) may be met at referenced points located respectively at 200 feet and 1000 feet above the takeoff surface. The distance required to accelerate from V_{TOSS} to V_Y must be considered in determination of the climb gradient required by § 29.1587 (a)(6)(i) and (a)(6)(ii).

(B) Elevated heliport. The OEI takeoff profile should include a climb at V_{TOSS} to 200 feet above the lowest point of the takeoff profile then an acceleration in level flight from V_{TOSS} to V_Y and a climb at V_Y to 1000 feet above the lowest point of the takeoff profile. The climb requirements of § 29.67(a)(1) and (a)(2) may be met at referenced points located respectively at 200 feet and 1000 feet above the lowest point of the takeoff profile.

(vi) Extrapolation. Basic guidelines for extrapolation are contained in paragraph AC 29.45. Weight can not be extrapolated above test weight. Altitude extrapolation should be limited to a maximum of $\pm$ 4000 feet.

(12) Night Operations.

(i) A minimum of three normal takeoffs (and landings) should be conducted to ensure that aircraft lighting (internal and external) is adequate to allow normal Category A operations at night.

(ii) Engine failures should be simulated from points along the recommended takeoff profile. Night OEI rejected takeoffs and continued takeoffs from the TDP should be conducted to ensure adequate night field of view and realization of Category A field lengths.

(iii) If special airfield marking/lighting is used as a reference or to define the TDP, the aircraft external lighting should be evaluated to ensure the airfield marking/lighting is adequately visible for night operations.

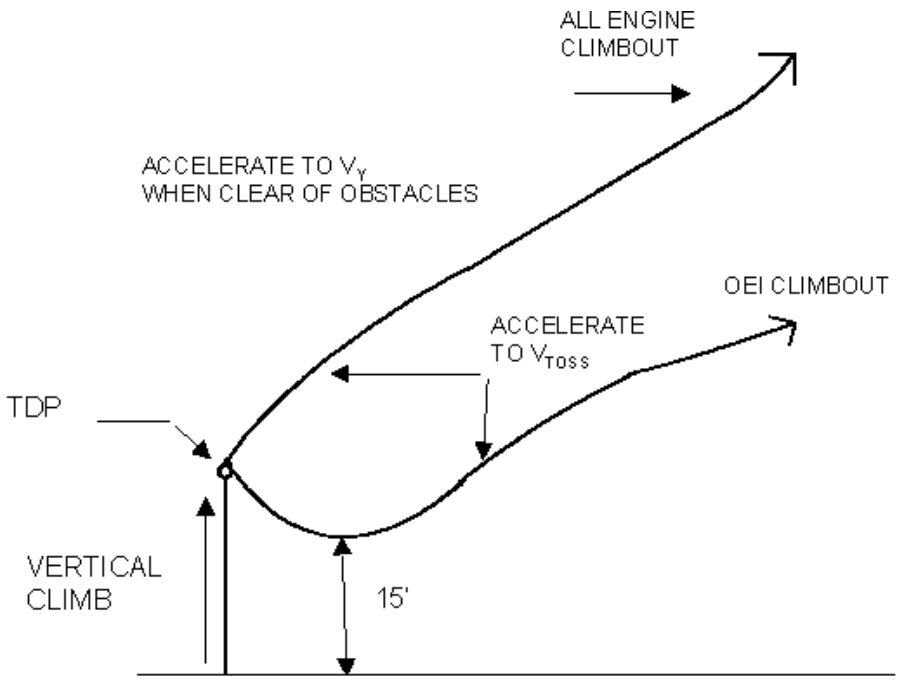

FIGURE AC 29.59A-1 CATEGORY A VERTICAL TAKEOFF PROFILE
GROUND LEVEL HELIPORT

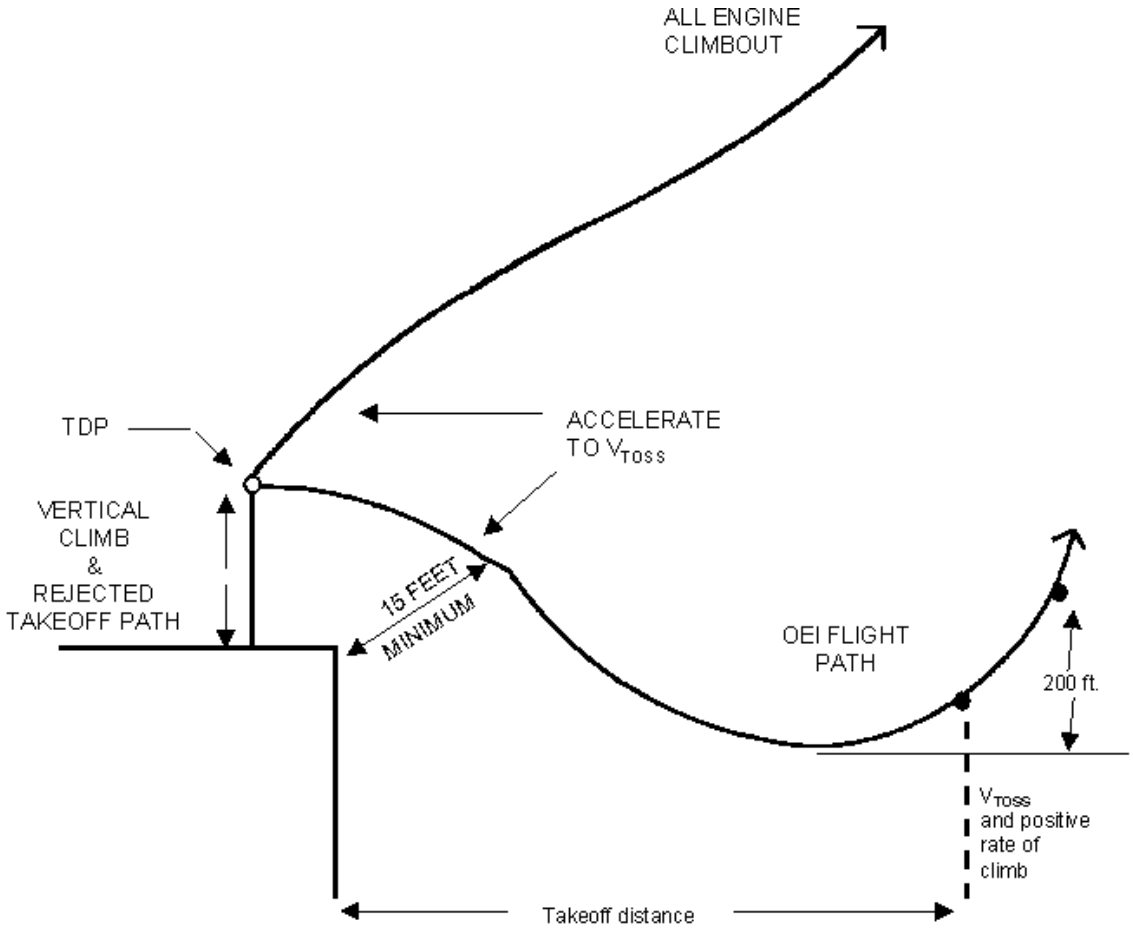

FIGURE AC 29.59A-2 CATEGORY A VERTICAL TAKEOFF PROFILE ELEVATED HELIPORT

AC 29.63. § 29.63 (Amendment. 29-12) TAKEOFF: CATEGORY B.

a. Explanation.

(1) Takeoff distance is the horizontal distance measured from an initial position to a point 50 feet above the takeoff surface with all engines operating within approved limits.

(2) The height-velocity diagram is normally developed and accepted prior to conducting takeoff distance tests. Takeoff distance tests are conducted avoiding the critical areas of the diagram. The amount of power utilized in determining takeoff distance may not be greater than that used in constructing the takeoff corridor and "knee" portions of the height-velocity diagram. Power might also have to be constrained, depending upon the amount of excess power available, so that a "reasonable" nose down pitch attitude is not exceeded during the initial portion of the takeoff run. Acceptable values used during past programs include:

(i) Hover power + 10 percent (not to exceed rated engine takeoff power limits)

(ii) A percent transmission limiting torque (not to exceed rated engine takeoff power limits), and

(iii) Engine (or transmission) limiting power for the particular ambient conditions.

(3) The critical center of gravity should be used for takeoff distance tests. Critical center of gravity should be established analytically or from previous testing and may be forward or aft depending on the type of rotorcraft. Items that should be considered in determining the critical center of gravity are climb performance and cockpit visibility. At least two gross weights should be flown at each test altitude, if weight accountability is desired, in order to validate the manufacturers prediction of weight effects.

(4) The speed utilized at the 50-foot point in the takeoff profile (V_{50} speed) may be largely determined by the ability to obtain reliable, repeatable airspeed indications which can also comply with § 29.1323. Section 29.1323 ties the airspeed system accuracy requirements to the climbout speed. The climbout speed should be that speed attained at 50 feet in complying with § 29.63.

b. Procedures.

(1) Instrumentation. A ground station will measure ambient temperature, humidity (if applicable), and wind. For allowable wind conditions and engine power considerations refer to paragraph AC 29.45. A photo panel or hand recording method

may be utilized, as necessary, to record engine and flight parameters. A phototheodolite, takeoff and landing camera, or other approved instrumentation is utilized to measure distance, heights, speed, and time.

(2) Conduct of the Test. If the applicant elects to show weight effects on distance, at least two weights should be flown and, depending on the range of takeoff and landing altitudes to be approved, at least two test altitudes should be flown. Altitudes should be sufficiently far apart to include a major portion of the approved takeoff and landing altitude range. Takeoff profiles should be started from an initial condition. For takeoffs from a hover, the hover height should be determined by performing fixed collective takeoffs as described in paragraph AC 29.51. "Takeoff" power should be smoothly applied and the aircraft nose lowered as necessary to accelerate without gaining excessive altitude. It must be possible to conduct a consistent takeoff profile clear of the height-velocity diagram with normal pilot effort and skill. A minimum of five good runs should be flown by the FAA/AUTHORITY pilot at each altitude and weight. Runs by the company and FAA/AUTHORITY pilot may be averaged. Effects of missing the V_{50} speed by some amount (± 5 knots, for example) or other small changes in profile should be evaluated to determine if gross performance changes result from small piloting errors. Engine failures should be conducted along the takeoff profile to assure safe landing capability. Past programs have shown the low speed point immediately after addition of power to be particularly critical. Night takeoffs should at least be qualitatively evaluated to assure the takeoff procedures are compatible for night operation.

(3) Test Results. Test results are utilized in constructing the flight manual takeoff distance charts required by § 29.1587. The takeoff surface utilized in conducting these takeoff distance and engine failure tests should be included in the flight manual. The "climbout speed" should also be defined and included in the flight manual. The airspeed utilized at the 50-foot point in the conduct of these tests must be clearly defined to allow compliance with § 29.1323. Test results may be extrapolated in accordance with guidance contained in paragraph AC 29.45.

(4) Test Techniques. For the FAA/AUTHORITY test data runs which will result in rotorcraft flight manual (RFM) performance, only the operational cockpit instrumentation as shown on the minimum equipment list and the piloting procedures from the RFM should be used. A useful technique is to "lead" the targeted V_{50} speed by a fixed amount, so that a smooth, consistent, and operationally realistic transition may be made between the acceleration and climbout phases; e.g., begin rotation at 35 knots to achieve 46 knots passing 50 feet. This and other pertinent information defining the takeoff flight path are required flight manual entries per § 29.1587(b).

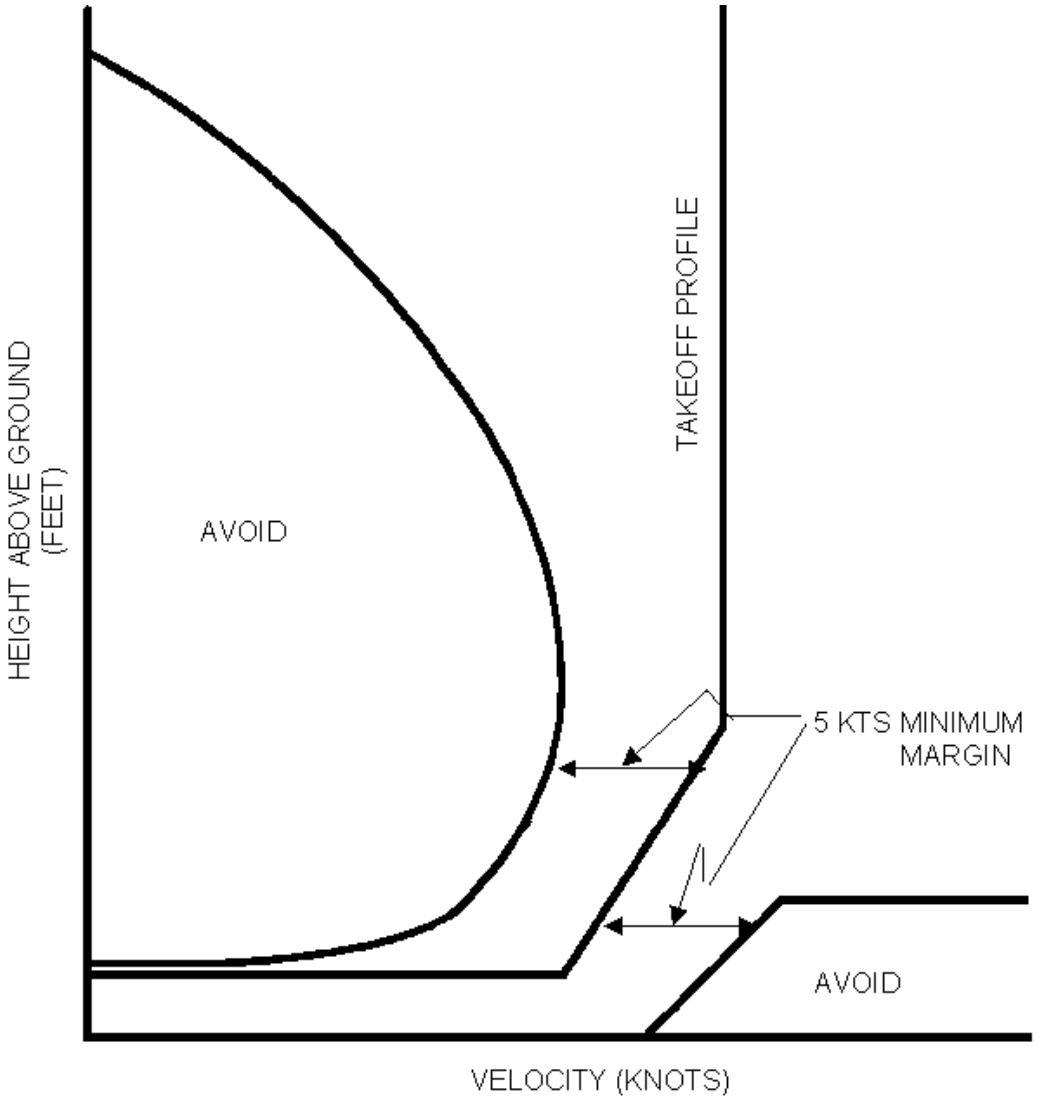

FIGURE AC 29.63-1 CONVENTIONAL TAKEOFF PROFILE CATEGORY B

AC 29.65. § 29.65 (Amendment 29-15) CLIMB: (ALL ENGINES OPERATING).

a. Explanation.

(1) Section 29.65 requires in part that the steady rate of climb be determined for each Category B rotorcraft with maximum continuous power on each engine for the range of weights, altitudes, and temperatures for which certification is requested. The climb airspeed should be the best rate-of-climb (V_Y) for standard day sea level conditions at maximum weight and at a speed(s) selected by the applicant for other conditions not to exceed V_{NE}. The applicant can either publish a climb schedule in accordance with the above or utilize a constant climb airspeed for all conditions. Equivalent levels of safety have been found wherein the applicant was allowed to select a climb airspeed that was not the actual V_Y. The selected airspeed must be consistent with the speed used to show compliance with such items as cooling, stability, etc. The rate-of-climb resulting from the selected climb airspeed versus that from the actual V_Y shall not differ to an extent that a pilot will be encouraged, by appreciable increases in climb performance to fly a climb airspeed different from that published in the Flight Manual.

(2) For Category A rotorcraft, if V_{NE} at any altitude is less than the maximum gross weight sea level standard day condition V_Y, the steady rate-of-climb must be determined at the climb speed(s) selected by the applicant not to exceed V_{NE}. The climb performance must be determined from 2,000 feet below the altitude from where V_{NE} intersects V_Y up to the maximum altitude for which certification is requested. This should be done utilizing maximum continuous power on each engine with the landing gear retracted.

b. Procedure to Determine V_Y.

(1) Sawtooth climbs may be used to determine the best rate-of-climb airspeed V_Y. If such a technique is used, climbs should be flown in pairs on opposite headings 90° to the winds at the test altitude. This procedure will minimize any windshear effects. All testing should be done in smooth air. Windshear is usually an indication of unstable air or a temperature inversion and should be avoided. The climbs are flown on reciprocal headings for approximately 5 minutes through a 1,000-foot band, or a comparable time/altitude band, using maximum continuous power at a constant airspeed. Periodic power adjustments may be necessary. Additional reciprocal heading climbs must also be conducted at different airspeeds sufficient to bracket the lowest point of the power required versus airspeed curve. This technique can be repeated at different altitudes to obtain V_Y throughout the altitude range.

(2) Level flight performance (speed power) may also be used to determine the best rate-of-climb airspeed (V_Y). The testing should be done in smooth air. The advantage of this method is that less time is required, and the accuracy is equivalent to the sawtooth climb method. The test can be repeated at various altitudes to determine the V_Y throughout the altitude range desired for the rotorcraft. The test at each altitude

should be conducted at a constant weight over sigma (W/σ). The test is normally started at the desired W/σ with maximum continuous power, or at V_{NE}, in level flight. A series of points should be taken, reducing airspeed 10 to 15 knots between points, with the lowest speed point at approximately 20 to 30 knots. Weight should be computed for each point and the test altitude adjusted to maintain a constant W/σ. After the data are reduced to standard day conditions, the minimum power required airspeed will be the V_Y speed.

(3) Prior to the flight test, the rotorcraft should be ballasted to the desired gross weight and the critical center of gravity. The airspeed should be stabilized prior to data acquisition. Data to be recorded includes time, altitude, airspeed, ambient temperature, engine parameters, torque(s), rotor RPM, fuel reading, aircraft heading, external configuration, etc. Power setting, weight, and climb airspeed should be planned prior to flight. For some turboshaft engines, temperature and/or engine speed limits may be reached prior to a limiting torque. The test team should verify that the resulting power utilized in these tests closely approximates the power producing capabilities of installed minimum specification engine.

c. Procedure to Determine all Engine Operating Climb Performance.

(1) Background. Continuous climbs are conducted at the appropriate climb airspeeds as outlined above in order to obtain the rotorcraft's climb performance for the flight manual. By-products are a qualitative evaluation of the rotorcraft handling characteristics in a climb and engine data to assist in the determination of installed power available.

(2) Techniques. The techniques used to determine this performance may be the same as those used in the V_Y determination. The climbs are conducted on reciprocal headings at the established airspeed(s) through the target altitude range. The same parameters are recorded. The rotorcraft will usually climb very rapidly during the first few thousand feet; therefore, the data acquisition method must be timely if accurate results are expected. This procedure is usually repeated at weight extremes. The resulting data must then be corrected for power and weight. Power and weight corrections are satisfactory, provided the test powers and weights closely approximate the target values to make the weight and power corrections accurate. Once this data is finalized and corrected for all the flight test variables, interpolation for intermediate weights can be made with a high degree of reliability. If the rotorcraft has any stability augmentation system, vent systems, etc., which may influence the climb performance, then it must be accounted for. Caution should be taken that anti-ice, air-conditioning, etc., are not on unless the performance is being established specifically for those conditions.

AC 29.65A (AC 29.64) §§ 29.64 and 29.65 (Amendment 29-39) CLIMB (GENERAL AND ALL ENGINES OPERATING).

a. Explanation.

(1) Amendment 29-39 relocated and clarified the general climb requirements into a new § 29.64 and added requirements to determine Category A climb performance in § 29.65. The guidance material presented in paragraph AC 29.67 does not apply to rotorcraft certified with Amendment 29-39 or later. Sections 29.64 and 29.65 require that the steady rate of climb be determined with maximum continuous power on each engine for the range of weights, altitudes, and temperatures for which certification is requested. The climb airspeed should be the best rate-of-climb (V_Y) for standard day sea level conditions at maximum weight and at a speed(s) selected by the applicant for other conditions not to exceed V_{NE}. The applicant can either publish a climb schedule in accordance with the above or utilize a constant climb airspeed for all conditions. Equivalent levels of safety have been found wherein the applicant was allowed to select a climb airspeed that was not the actual V_Y. The selected airspeed should be consistent with the speed used to show compliance with such items as cooling, stability, etc. The rate-of-climb resulting from the selected climb airspeed versus that from the actual V_Y shall not differ to an extent that a pilot will be encouraged by appreciable increases in climb performance to fly a climb airspeed different from that published in the Flight Manual.

(2) If V_{NE} at any altitude is less than the maximum gross weight sea level standard day condition V_Y, the steady rate-of-climb should be determined at the climb speed(s) selected by the applicant not to exceed V_{NE}. The climb performance should be determined from 2,000 feet below the altitude from where V_{NE} intersects V_Y up to the maximum altitude for which certification is requested. This should be done utilizing maximum continuous power on each engine with the landing gear retracted.

b. Procedure to Determine V_Y.

(1) Sawtooth climbs may be used to determine the best rate-of-climb airspeed V_Y. If such a technique is used, climbs should be flown in pairs on opposite headings 90° to the winds at the test altitude. This procedure will minimize any windshear effects. All testing should be done in smooth air. Windshear is usually an indication of unstable air or a temperature inversion and should be avoided. The climbs are flown on reciprocal headings for approximately 5 minutes through a 1,000-foot band, or a comparable time/altitude band, using maximum continuous power at a constant airspeed. Periodic power adjustments may be necessary. Additional reciprocal heading climbs should also be conducted at different airspeeds sufficient to bracket the lowest point of the power required versus airspeed curve. This technique can be repeated at different altitudes to obtain V_Y throughout the altitude range.

(2) Level flight performance (speed power) may also be used to determine the best rate-of-climb airspeed (V_Y). The testing should be done in smooth air. The advantage of this method is that less time is required, and the accuracy is equivalent to the sawtooth climb method. The test can be repeated at various altitudes to determine the V_Y throughout the altitude range desired for the rotorcraft. The test at each altitude should be conducted at a constant weight over sigma (W/σ). The test is normally

started at the desired W/σ with maximum continuos power, or at V_{NE}, in level flight. A series of points should be taken, reducing airspeed 10 to 15 knots between points, with the lowest speed point at approximately 20 to 30 knots. Weight should be computed for each point and the test altitude adjusted to maintain a constant W/σ. After the data are reduced to standard day conditions, the minimum power required airspeed will result in the airspeed for maximum rate of climb. However, aircraft stability may suggest that a higher climb speed may be used for $V_{Y.}$

(3) Prior to the flight test, the rotorcraft should be ballasted to the desired gross weight and the critical center of gravity. The airspeed should be stabilized prior to data acquisition. Data to be recorded includes time, altitude, airspeed, ambient temperature, engine parameters, torque(s), rotor RPM, fuel reading, aircraft heading, external configuration, etc. Power setting, weight, and climb airspeed should be planned prior to flight. For some turboshaft engines, temperature and/or engine speed limits may be reached prior to a limiting torque. The test team should verify that the resulting power utilized in these tests closely approximates the power producing capabilities of installed minimum specification engine.

c. Procedure to Determine all Engine Operating Climb Performance.

(1) Background. Continuous climbs are conducted at the appropriate climb airspeeds as outlined above in order to obtain the rotorcraft's climb performance for the flight manual. By-products are a qualitative evaluation of the rotorcraft handling characteristics in a climb and engine data to assist in the determination of installed power available.

(2) Techniques. The techniques used to determine this performance may be the same as those used in the V_Y determination. The climbs are conducted on reciprocal headings at the established airspeed(s) through the target altitude range. The same parameters are recorded. The rotorcraft will usually climb very rapidly during the first few thousand feet; therefore, the data acquisition method should be timely if accurate results are expected. This procedure is usually repeated at weight extremes. The resulting data should then be corrected for power and weight. Power and weight corrections are satisfactory, provided the test powers and weights closely approximate the target values to make the weight and power corrections accurate. Once this data is finalized and corrected for all the flight test variables, interpolation for intermediate weights can be made with a high degree of reliability. If the rotorcraft has any stability augmentation system, vent systems, etc., which may influence the climb performance, then it should be accounted for. Caution should be taken that anti-ice, air-conditioning, etc., are not on unless the performance is being established specifically for those conditions.

AC 29.67. § 29.67 (Amendment 29-34) CLIMB: ONE ENGINE INOPERATIVE.

a. Explanation.

(1) Section 29.67 requires that Category A rotorcraft must be capable of a steady rate-of-climb without ground effect, of at least 100 feet per minute for all combinations of weight, altitude, temperature, and center of gravity for which takeoffs are to be scheduled. The rate-of-climb is determined with the critical engine inoperative and the remaining engine(s) operating within approved operating limits. The landing gear is extended and the airspeed is the takeoff safety speed (V_{TOSS}) selected by the applicant.

(2) In addition, the steady rate-of-climb must be at least 150 feet per minute at 1,000 feet above the takeoff surface for which takeoffs are to be scheduled. The rate-of-climb will be determined with the critical engine inoperative and the remaining engine(s) at maximum continuous or the 30-minute minimum specification installed power available values. The landing gear is retracted and the airspeed is that selected by the applicant.

b. Procedures.

(1) One of the acceptable procedures used to obtain the required climb performance is similar to the all engine climb performance determination (paragraph AC 29.65) except that the V_{TOSS} and the Category A climb speed may be selected by the applicant for different weights and ambient conditions. The Category A climb speed could be a single speed, vary as V_Y does, or actually be V_Y. Making a Category A climbout speed equal to V_Y should be encouraged to simplify cockpit procedures. The required results are the allowable weight, altitude, and temperature combinations wherein the rotorcraft is capable of demonstrating 100 feet per minute rate-of-climb at V_{TOSS} and 150 feet per minute rate-of-climb at 1,000 feet above the takeoff surface. Either of these two climb requirements may establish the maximum allowable takeoff weight.

(2) For multiengine Category B rotorcraft with engine isolation, the steady rate of climb or descent must be determined at V_Y, using maximum continuous power and 30-minute power if that rating is approved. Appropriate performance data must be included in the Rotorcraft Flight Manual to cover variations in gross weight, altitude, and temperature.

(3) Since climb performance testing is normally conducted separately from Category A and B takeoff performance testing, it is imperative the engine power(s), rotor RPM, and aircraft configuration be the same as those used during the takeoff testing to ensure the climb performance demonstrated will be that attainable immediately after an engine failure during takeoff. The allowable pilot/crew actions during the Category A takeoff and climbout maneuver must be thoroughly evaluated. The pilot's full attention is required to control the rotorcraft during this phase of flight. Permitting the pilot to readjust (beep) the rotor RPM during this phase of flight should be considered only if such adjustment can be accomplished without a significant increase in pilot workload.

(4) A typical sequence for selecting the various speeds to comply with this requirement is as follows:

(i) Conduct sawtooth climbs at the various airspeeds (V_Y and below) up to the proposed takeoff and landing altitudes. From this a determination can be made regarding the maximum allowable weight that will result in a rate of climb of 150 feet per minute at the selected V_Y for the proposed ambient conditions.

(ii) At the same time determine the minimum value of V_{TOSS} that will result in 100 feet per minute rate of climb at the maximum weight determined in (b)(4)(i).

AC 29.67A. <u>§ 29.67 (Amendment 29-39) CLIMB: ONE ENGINE INOPERATIVE</u>.

a. <u>Explanation</u>.

(1) Amendment 29-39 expanded the OEI rate of climb requirements. The guidance material presented in paragraph AC 29.67 does not apply to rotorcraft certified with Amendment 29-39 or later. Section 29.67 requires that Category A rotorcraft should be capable of a steady rate-of-climb without ground effect 200 feet above the takeoff surface, of at least 100 feet per minute for all combinations of weight, altitude, temperature, and center of gravity for which takeoffs are to be scheduled. The rate-of-climb is determined with the critical engine inoperative and the remaining engine(s) operating within approved operating limits. The landing gear is extended and the airspeed is the takeoff safety speed (V_{TOSS}) selected by the applicant.

(2) The steady rate-of-climb should be at least 150 feet per minute at 1,000 feet above the takeoff surface for which takeoffs are to be scheduled. The rate-of-climb will be determined with the critical engine inoperative and the remaining engine(s) at maximum continuous or the 30-minute minimum specification installed power available values. The landing gear is retracted and the airspeed is that selected by the applicant.

(3) Additionally, the steady state rate of climb or descent must be determined with the critical engine inoperative and the remaining engines at OEI maximum continuous power and at 30-minute OEI power if applicable. This performance must be scheduled throughout the ranges of weight, altitude and temperatures for which certification is requested with the landing gear retracted, at an airspeed selected by the applicant.

b. <u>Procedures</u>.

(1) One of the acceptable procedures used to obtain the required climb performance is similar to the all engine climb performance determination (paragraph AC 29.65) except that the V_{TOSS} and the Category A climb speed may be selected by the applicant for different weights and ambient conditions. The Category A climb speed could be a single speed, vary as V_Y does, or actually be V_Y. Making a Category A climbout speed equal to V_Y should be encouraged to simplify cockpit

procedures. The required results are the allowable weight, altitude, and temperature combinations wherein the rotorcraft is capable of demonstrating 100 feet per minute rate-of-climb at V_{TOSS} at a height of 200 feet above the takeoff surface and 150 feet per minute rate-of-climb at 1,000 feet above the takeoff surface. Either of these two climb requirements may establish the maximum allowable takeoff weight.

(2) For multiengine Category B rotorcraft with engine isolation, the steady rate of climb or descent should be determined at V_Y, using maximum continuous power, maximum continuous OEI power, and 30-minute power if that rating is approved. Appropriate performance data should be included in the Rotorcraft Flight Manual to cover variations in gross weight, altitude, and temperature.

(3) Since climb performance testing is normally conducted separately from Category A and B takeoff performance testing, it is imperative the engine power(s), rotor RPM, and aircraft configuration be the same as those used during the takeoff testing to ensure the climb performance demonstrated will be that attainable immediately after an engine failure during takeoff. The allowable pilot/crew actions during the Category A takeoff and climbout maneuver should be thoroughly evaluated. The pilot's full attention is required to control the rotorcraft during this phase of flight. Permitting the pilot to readjust (beep) the rotor RPM during this phase of flight should be considered only if such adjustment can be accomplished without a significant increase in pilot workload.

(4) A typical sequence for selecting the various speeds to comply with this requirement is as follows:

(i) Conduct sawtooth climbs at the various airspeeds (V_Y and below) up to the proposed takeoff and landing altitudes. From this, a determination can be made regarding the maximum allowable weight that will result in a rate of climb of 150 feet per minute at the selected V_Y for the proposed ambient conditions.

(ii) At the same time, determine the minimum value of V_{TOSS} that will result in 100 feet per minute rate of climb at the maximum weight determined in b(4)i.

AC 29.71. <u>§ 29.71 (Amendment 29-12) ROTORCRAFT ANGLE OF GLIDE: CATEGORY B.</u>

a. <u>Explanation</u>.

(1) Performance capabilities during stabilized autorotative descent are useful pilot tools to assist in the management of a Category B rotorcraft when all engines fail. This information is also useful in determining the suitability of available landing areas along a given route segment.

(2) Two speeds are of particular importance, the speed for minimum rate of descent and the speed for best angle of glide. These speeds are required as flight manual entries per § 29.1587. The speed for minimum rate of descent is useful for

engine failure conditions at higher altitudes and the pilot is required to perform some time-related task, engine restart, float inflation, radio calls, etc. The speed for best angle of glide is a somewhat higher speed that is of particular use when it is necessary to reach a distant landing area. This speed, with appropriate rotor RPM, provides the maximum horizontal distance available from a particular altitude assuming zero wind conditions.

(3) A third speed, recommended autorotation speed, may be provided in addition to minimum rate of descent speed and maximum glide angle speed. The recommended speed for autorotation is usually optimized to assure an effective flare capability and yet be slow enough to allow a controlled, relatively slow touchdown condition. Recommended autorotation speed is ordinarily between the minimum rate of descent and maximum glide angle speeds. The recommended autorotation speed may be provided in the Rotorcraft Flight Manual. The relationship between minimum rate of descent, best glide angle, and recommended autorotation speed is shown in figure AC 29.71-1.

(4) Forward center of gravity is usually critical, however, center of gravity effects should be spot-checked to confirm this for a given design.

b. Procedures.

(1) Tests are conducted at speeds which bracket the anticipated speeds for minimum rate of descent and best glide angle. On a power required plot, the speed for minimum power required approximates the speed for minimum rate of descent. The speed for maximum range glide may be estimated by drawing a tangent from the origin to the power required curve.

(2) Autorotative performance tests may be conducted in conjunction with the climb performance tests. The required data are similar for both tests and it is sometimes convenient and efficient to run alternating climbs and descents through a desired altitude band. Descents should be conducted on reciprocal headings and results averaged in the same manner as climb performance tests.

(3) A reduction in rotor RPM from the normal power-on value may enhance autorotative performance. If the applicant wishes to develop autorotative performance at RPM values significantly below the governing or power-on range, the practicality of reducing and controlling RPM at the lower value and of then increasing RPM as a landing is approached, must be considered. At low weights and low density altitudes, full down collective may automatically produce lower RPM values and this condition is, of course, acceptable provided the approved power-off RPM range is not exceeded.

(4) Care must be taken to make certain that no engine power is delivered to the rotor drive system since a very small amount of power can have a large effect on descent performance.

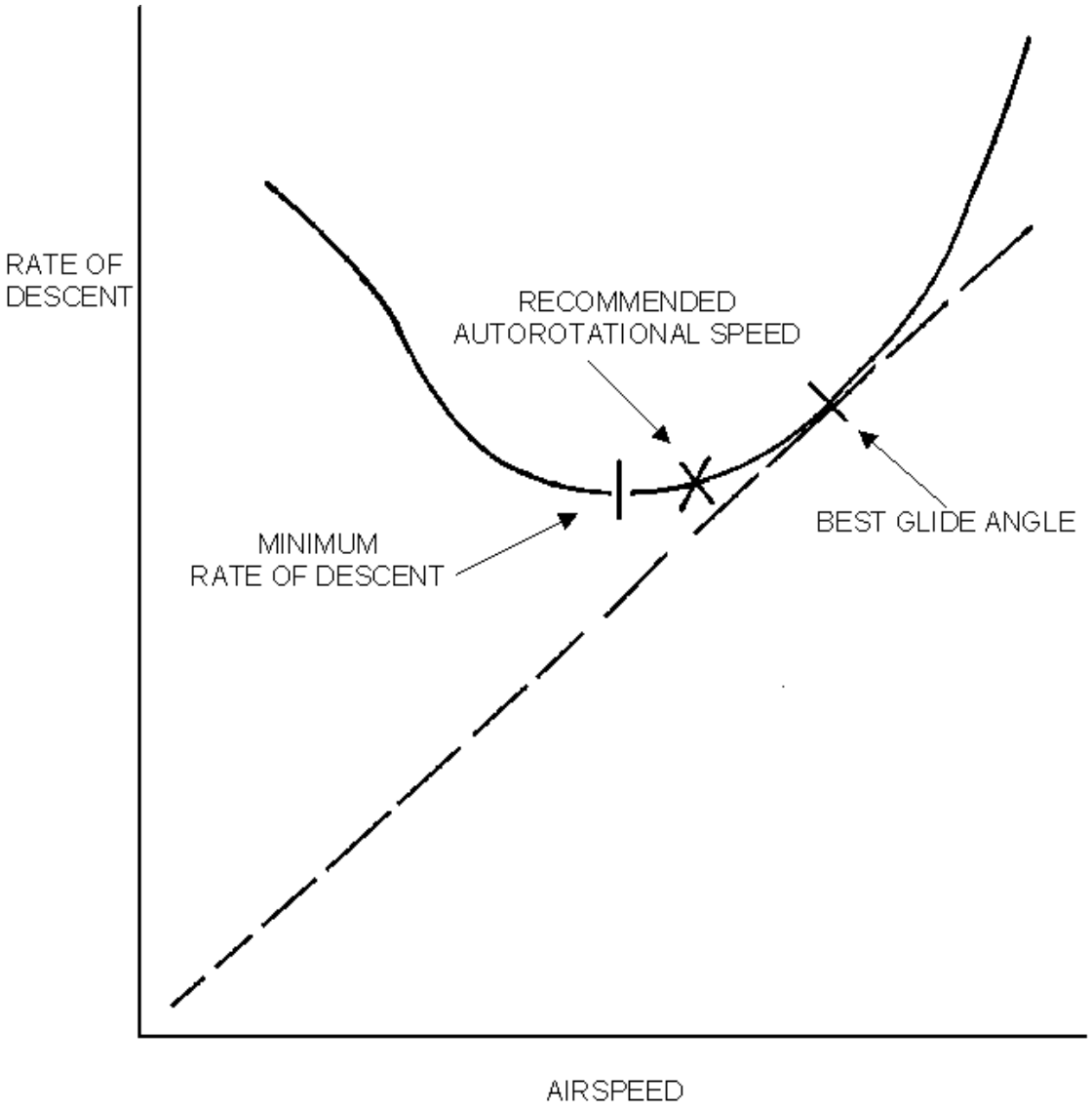

FIGURE AC 29.71-1 AUTOROTATIONAL CHARACTERISTICS - TYPICAL

AC 29.73. § 29.73 (Amendment 29-3) PERFORMANCE AT MINIMUM OPERATING SPEED. HOVER PERFORMANCE FOR ROTORCRAFT.

(For performance at minimum operating speed and for hover performance after Amendment 38, see § 29.49 and paragraph AC 29.49).

a. Explanation.

(1) For the purpose of this manual, the word “hover” applies to a rotorcraft that is airborne at a given altitude over a fixed geographical point regardless of wind. Pure hover is accomplished only in still air.

(2) The regulatory requirement for hover performance, § 29.73, refers to hover in ground effect (IGE). For some applications, such as external load operations, hover performance out-of-ground effect (OGE) is necessary; however, it is not required by this section. Hover OGE is that condition, where an increase in height above the ground will not require additional power to hover. Hover OGE is the absence of measurable ground effect. It can be less than one rotor diameter at low gross weight increasing significantly at high gross weights. The lowest OGE hover height at gross weight may be approximated by placing the lowest part of the vehicle 1 ½ rotor diameters above the surface.

(3) The objective of hover performance tests is to determine the power required to hover at different gross weights, ambient temperatures, and pressure altitudes. Using nondimensional power coefficients (C_P) and thrust coefficients (C_T) for normalizing and presenting test results, a minimum amount of data are required to cover the rotorcraft’s operating envelope.

(4) Hover performance tests must be conducted over a sufficient range of pressure altitudes and weights to cover the approved ranges of those variables for takeoff and landings. Additional data should be acquired during cold ambient temperatures, especially at high altitudes, to account for possible Mach effects.

(5) The minimum hover height for which data should be obtained and subsequently presented in the flight manual should be the same height consistent with the minimum hover height demonstrated during the takeoff tests. Refer to paragraph AC 29.51 for the procedure to determine the minimum allowable hover height.

b. Procedures.

(1) Two methods of acquiring hover performance data are the tethered and free flight techniques. The tethered technique is accomplished by tethering the rotorcraft to the ground using a cable and load cell. The load cell and cable are attached to the ground tie-down and to the rotorcraft cargo hook. The load cell is used to measure the rotorcraft’s pull on the cable. Hover heights are based on skid or wheel height above

the ground. During tethered hover tests, the rotorcraft should be at light gross weight. The rotorcraft will be stabilized at a fixed power setting and rotor speed at the appropriate skid or wheel height. Once the required data are obtained, power should be varied from the minimum to the maximum allowed at various rotor RPM. This technique will produce a large C_T/C_P spread. The load cell reading is recorded for each stabilized point. The total thrust the rotor produces is the rotorcraft's gross weight, weight of the cables and load cell plus cable tension. Care must be taken that the cable tension does not exceed the cargo hook limit or load capacity of the tie-down. For some rotorcraft, it may be necessary to ballast the rotorcraft to a heavy weight in order to record high power hover data.

(2) The pilot maintains the rotorcraft in position so that the cable and load cell are perpendicular to the ground. To insure the cable is vertical, two outside observers, one forward of the rotorcraft and one to one side, can be used. Either hand signals or radio can be used to direct the pilot. The observers should be provided with protective equipment. This can also be accomplished by attaching two accelerometers to the load cell which sense movement along the longitudinal and lateral axes. Any displacement of the load cell will be reflected on instrumentation in the cockpit and by reference to this instrumentation, the rotorcraft can be maintained in the correct position. Increased caution should be utilized as tethered hover heights are decreased because the rotorcraft may become more difficult to control precisely. The tethered hover technique is especially useful for OGE hover performance data because the rotorcraft's internal weight is low and the cable and load cell can be jettisoned in the event of an engine failure or other emergency.

(3) To obtain consistent data, the wind velocity should be less than 3 knots or less as there are no accurate methods of correcting hover data for wind effects. Large rotorcraft with high downwash velocities may tolerate higher wind velocities. The parameters usually recorded at each stabilized condition are:

(i) Engine torques.

(ii) Rotor speed.

(iii) Ambient temperatures.

(iv) Pressure altitude.

(v) Fuel used (or remaining).

(vi) Load cell reading.

(vii) Generator(s) load.

As a technique, it is recommended the rotorcraft be loaded to a center of gravity near the hook to minimize fuselage angle changes with varying powers. All tethered hover

data should be verified by a limited spotcheck using the free flight technique. The free flight technique as contained in paragraph b(4) below will determine if any problems, such as load cell malfunctions have occurred. The free flight hover data must fall within the allowable scatter of the tethered data.

(4) If there are no provisions or equipment to conduct tethered hover tests, the free flight technique is also a valid method. The disadvantage of this technique as the primary source of data acquisition is that it is very time consuming. In addition a certain element of safety is lost OGE in the event of emergency. The rotorcraft must be reballasted to different weights to allow the maximum C_T/C_P spread. When using the free flight technique, either as a primary data source or to substantiate the tethered technique, the same considerations for wind, recorded parameters, etc., as used in the tethered technique apply. Free flight hover tests should be conducted at CG extremes to verify any CG effects. If the rotorcraft has any stability augmentation system which may influence hover performance, it must be accounted for.

(5) It is extremely difficult to determine when a rotorcraft is hovering OGE at high altitudes above ground level since there is no ground reference. In a true hover, the rotorcraft will drift with the wind. Numerous techniques have been tried to allow OGE hover data acquisition at high altitudes, all of which have resulted in much data scatter. Until a method is proposed and found acceptable to the FAA/AUTHORITY, OGE hover data must be obtained at the various altitude sites where IGE hover data is obtained. Hover performance can usually be extrapolated up to a maximum of 4,000 feet.

AC 29.75. <u>§ 29.75 (Amendment 29-17) LANDING</u>.

a. <u>Explanation</u>.

(1) This rule incorporates all of the landing performance requirements for transport category rotorcraft. It consolidates requirements for landing data, Category A landing, Category A flight data, and Category B landing. Parallel takeoff requirements are located in four separate sections of the rule, §§ 29.51 through 29.63. As such, to assure necessary subjects are treated separately, the following discussion will be separated into three parts: (a) a general discussion of basic landing distance requirements, (b) Category A requirements (including vertical landing), and (c) Category B requirements.

(2) All landing performance data are corrected to a smooth, dry, hard, level landing surface condition. As with other flight maneuvers, landings must be accomplished with acceptable flight and ground characteristics using normal pilot skills. The rule states that Category A and B landing data must be determined at each approved WAT (Weight, Altitude, Temperature) condition. Reasonable sampling and extrapolation methods are, of course, allowed. General guidance on those subjects is given in paragraph AC 29.45. As in other performance areas, engines must be

operated within approved limits. Power considerations are the same as those described under paragraph b(2)(ii)(C).

(3) Unlike fixed wing aircraft, rotorcraft typically require significantly more landing surface area with an engine inoperative than with all engines operating. Because of this characteristic, the landing distance requirements are met with at least one engine inoperative to assure the most conservative landing distance measurement is achieved.

b. Procedures.

(1) Category A Requirements.

(i) Explanation. The Category A certification concept limits landing weight to a value that will allow the rotorcraft, following an engine failure at the landing decision point (LDP), to land within the available runway or to execute a balked landing, descending no lower than 35 feet above the landing surface. See figure AC 29.75-1.

(A) LDP. The Category A landing profile begins with an assumed engine failure at or prior to the LDP. The LDP is typically defined in terms of airspeed, rate of descent, and altitude above the landing surface. The approach path angle can be defined by LDP airspeed and rate of descent values. Definition of the LDP should include an approach angle because both the landing distance and the missed approach path are significantly influenced by landing approach angle. At any point in the single engine approach path down to and including the LDP, the pilot may elect to land or to execute a balked landing and he is assured both an adequate surface area for OEI landing and adequate climb capability for an OEI balked landing. Said another way, if an engine fails at any point down to and including the LDP, the pilot may safely elect to land or to “go around” by executing a balked landing. The LDP must be defined to permit acceleration to V_{TOSS} at an altitude no lower than 35 feet above the landing surface. The LDP represents a “commit” point for landing. Prior to the LDP in the one engine inoperative approach, the pilot has a choice, he may either land or fly away. After passing the LDP he no longer has sufficient energy to assure transition to a balked landing condition without contacting the landing surface. If an engine fails after LDP in a normal (all engine) landing the pilot is committed to land. The LDP and landing approach path must be defined such that the critical areas of the height-velocity diagram are avoided. A typical LDP for conventional Category A profiles is 100 feet above the landing surface. LDP should be specified in terms of both actual altitude above the landing surface and indicated barometric altitude. Speed at the LDP should be specified in terms of indicated airspeed.

(B) Landing distance. Approach and landing path requirements are stated in general terms in paragraphs (b)(2) and (4) of § 29.75. The approach path must allow smooth transition for one engine inoperative landing and for balked landing maneuvers and must allow adequate clearance from potentially hazardous HV combinations. Paragraph (b)(4)(ii) implies that a less restrictive HV envelope may exist

for the Category A approach condition in comparison to that determined under high power conditions in § 29.79. The manufacturer may elect to use this added capability. The added capability arises from the fact that lower power levels, a lower collective setting, and an established rate of descent accompany typical approach conditions as opposed to the more critical high power conditions of § 29.79. Landing distance is measured from a point 50 feet (25 feet for VTOL) above the landing surface to a stop. For flight manual purposes, the distance is from the point at which the lowest part of the rotorcraft first reaches 50 feet (25 for VTOL) to the foremost point of the rotorcraft (including rotor tip path) after coming to a stop.

(C) All engine out landing. Section 29.75(b)(5) contains the Category A certification requirement for “last” engine failure and all engine inoperative landing. The rule states that it must be possible to make a safe landing on a prepared surface after complete power failure during normal cruise. It is not intended that all engines be failed simultaneously. See paragraph AC 29.143a(2)(iii)(A) for the Category A sequential engine failure criteria. The conditions for last engine failure are maximum continuous power or 30-minute power if that rating is approved, “wings” level flight, and sudden engine failure with a pilot delay of 1 second or normal pilot recognition time, whichever is greater. Complete power failure has occurred in twin engine Category A rotorcraft. This requirement ensures that in the event of cockpit mismanagement, fuel exhaustion, improper maintenance, fuel contamination, or unforeseen mechanical failures, a safe autorotation entry can be made and a safe power-off landing can be affected. Two separate aspects of this rule are normally evaluated at different times during the test program. The last engine failure is normally evaluated during cruise or V_{NE} engine failure testing where instrumentation and critical loading have been established for those test conditions. See discussion under paragraph AC 29.143. The all engine out landing is ordinarily conducted in conjunction with an HV or Category A landing distance phase where ground instrumentation and safety equipment are available. The rotorcraft must be capable of conducting the all engine out landing at the takeoff and landing WAT limiting conditions up to the maximum altitude approved for takeoff and landing.

(ii) Procedures.

(A) Instrumentation/Equipment. Instrumentation requirements are basically the same as those for Category A takeoff. A photo theodolite, grid camera, or other position measuring equipment is needed, along with a ground station to measure wind, OAT, and humidity (if applicable). A two-way communication system between the aircraft and the position measuring equipment is essential. Aircraft instrumentation should include engine and flight parameters, control positions, power lever position, landing gear loads, and a method for synchronizing power cuts between the external light normally used for photo theodolite or camera, and onboard instrumentation. A record of rotor RPM at touchdown is necessary to assure it does not exceed transient limits. Rotor RPM at touchdown may be lower than the minimum transient limit for flight, provided stress limits are not exceeded. A crash recovery team with support of a fire engine is highly desirable.

(B) Establishing the LDP.

(1) Unless the rotorcraft is capable of hovering with one engine inoperative at the desired Category A weight, the LDP becomes largely a function of the runway length required for landing. If landing conditions to be scheduled include considerable runway length (on the order of 1,000 feet) the LDP may be defined at a relatively high speed allowing transition to a takeoff safety speed near V_Y which will allow the maximum amount of weight for compliance with the balked landing climb requirements of § 29.77(b)/§ 29.67(a)(1). In this case, the requirements of § 29.67(a)(2) usually become limiting. If the runway length is small, LDP will typically be at a lower speed and may be at a higher altitude to allow balked landing transition within the available distance. Landing weight may need to be reduced to allow landing from the lower speed or higher altitude decision point for shorter landing distances. In this case the requirements of § 29.67(a)(1) may be limiting. The climb performance and climb speeds required by § 29.67(a)(1) and (2) should be established prior to Category A landing tests.

(2) The one engine inoperative landing is similar in many respects to the height-velocity tests described in paragraph AC 29.79. Most of the comments, cautions, and techniques for HV also apply here even though typical flight conditions at LDP are less critical than limiting HV points due to a lower power level and an established rate of descent. The approach is made at a predetermined speed and one engine is made inoperative prior to LDP After the LDP, speed is reduced and the rotorcraft is flared to a conventional one engine inoperative landing. Depending on the landing characteristics and landing profile, the flare may be initiated either prior or subsequent to the 50-foot elevation utilized in determining landing distance. Testing should include an engine failure at the LDP with a 1-second pilot delay to assure safe landing capability for this critical case. A minimum of five acceptable runs for distance should be flown by the FAA/AUTHORITY pilot. These may be averaged with an equal number of acceptable runs by the company pilot.

(3) The balked landing portion of the landing profile is addressed under § 29.77, Balked Landing: Category A. For an explanation of that requirement and a discussion of those test procedures refer to paragraph AC 29.71.

(C) Power. Power should be limited to minimum specification values on the operating engine(s). This may be accomplished by adjustment of engine topping to minimum specification values for the range of atmospheric variables to be approved. This is frequently done by installing an adjustable device in the throttle linkage with a control in the cockpit so that engine topping can be accurately adjusted for varying ambient conditions. With such a device in the control system it becomes vitally important to check topping power prior to each test sequence.

(D) Aircraft Loading. Aft center of gravity is usually most critical for landing distance determination because visibility constraints limit the degree to which the pilot can flare the rotorcraft for landing. If a weight effect is shown, a minimum of

two weights should be flown at each test altitude. One weight should be the maximum weight for prevailing conditions and the other should provide a sufficient spread to validate weight accountability.

(E) Extrapolation. Weight cannot be extrapolated above test weight. See discussion under Height-Velocity Testing in paragraph AC 29.79. If no marginal areas are apparent and an acceptable analytical method is used, performance data may be extrapolated ±4,000 feet density altitude from test conditions. (See paragraph AC 29.45.)

(F) Ambient Conditions. Appropriate test limits for ambient conditions such as wind and temperature are contained in paragraph AC 29.45. Test data must be corrected for existing wind conditions during landing distance tests. Credit for headwind conditions may be given during flight manual data expansion. Paragraph AC 29.45 details allowable wind credit.

(G) All engine out landing.

(1) Several procedures can be utilized to demonstrate compliance with the all engine out landing requirement. As discussed in the explanation portion of this paragraph, § 29.75(b) contains two separate requirements. One is the ability to transition safely into autorotation after failure of the last operative engine. This requirement is discussed in paragraph AC 29.143. The second aspect of this rule requires that a landing from autorotation be possible on a prepared surface. The second requirement is discussed below. The maneuver is entered by smoothly reducing power at an optimum autorotation airspeed at a safe height above a prepared landing surface. If a complete company test program has documented an all engine out landing to the GW/σ (gross weight/density ratio) limit for takeoff and landing at each altitude, verification tests may be initiated at those limiting weight conditions. If not, buildup testing should be initiated at light weight. This test is ordinarily conducted at mid center of gravity. Typically, all altitudes may be approved with two weight limit landings: one at sea level and one near maximum takeoff and landing altitude.

(2) Demonstrated compliance with this requirement is intended to show that an autorotative descent rate can be arrested, and forward speed at touchdown can be controlled to assure a reasonable chance of survivability for the all engine failure condition. The touchdown speed (less than 40 KIAS is recommended) should be consistent with the type design limits including landing gear capability, aircraft visibility, and any other factors affecting repeatability of the maneuver. On Category A rotorcraft, rotor inertia is typically much lower than for single engine rotorcraft. RPM decays rapidly when the last engine is made inoperative. Also, due to this relatively low inertia level, considerable collective may be needed to prevent rotor overspeed conditions when the rotorcraft is flared for landing. Also, when testing final maximum weight points, the pilot should anticipate a need for considerable collective pitch to control rotor overspeed during autorotative descent, particularly at high altitude WAT limiting conditions. Some designs incorporate features which may lead to rotorcraft damage in

testing this requirement (e.g., droop stop breakage or loss of directional control with skids) if landings are conducted to a full stop with the engines cut off.

(3) The intent of this rule is to demonstrate controlled touchdown conditions and freedom from loss of control or apparent hazard to occupants when landing with all engines failed. In these cases compliance can be demonstrated by leaving throttles in the idle position and assuring no power is delivered to the drive train. Also, computer analysis may be used in conjunction with simulated in-flight checks to give reasonable assurance that an actual safe touchdown can be accomplished. Another method may be to make a power recovery after flare effectiveness of the rotorcraft has been determined. Other methods may be considered if they lead to reasonable assurance that descent can be arrested and forward speed controlled to allow safe landing with no injury to occupants when landing on a prepared surface with all engines failed. Regardless of the method(s) used to comply with this requirement, careful planning and analyses are very important due to the potentially hazardous aspects of power off simulation and landing of a Category A rotorcraft totally without power. Considerations for weight and altitude extrapolation are the same as those for HV testing (reference paragraph AC 29.79.) The all-engine-inoperative landing test is ordinarily done in conjunction with height velocity tests because ground and onboard instrumentation requirements are the same for both tests.

(H) Vertical Landings. The reader should be familiar with the preceding discussion of conventional Category A landing profiles because duplicate information is not repeated here. A typical vertical landing profile is shown in figure AC 29.75-2. This profile is equally applicable to both ground level and pinnacle sites. The profile begins at a stabilized single engine approach condition. It must be possible to make a safe OEI landing or go-around at any point prior to the LDP. At the LDP the aircraft becomes committed to landing. A safe landing must be possible in case of an engine failure at any point before or after the LDP. Testing should include a simulated failure at LDP with a 1-second delay or normal pilot response time, whichever is longer, and subsequent landing within the allowable area. The LDP is typically well above the 25-foot point from which landing distance is measured. The landing distance is the distance from the point at which the lowest portion of the rotorcraft reaches 25 feet above the landing surface to the forward-most point after coming to a stop (including main rotor tip path). The LDP becomes very important for landing on small, elevated heliports. The LDP must be clearly defined and flight manual instructions should carefully explain any pilot procedures. An illustration similar to figure AC 29.75-2 with somewhat more detailed information is most useful. Night OEI landings should be conducted to verify suitable visibility for both internal and external vertical landing cues.

c. Category B Requirements.

(1) Explanation. Section 29.75(c) contains the Category B landing requirements. For rotorcraft that do not meet the Category A powerplant installation requirements of this part, landing tests are conducted with all engines inoperative in an autorotative descent condition. Landing distance is measured from the 50-foot point to the point at which the rotorcraft is completely stopped (approximately 3 knots for water

landings). The autorotative approach speed is selected by the applicant. The landing maneuver is similar to that referred to during normal training flights as a practice autorotation. As in HV tests, care must be taken to assure no power is delivered to the rotor drive system during these tests. A small amount of power can have a significant effect on landing test results. Multiengine rotorcraft incorporating Category A engine isolation features may conduct landing distance tests with only one engine inoperative using the procedures prescribed above for Category A. For these rotorcraft the one engine inoperative condition typically results in much shorter distances due both to a much lower speed at the 50-foot point and the added power available for flaring and cushioning the landing. Instrumentation requirements are the same as those described under Category A above. Appropriate ambient conditions and allowable extrapolation are discussed under paragraph AC 29.45.

(2) Procedures. Prior to conducting these tests the crew should be familiar with the engine inoperative landing characteristics of the rotorcraft. For Category B rotorcraft without engine isolation, the flight profile may be entered in the same manner as a straight-in practice autorotation. It is recommended that for safety reasons idle power be used if a “needle split” (no engine power to the rotor) can be achieved. In some cases, a low engine idle adjustment has been set to assure needle split is attained. In other cases a temporary detent between idle and cutoff was used on the throttle. In a third case the engine was actually shut down on sample runs to verify that the engine power being delivered was not materially influencing landing capability or landing distances. The landing flare may be initiated prior to the 50-foot point. The flare is maintained as long as is reasonable to dissipate speed and build RPM. Rotor RPM must stay within allowable limits. Aft center of gravity is ordinarily critical due to visibility and flare-ability. Following the flare, the rotorcraft is allowed to touchdown in a landing attitude. Rotor RPM at touchdown should be recorded and it must be within allowable structural limits. For wheeled rotorcraft, the brakes are applied to an incipient skid for most efficient stopping. For rotorcraft on skids, the collective should be lowered as soon as characteristics allow in order to place a greater weight on the landing skids. These procedures would be appropriate flight manual entries to show how landing distances can be realized. For flight manual purposes the landing distance should include the horizontal distance from the point at which the lowest part of the rotorcraft first reaches 50 feet above the landing surface to the point at the foremost part of the rotorcraft (including rotor tip path) after coming to a stop. For Category B rotorcraft with engine isolation, the landing procedures are as described for Category A landing. When conducting Category B landings utilizing Category A “procedures,” § 29.75(b)(2) can be misleading. No transition capability to balked landing is intended for Category B rotorcraft. Section 29.77, Balked Landing, Category A, applies only to Category A rotorcraft and not to Category B rotorcraft which incorporates Category A “design” features. Five acceptable landing runs should be flown by the FAA/AUTHORITY pilot at each test weight. Results may be averaged with an equal number of company runs. If a weight effect on landing distance is to be shown, a minimum of two weight extremes are normally tested.

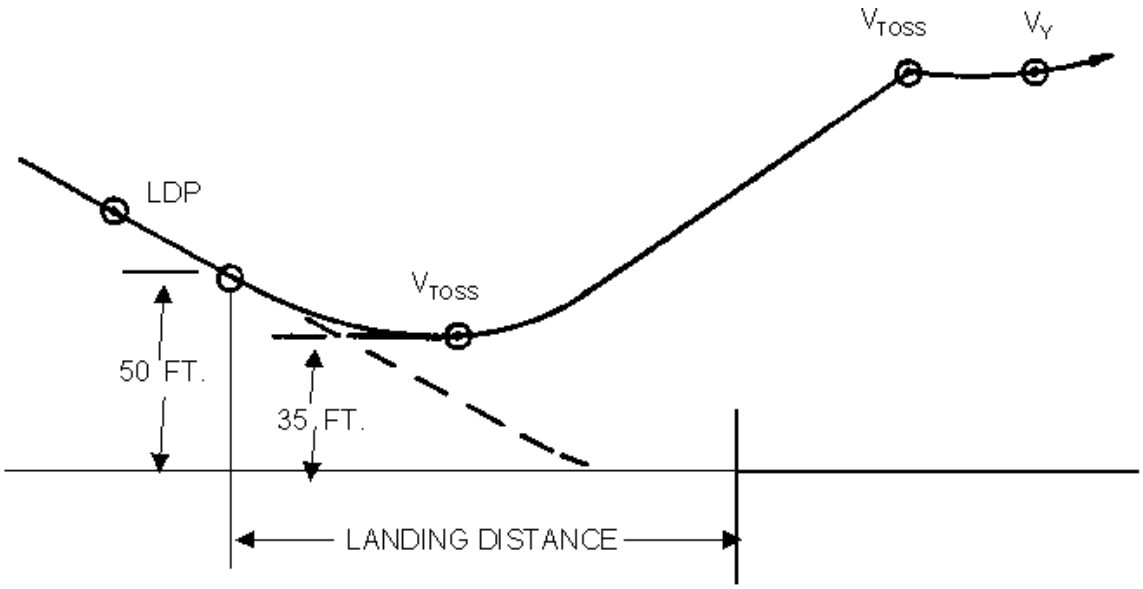

FIGURE AC 29.75-1 CATEGORY A CONVENTIONAL LANDING - CLEAR HELIPORT

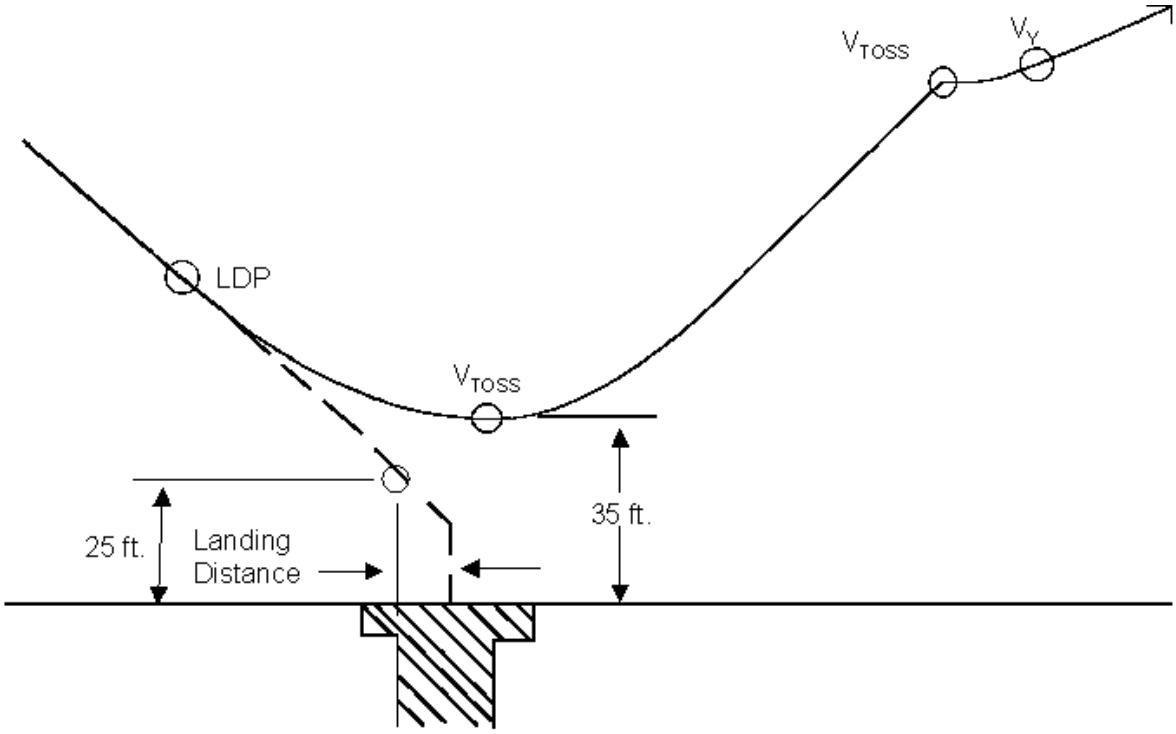

FIGURE AC 29.75-2 CATEGORY A VERTICAL LANDING

AC 29.75A. (AC's 29.77, 29.79, 29.81, & 29.83) §§ 29.75, 29.77, 29.79, 29.81, and 29.83 (Amendment 29-39) LANDING.

(For § 29.77 and § 29.79 prior to Amendment 39, see paragraphs AC 29.77 and AC 29.79 respectively.)

a. Explanation.

(1) Amendment 29-39 revised and relocated many of the landing requirements of Part 29. Changes were made to the general landing requirements of § 29.75. New requirements were added for designating a landing decision point (LDP) in § 29.77. The original § 29.79 was redesignated as a new § 29.87. Category A landing requirements were established in a new § 29.79. Requirements were added to determine landing distances in a new § 29.81. Revised Category B landing requirements were relocated from § 29.75(c) into a new § 29.83. The guidance material from paragraph AC 29.75 does not apply to rotorcraft certified with Amendment 29-39 or later.

(2) These rules incorporate all of the landing performance requirements for transport category rotorcraft. They contain the requirements for landing data, Category A landing, and Category B landing. Parallel takeoff requirements are located in eight separate sections of the rule, §§ 29.51 through 29.63. As such, to ensure that necessary subjects are treated separately, the following discussion will be separated into three parts: (a) a general discussion of basic landing distance requirements, (b) Category A requirements (including vertical landing), and (c) Category B requirements.

(3) All landing performance data are corrected to a smooth, dry, hard, level landing surface condition. As with other flight maneuvers, landings should be accomplished with acceptable flight and ground characteristics using normal pilot skills. The rule states that Category A and B landing data should be determined at each approved WAT (Weight, Altitude, Temperature) condition. Reasonable sampling and extrapolation methods are, of course, allowed. General guidance on those subjects is given in paragraph AC 29.45. As in other performance areas, engines should be operated within approved limits. Power considerations are the same as those described under paragraph b(1)(ii)(C).

(4) Unlike fixed-wing aircraft, rotorcraft typically require significantly more landing surface area with an engine inoperative than with all engines operating. Because of this characteristic, the Category A landing distance requirements are met with at least one engine inoperative to ensure the most conservative landing distance measurement is achieved.

b. Procedures - Category A Requirements.

(1) Explanation. The Category A certification concept limits landing weight to a value that will allow the rotorcraft, following an engine failure at the landing decision point (LDP), to land within the available area or to execute a balked landing descending no lower than 15 feet (or higher depending on rotorcraft geometry and performance characteristics) above the landing surface. For elevated heliports the rotorcraft may descend below the landing surface, but all parts of the rotorcraft must clear the heliport and other obstacles by not less than 15 feet. These minimum heights should be demonstrated with variations in piloting techniques and with pilot recognition and reaction times for engine failures occurring before/after LDP. See figure AC 29.75A-1.

(i) LDP. The Category A landing profile begins with an assumed engine failure at or prior to the LDP. The LDP is typically defined in terms of airspeed, rate of descent, and altitude above the landing surface. The approach path angle can be defined by LDP airspeed and rate of descent values. Definition of the LDP should include an approach angle because both the landing distance and the missed approach path are significantly influenced by landing approach angle. At any point in the single engine approach path down to and including the LDP, the pilot may elect to land or to execute a balked landing and he is assured both an adequate surface area for OEI landing and adequate climb capability for an OEI balked landing. Said another way, if an engine failure is recognized at any point down to and including the LDP, the pilot may safely elect to land or to “go-around” by executing a balked landing. The LDP should be defined to permit acceleration to V_{TOSS} clearing the landing surface by a minimum of 15 feet. The LDP represents a “commit” point for landing. Prior to the LDP in the one engine inoperative approach, the pilot has a choice, he may either land or fly away. After passing the LDP, he no longer has sufficient energy to assure transition to a balked landing condition without contacting the landing surface. If an engine failure is recognized after LDP in a normal (all engine) landing, the pilot is committed to land. The LDP and landing approach path should be defined such that critical areas of the height-velocity diagram are avoided. A typical LDP for conventional Category A profiles is 100 feet above the landing surface. LDP should be specified in terms of both actual height above the landing surface and indicated barometric altitude. Speed at the LDP should be specified in terms of indicated airspeed. The applicant may elect to develop an alternate all-engines-operating (AEO) approach procedure which meets the performance after engine failure requirements to execute a go-around before LDP or land after LDP but which could not be executed with OEI following an en route engine failure. If such alternate AEO procedures are provided, the Flight Manual should include the appropriate limitations prohibiting use of the AEO procedures after an en route engine failure. For such alternate AEO approach procedures it should be possible to execute a go-around and use the OEI approach procedure if the landing weight is consistent with such approach (the Flight Manual should indicate this OEI approach procedure and corresponding landing weight).

(ii) Landing distance. Approach and landing path requirements are stated in §§ 29.79(a)(2) and 29.83(a)(2). For Category A rotorcraft, the approach path should allow smooth transition for one-engine inoperative landing and for balked landing maneuvers. For all rotorcraft, the approach and landing paths should allow adequate

clearance from potentially hazardous HV combinations. Landing distance is measured from a point 50 feet above the landing surface to a stop. For RFM presentation, the distance is from the aft most portion of the rotorcraft at the point at which the lowest part of the rotorcraft first reaches 50 feet to the foremost point of the rotorcraft (including rotor tip path) after coming to a stop.

(iii) All Engine Out Landing. § 29.79(b) contains the Category A certification requirement for an all engine inoperative landing. The rule states that it should be possible to make a safe landing on a prepared surface after complete power failure during normal cruise. It is not intended that all engines be failed simultaneously. See paragraph AC 29.143a(2)(iii)(A) for the Category A sequential engine failure criteria. The conditions for last engine failure are maximum continuous power or 30-minute power if that rating is approved, “wings” level flight, and sudden engine failure with a pilot delay of 1 second or normal pilot recognition time, whichever is greater. Complete power failure has occurred in twin engine Category A rotorcraft. This requirement ensures that in the event of cockpit mismanagement, fuel exhaustion, improper maintenance, fuel contamination, or unforeseen mechanical failures, a safe autorotation entry can be made and a safe power-off landing can be effected. Two separate aspects of this rule are normally evaluated at different times during the test program. The last engine failure is normally evaluated during cruise or VNE engine failure testing where instrumentation and critical loading have been established for those test conditions. See discussion under paragraph AC 29.143. The all engine out landing is ordinarily conducted in conjunction with an HV or Category A landing distance phase where ground instrumentation and safety equipment are available. The rotorcraft should be capable of conducting the all engine out landing at the takeoff and landing WAT limiting conditions up to the maximum altitude approved for takeoff and landing.

(2) Procedures.

(i) Instrumentation/Equipment. Instrumentation requirements are basically the same as those for Category A takeoff. A photo theodolite, grid camera, GPS, or other position measuring equipment is needed, along with a ground station to measure wind, OAT, and humidity (if applicable). A two-way communication system between the aircraft and the position measuring equipment is essential. Aircraft instrumentation should include engine and flight parameters, control positions, power lever position, landing gear loads, and a method for synchronizing aircraft position when the power is cut with onboard instrumentation. A record of rotor RPM at touchdown is necessary to ensure it does not exceed transient limits. Rotor RPM at touchdown may be lower than the minimum transient limit for flight, provided stress limits are not exceeded. A crash recovery team with support of a fire engine is highly desirable.

(ii) Establishing the LDP.

(A) Unless the rotorcraft is capable of hovering with one engine inoperative at the desired Category A weight, the LDP becomes largely a function of the runway length required for landing. If landing conditions to be scheduled include

considerable runway length (on the order of 1,000 feet), the LDP may be defined at a relatively high speed allowing transition to a takeoff safety speed near V_Y which will allow the maximum amount of weight for compliance with the balked landing climb requirements of § 29.85(b)/§ 29.67(a)(1). In this case, the requirements of § 29.67(a)(2) usually become limiting. If the runway length is small, LDP will typically be at a lower speed and may be at a higher altitude to allow balked landing transition within the available distance. Landing weight may need to be reduced to allow landing from the lower speed or higher altitude decision point for shorter landing distances. In this case the requirements of § 29.67(a)(1) may be limiting. The climb performance and climb speeds required by § 29.67(a)(1) and (2) should be established prior to Category A landing tests.

(B) The one-engine-inoperative landing is similar in many respects to the height-velocity tests described in paragraph AC 29.79. Most of the comments, cautions, and techniques for HV also apply here even though typical flight conditions at LDP are less critical than limiting HV points due to a lower power level and an established rate of descent. The approach is made at a predetermined speed and one engine is made inoperative prior to LDP. After the LDP, speed is reduced and the rotorcraft is flared to a conventional one engine inoperative landing. Depending on the landing characteristics and landing profile, the flare may be initiated either prior or subsequent to the 50 foot elevation utilized in determining landing distance. Testing should include an engine failure such that recognition is at the LDP with a 1-second pilot delay to ensure safe landing capability for this critical case. A sufficient number of acceptable runs should be accomplished to provide confidence in the results. Typically ten acceptable runs are adequate.

(C) The balked landing portion of the landing profile is addressed under § 29.85, Balked Landing: Category A. For an explanation of that requirement and a discussion of those test procedures, refer to paragraph AC 29.77.

(iii) Power. Power should be limited to minimum specification values on the operating engine(s). This may be accomplished by adjustment of engine topping to minimum specification values for the range of atmospheric variables to be approved. This is frequently done by installing an adjustable device in the throttle linkage with a control in the cockpit so that engine topping can be accurately adjusted for varying ambient conditions. With such a device in the control system, it becomes vitally important to check topping power prior to each test sequence.

(iv) Aircraft Loading. Aft center of gravity is usually most critical for landing distance determination because visibility constraints limit the degree to which the pilot can flare the rotorcraft for landing. If a weight effect is shown, a minimum of two weights should be flown at each test altitude. One weight should be the maximum weight for prevailing conditions and the other should provide a sufficient spread to validate weight accountability.

(v) Extrapolation. Landing data may be extrapolated along an established W/σ line to the maximum gross weight of the rotorcraft. However, extrapolation will not be considered valid if landing gear loads are marginally acceptable at actual landing weights below the W/σ limit. If no marginal areas are apparent and an acceptable analytical method is used, performance data may be extrapolated up to 4,000 feet density altitude from test conditions. (See paragraph AC 29.45.)

(vi) Ambient Conditions. Appropriate test limits for ambient conditions such as wind and temperature are contained in paragraph AC 29.45. Test data should be corrected for existing wind conditions during landing distance tests. Credit for headwind conditions may be given during flight manual data expansion. Paragraph AC 29.1587 details allowable wind credit.

(vii) All Engine Out Landing.

(A) Several procedures can be utilized to demonstrate compliance with the all-engine-out landing requirement. As discussed in the explanation portion of this paragraph, §§ 29.79 and 29.83 each require that a landing from autorotation be possible. The maneuver is entered by smoothly reducing power at an optimum autorotation airspeed at a safe height above the landing surface. All-engine-out landing tests should be initiated at light weight with a gradual buildup to the limiting weight conditions. If a complete company test program has documented all-engine-out landings to the GW/σ limit, the buildup conditions during verification test may be decreased. If not, buildup testing should be initiated at light weight. This test is ordinarily conducted at mid center of gravity. Typically, all altitudes may be approved with two weight limit landings - one at sea level and one near maximum takeoff and landing altitude.

(B) Demonstrated compliance with this requirement is intended to show that an autorotative descent rate can be arrested, and forward speed at touchdown can be controlled to a reasonable value (less than 40 KTAS is recommended) to ensure a reasonable chance of survivability for the all engine failure condition. On multiengine rotorcraft, rotor inertia is typically lower than for single-engine rotorcraft. RPM decays rapidly when the last engine is made inoperative. Due to this relatively low inertia level, considerable collective may be needed to prevent rotor overspeed conditions when the rotorcraft is flared for landing. Also, when testing the final maximum weight points, the pilot should anticipate a need for considerable collective pitch to control rotor overspeed during autorotative descent, particularly at high altitude WAT limiting conditions. Some designs incorporate features which may lead to rotorcraft damage in testing this requirement (e.g., droop stop breakage or loss of directional control with skids) if landings are conducted to a full stop with the engines cut off.

(C) The intent of this rule is to demonstrate controlled touchdown conditions and freedom from loss of control or apparent hazard to occupants when landing with all engines failed. In these cases compliance can be demonstrated by leaving throttles in the idle position and ensuring no power is delivered to the drive train.

Also, computer analysis may be used in conjunction with simulated in-flight checks to give reasonable assurance that an actual safe touchdown can be accomplished. Another method may be to make a power recovery after flare effectiveness of the rotorcraft has been determined. Other methods may be considered if they lead to reasonable assurance that descent can be arrested and forward speed controlled to allow safe landing with no injury to occupants when landing on a prepared surface with all engines failed. Regardless of the method(s) used to comply with this requirement, careful planning and analyses are very important due to the potentially hazardous aspects of power off simulation and landing of a multiengine rotorcraft totally without power. Considerations for weight and altitude extrapolation are the same as those for HV testing (see paragraph AC 29.79). The all-engine-inoperative landing test is ordinarily done in conjunction with height velocity tests because ground and onboard instrumentation requirements are the same for both tests.

(D) Prior to conducting these tests, the crew should be familiar with the engine inoperative landing characteristics of the rotorcraft. The flight profile may be entered in the same manner as a straight-in practice autorotation. It is recommended that for safety reasons idle power be used if a “needle split” (no engine power to the rotor) can be achieved. In some cases, a low engine idle adjustment has been set to assure needle split is attained. In other cases, a temporary detent between idle and cutoff was used on the throttle. In a third case, the engine was actually shut down on sample runs to verify that the engine power being delivered was not materially influencing landing capability or landing distances. The flare is maintained as long as is reasonable to dissipate speed and build RPM. Rotor RPM should stay with allowable limits. Aft center of gravity is ordinarily critical due to visibility and flare-ability. Following the flare, the rotorcraft is allowed to touch down in a landing attitude. Rotor RPM at touchdown should be recorded, and it should be within allowable structural limits.

(viii) Vertical Landings. The reader should be familiar with the preceding discussion of conventional Category A, landing profiles because duplicate information is not repeated here. A typical vertical landing profile is shown in figure AC 29.75A-2. This profile is equally applicable to both ground level and elevated heliport sites. The profile begins at a stabilized single engine approach condition. It should be possible to make a safe OEI landing or go-around at any point prior to the LDP unless alternate AEO approach procedures are presented in the Flight Manual according to paragraph AC 29.75b(1)(i)(A). It is possible to have two landing techniques: an “offset” one, which schedules drop down for elevated heliports (but still ensure 15 feet radial deck edge clearance), and a “straight in” approach which utilizes the ground level heliport criteria. These techniques should be stipulated as such in the Flight Manual. At the LDP the aircraft becomes committed to landing. A safe landing should be possible in case of an engine failure at any point before or after the LDP. Testing should include a simulated failure at LDP with a 1-second delay or normal pilot response time, whichever is longer, and subsequent landing within the allowable area. The landing distance is the distance from the point at which the lowest portion of the rotorcraft reaches 50 feet above the landing surface to the forward-most point after coming to a

stop (including main rotor tip path). The LDP becomes very important for landing on small, elevated heliports. The LDP should be clearly defined and Flight Manual instructions should carefully explain any pilot procedures. An illustration similar to figure AC 29.75A-2 with somewhat more detailed information is most useful. Night OEI landings should be conducted to verify suitable visibility for both internal and external vertical landing cues. The minimum elevated heliport size demonstrated for the OEI approach procedure and for alternate AEO approach procedures (when provided) should also be provided in the Flight Manual.

c. Category B Requirements.

(1) Explanation. Section 29.83 contains the Category B landing requirements. Landing distance is measured from the 50-foot point to the point at which the rotorcraft is completely stopped (approximately 3 knots for water landings). The approach speed is selected by the applicant. Appropriate ambient conditions and allowable extrapolation are discussed under paragraph AC 29.45.

(2) Procedures.

(i) Landing Distance. Aft center of gravity is ordinarily critical due to field-of-view and flare ability. For wheeled rotorcraft, the brakes are applied to an incipient skid for most efficient stopping. For rotorcraft on skids, the collective should be lowered as soon as characteristics allow in order to place a greater weight on the landing skids. These procedures would be appropriate flight manual entries to show how landing distances can be realized. For flight manual purposes, the landing distance should include the horizontal distance from the point at which the lowest part of the rotorcraft first reaches 50 feet above the landing surface to the point at the foremost part of the rotorcraft (including rotor tip path) after coming to a stop. Multiengine rotorcraft incorporating Category A engine isolation features may elect to show compliance with § 29.79 and § 29.81. A sufficient number of acceptable runs should be accomplished to provide confidence in the results. Typically ten acceptable runs are adequate. If a weight effect on landing distance is to be shown, a minimum of two weight extremes are normally tested.

(ii) All-Engine-Out Landing.

(A) Several procedures can be utilized to demonstrate compliance with the all-engine-out landing requirement. Section 29.83(c) requires that a landing from autorotation be possible. The maneuver is entered by smoothly reducing power at an optimum autorotation airspeed at a safe height above the landing surface. All-engine-out landing tests should be initiated at light weight with a gradual buildup to the limiting weight conditions. If a complete company test program has documented all-engine-out landings to the GW/σ limit, the buildup conditions during verification test may be decreased. This test is ordinarily conducted at mid center of gravity. Typically, all altitudes may be approved with two weight limit landings - one at sea level and one near maximum takeoff and landing altitude.

(B) Demonstrated compliance with this requirement is intended to show that an autorotative descent rate can be arrested, and forward speed at touchdown can be controlled to a reasonable value (less than 40 KTAS is recommended) to ensure a reasonable chance of survivability for the all engine failure condition. On multiengine rotorcraft, rotor inertia is typically lower than for single-engine rotorcraft. RPM decays rapidly when the last engine is made inoperative. Due to low rotor inertia, considerable collective may be needed to prevent rotor overspeed conditions when the rotorcraft is flared for landing. Also, when testing the final maximum weight points, the pilot should anticipate a need for considerable collective pitch to control rotor overspeed during autorotative descent, particularly at high altitude WAT limiting conditions.

(C) The intent of this rule is to demonstrate controlled touchdown conditions and freedom from loss of control or apparent hazard to occupants when landing with all engines failed. In these cases compliance can be demonstrated by leaving throttles in the idle position and ensuring no power is delivered to the drive train. Also, computer analysis may be used in conjunction with simulated in-flight checks to give reasonable assurance that an actual safe touchdown can be accomplished. Another method may be to make a power recovery after flare effectiveness of the rotorcraft has been determined. Other methods may be considered if they lead to reasonable assurance that descent can be arrested and forward speed controlled to allow safe landing with no injury to occupants when landing on a prepared surface with all engines failed. Regardless of the method(s) used to comply with this requirement, careful planning and analyses are very important due to the potentially hazardous aspects of power off simulation and landing of a multiengine rotorcraft totally without power. Considerations for weight and altitude extrapolation are the same as those for HV testing (see paragraph AC 29.79). The all-engine-inoperative landing test is ordinarily done in conjunction with height velocity tests because ground and onboard instrumentation requirements are the same for both tests.

(D) Prior to conducting these tests, the crew should be familiar with the engine inoperative landing characteristics of the rotorcraft. The flight profile may be entered in the same manner as a straight-in practice autorotation. It is recommended that for safety reasons idle power be used if a “needle split” (no engine power to the rotor) can be achieved. In some cases, a low engine idle adjustment has been set to assure needle split is attained. In other cases, a temporary detent between idle and cutoff was used on the throttle. In a third case, the engine was actually shut down on sample runs to verify that the engine power being delivered as not materially influencing landing capability or landing distances. The flare is maintained as long as is reasonable to dissipate speed and build RPM. Rotor RPM should stay with allowable limits. Aft center of gravity is ordinarily critical due to visibility and flareability. Following the flare, the rotorcraft is allowed to touch down in a landing attitude. Rotor RPM at touchdown should be recorded, and it should be within allowable structural limits.

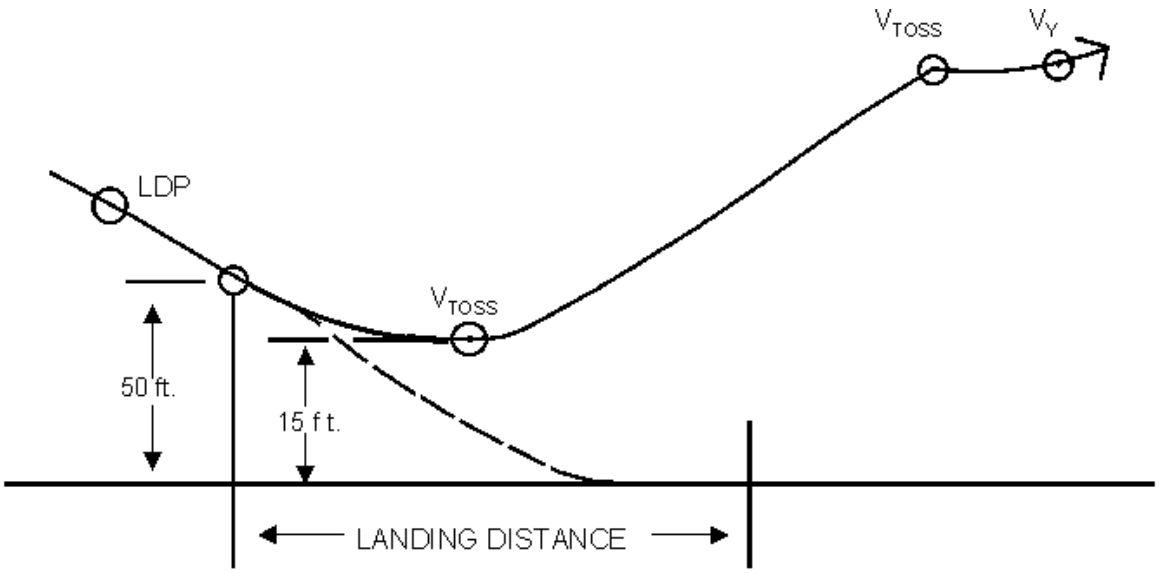

FIGURE AC 29.75A-1 CATEGORY A CONVENTIONAL LANDING - CLEAR HELIPORT

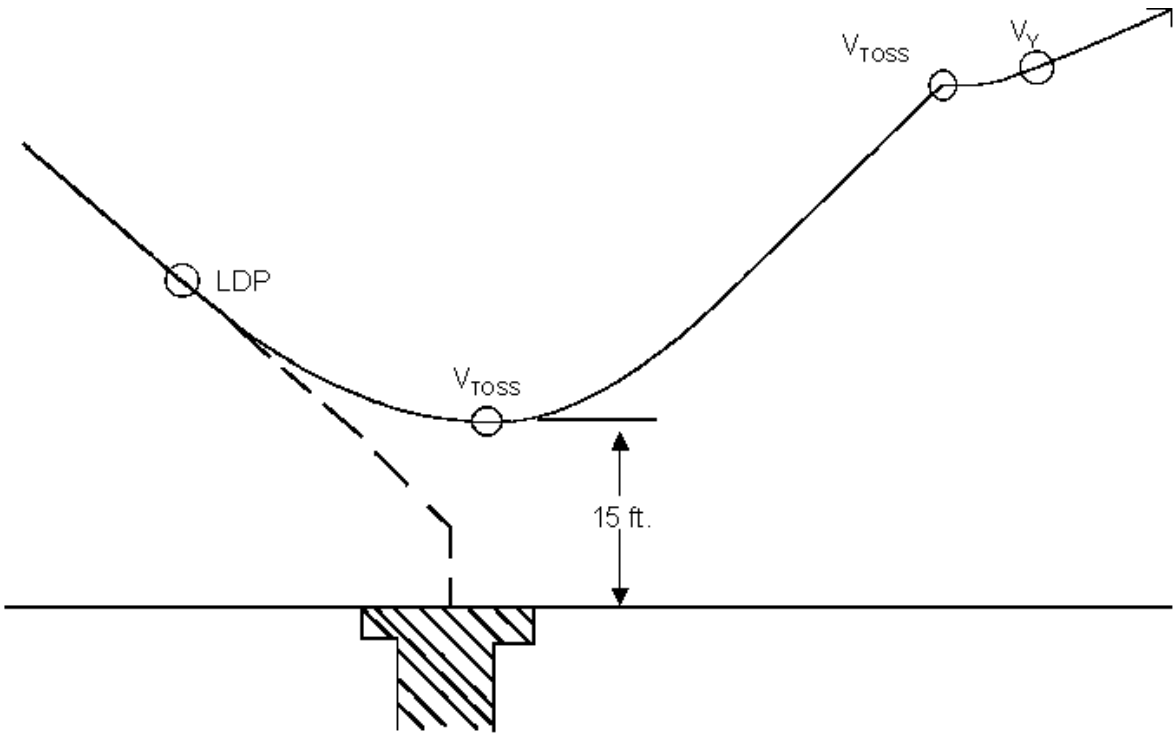

FIGURE AC 29.75A-2 CATEGORY A VERTICAL LANDING

AC 29.77. § 29.77 (Amendment 29-24) BALKED LANDING: CATEGORY A

(For § 29.77 after Amendment 38, see paragraph AC 29.75A)

a. Explanation. This rule has two distinct portions.

(1) Section 29.77(a) states that the rotorcraft must be capable of transitioning smoothly from each approved Category A approach condition to a missed approach with one engine inoperative (OEI). Although not specifically stated in the rule, this requirement must be met for any point prior to the landing decision point (LDP).

(2) Section 29.77(b) requires that the LDP be defined so that it will permit transition to a safe climb condition in the event a balked landing is necessary. (See figure AC 29.75-1.) The safe climb conditions are defined in § 29.67(a)(1) and (2). This suggests establishing a clearly defined balked landing profile similar to the Category A takeoff profile established under § 29.59. The balked landing profile must insure compliance with the climb performance requirements of §§ 29.67(a)(1) and 29.67(a)(2).

b. Procedures.

(1) Instrumentation. Instrumentation requirements are similar to those for Category A takeoff. A ground station with positioning capability is needed along with on-board instrumentation of engine and flight parameters.

(2) Balked Landing Profiles. One engine inoperative balked landing profiles during approach must be conducted at conditions up to and including the LDP. The LDP should be designated so that the balked landing profile may be completed with the rotorcraft descending no lower than 35 feet above the landing surface. The distance from the LDP to the point in the balked landing profile at which a minimum of 35 feet above the landing surface is attained at V_{TOSS} in a climbing posture should be recorded. This distance should be compared against the landing distance determined under § 29.81 to assure the balked landing maneuver can be completed within the designated landing area. This is especially important for future steep angle, low speed Category A approaches to heliports.

(3) Handling Qualities. Handling qualities features in the balked landing transition should be carefully evaluated. Characteristics such as excessive nose down pitching with power application or excessive engine lag should not be approved.

(4) Climb Performance. In accordance with this rule, the climb requirements of § 29.67(a)(1) and (2) must also be met in the event a balked landing is made. See paragraphs AC 29.65 and AC 29.67.

AC 29.79. § 29.79 (Amendment 29-21) LIMITING HEIGHT-SPEED ENVELOPE.

(For § 29.79 after Amendment 29-38, see paragraph AC 29.75A)

a. Explanation.

(1) The height-speed envelope is normally referred to as the height-velocity (HV) diagram. It defines an envelope of airspeed and height above the ground from which a safe power-off or OEI landing cannot be made. The diagram normally consists of three portions: (a) the level flight (cruise) portion, (b) the takeoff portion, and (c) the high speed portion. See figure AC 29.79-1. The high speed portion is omitted on occasions when it can be shown that the rotorcraft can suffer an engine failure at low altitude and high speed (up to V_H) and make a successful landing, or climb out on the remaining engine(s).

(2) Engine power considerations are similar to those in previous takeoff and landing requirements, paragraphs AC 29.53, AC 29.63, and AC 29.75.

(3) The prohibited sections of the HV diagram are separated by the takeoff corridor. This corridor should be wide enough to consistently permit a takeoff flight path clear of the HV diagram using normal pilot skill. The takeoff corridor should always permit a minimum of $\pm$ 5 knots clearance from critical portions of the diagram.

(4) The knee of the curve separates the takeoff portion from the cruise portion and is defined as the highest speed point on the low speed portion of the HV envelope. Altitudes above this point are considered cruise, or “fly-in,” points and these test points require a minimum time delay of 1-second between throttle chop and control actuation (reference § 29.143(d)). Altitudes below the knee represent takeoff profile points. For test points in the takeoff portion, takeoff power (or a lower power selected by the applicant as an operating limitation), and normal pilot reaction time will be used.

(5) Since the HV diagram may represent the limiting capabilities of the rotorcraft, each test point should be approached with caution. The manufacturer’s buildup program should be reviewed to determine the amount of conservatism in the HV diagram (if any). It should be remembered that the operational pilot will be operating at or near the HV diagram without the benefit of a buildup program. Buildup testing is necessary, and it is most important to vary only one parameter at a time to prevent surprises. Light weight testing is ordinarily conducted first. High and low hover points are approached from above and below respectively. Portions near the knee are initially evaluated at high speed with subsequent backing down of the speed. In most rotorcraft the effective flare airspeed is critical. At airspeeds slightly below this value, the ability to arrest and control descent rates through use of an aft cyclic flare may be greatly diminished. Extreme care should be exercised when “backing down” to lower speeds.

(6) In addition to the on-board and ground instrumentation, a motion picture camera or other position measuring equipment should cover each run.

(7) For FAA/AUTHORITY tests, the minimum required crew and minimum instrument panel display should be used. Ground safety equipment should be provided.

(8) This test is the least predictable of all the performance items. Therefore, the expansion and extrapolation of test data are questionable. Weight may not be extrapolated to higher values. In order to extrapolate HV data to higher altitudes, any analytical method must have FAA/AUTHORITY approval. In lieu of pure analytical methods, simulations have been used successfully, especially for multiengine rotorcraft. In either case, the maximum allowable extrapolation should be limited to 2,000 feet density altitude (H_D). HV test weights should be consistent with the takeoff and landing WAT (weight, altitude, temperature) limit curve which will be placed in the Rotorcraft Flight Manual. For a given diagram, typical weight reductions that are necessary as altitude is increased can be conservatively estimated by maintaining a constant gross weight divided by density ratio, GW/σ. See figure AC 29.79-2, Part A. If weight is not varied, an enlarged HV diagram is required for safe power-off landing as density altitude is increased. See figure AC 29.79-2, Part B. Another method of presentation is to show varying weights at a constant density altitude. (See figure AC 29.79-2, Part C.)

(9) Vertical takeoff and landing (VTOL) testing normally does not require separate HV testing. The takeoff and landing tests take on the combined characteristics of takeoff, landing, and HV tests.

(10) Rotorcraft certificated prior to Amendment 29-21 were required to have the resulting height-velocity diagram as an operating limitation. This limitation restricted opportunities when operating large rotorcraft in various utility applications. Subsequently, Amendment 29-21 allows, under certain conditions, the height-velocity diagram to be placed in the Flight Manual Performance Information Section instead of the Limitations Section. Specifically, the rotorcraft must be: (1) certificated for a maximum gross weight of 20,000 pounds or less; (2) configured with nine passenger seats or less; and (3) certificated in Category B. Testing must be completed with the aircraft at the maximum gross weight at sea level. For altitudes above sea level, the test aircraft must be at a weight no less than the highest weight the rotorcraft can hover out-of-ground-effect (OGE). Rotorcraft certificated prior to Amendment 29-21 can update their certification basis to take advantage of this provision.

b. Procedures.

(1) Instrumentation.

(i) Ground Station. The ground station must have equipment and instrumentation to determine wind direction and velocity, outside air temperature, and (if the test rotorcraft has reciprocating engines), humidity. Since the tests must be conducted in winds of 2 knots or less, a smoke generator is highly recommended to show both flightcrew and ground crew personnel the wind direction and velocity at any given time. Additionally, the location of the ground station should be such that it is free

of rotor downwash at all times. Motion picture, phototheodolite, and radio equipment will be necessary to properly conduct the test program. The use of telemetry equipment is desirable if the location of the test site and the magnitude of the test program make it practical.

(ii) Airborne Equipment (Test Rotorcraft). Necessary installed test equipment may include photo panels and/or recorders for recording engine parameters, control positions, landing gear loads, landing gear deflections, airspeed, altitude, and other variables. An external light attached to the rotorcraft (or any other means of identifying the engine failure point to the ground camera or phototheodolite) is needed to identify the exact time of engine failure and may also be used to synchronize the ground recorder with the airborne recorded data.

(2) Analytical Prediction. The HV diagram can be estimated by analytical means and this is recommended prior to test. HV, however, is the least predictable of all rotorcraft performance and because of this, the expansion and extrapolation of test data must be done with great care. Test weight may not be extrapolated. All test points should be approached conservatively with some speed or altitude margin. If the manufacturer has conducted a comprehensive HV flight test program to validate his analytical predictions, much preliminary testing can be eliminated. In any case, the maximum allowable extrapolation from flight test conditions is 2,000 feet density altitude and an approved analytical and/or simulation method must be utilized for extrapolation.

(3) Power.

(i) The appropriate power level before engine failure for the low and high hover points is simply the power required to hover at the prevailing hover conditions. The appropriate power condition prior to failure of the engine for points below the knee is takeoff power or a lower value if approved as an operating limit. For cruise or “fly-in” points above the knee, the appropriate condition is power required for level flight. Rotor speed at execution of the engine failure should be the minimum speed appropriate to the flight condition.

(ii) The applicable power failure conditions are listed in § 29.79(b). Power should be completely cut for normal Category B rotorcraft. For Category A rotorcraft, the desired topping power (for the remaining engine(s)) should be set prior to the test. This power value will need adjustment as ambient conditions change. The power can be takeoff power (TOP), 2 1/2-minute power, or some calculated lower power for simulating hot day or higher density altitude conditions. Power is verified and recorded by the pilot by “topping” the engine(s) prior to engine failure tests. Care must be taken to assure that this power value is no more than that which would be delivered by a minimum specification engine under the ambient conditions to be approved.

(4) Test Loadings. Weight extrapolation is not permitted for HV. Therefore, the test weight must be closely controlled. Ballast or fuel should be added frequently to maintain the weight within -1 to +5 percent when testing final points. Ordinarily tests are

conducted at a mid center of gravity unless a particular loading is expected to be particularly critical.

(5) Landing Gear Loads.

(i) Instrumented landing gear can be a great help in evaluating test results. This information can be telemetered to a ground station or otherwise recorded and displayed for direct reference following each landing.

(ii) Any landing which results in permanent deformation of aircraft structure or landing gear beyond allowable maintenance limits is considered an unsatisfactory test point.

(6) Piloting Considerations. In verifying the HV diagram, the minimum required instrument panel display and minimum crew should be used in order not to mislead the operational pilot who has no test equipment available and may have no copilot to assist. Three distinctly different flight profiles are utilized in developing the diagram.

(i) High Hover. A stabilized out-of-ground-effect (OGE) hover condition prior to power failure is essential. A minimum 1-second time delay between power failure and initial control actuation is utilized. Following the time delay, the primary concern is to quickly lower collective and to gain sufficient airspeed to allow an effective flare approaching touchdown. While the immediate development of airspeed is necessary, the dive angle must be reasonable and must be representative of that expected in service. While initial aircraft attitude will vary between models and with changing conditions, 10°-20° has been previously applied as a maximum allowable nose down pitch attitude. Use of greater attitudes could result in a diagram which is difficult to achieve and unrealistic for operations in service. Initial testing should start relatively high with gradual lowering of height to the final high hover altitude. A stabilized OGE hover condition prior to power failure is essential. If a stabilized high hover condition cannot be achieved prior to the engine cut, then this point should be tested from a minimum level flight speed. This will result in an open-ended HV diagram. A smoke source or balloon on a long cord is highly desirable since the wind can vary significantly from surface observations to typical high hover altitudes. Vertical speed must be very near zero at the throttle chop. Any climb or sink rate can have a significant influence on the success of the test point. Use of a radar altimeter with a cross check to barometric altitude is essential.

(ii) Low Hover. From the low hover position there is no flare capability and little time for collective reaction. No time delay is applied other than normal pilot reaction. For typical designs the collective may not be lowered after power failure. Lowering of the collective is not permitted because it is not a pilot action which could be expected if an engine failed without notice during a hovering condition in service. Initial lowering of collective immediately after power failure can result in very high, unconservative low hover altitudes that are unrealistic for operational conditions. If, however, a design is such that a 1-second pilot delay after power failure could be

achieved without any appreciable descent, a slight lowering of collective could be allowed.

(iii) Takeoff Corridor. Normal pilot reaction is applied when the engine is made inoperative. At low speeds collective may be lowered quickly to retain RPM and minimize the time between power failure and ground contact. If airspeed is sufficient for an effective flare, the aircraft is flared to reduce airspeed, retain rotor RPM, and control vertical speed prior to touchdown. Considerable surface area may be needed for a sliding or rolling stop.

(iv) Additional Considerations. The “in-between” points utilize similar techniques. The cruise or “fly-in” points are similar to the high hover point although the steep initial pitch attitudes are not needed as altitude is decreased and airspeed is increased along the curve. The low speed points along the takeoff corridor are similar to the low hover point except that the collective may be quickly lowered and some flare capability may be used as the “knee” is approached. The pilot should be proficient in all normal autorotation landings before conducting HV tests in a single-engine rotorcraft.

(7) Ground Support. Motion picture or theodolite coverage and ground safety equipment are necessary. Communication capability among these elements should be provided. Use of a phototheodolite to compare height/speed with cockpit observations is very desirable.

(8) Verifying the HV Diagram.

(i) A sufficient number of test points must be flown to verify the diagram. The key areas are the knee, high altitude hover, low altitude hover, and high speed touchdown. Test points with excessive gear loads, above average skill requirements, winds above permissible levels, rotor droop below approved minimum transient RPM, damage to the rotorcraft, excessive power, incorrect time delay, etc., cannot be accepted.

(ii) After the HV diagram is defined, it should be ascertained that the corridor permits takeoffs within ±5 knots of the recommended takeoff profile.

(9) Flight Manual. The flight manual should list any procedures which may apply to specific points (e.g., high speed points) and test conditions, such as runway surface, wave height for amphibious tests, marginal areas of controllability or landing gear response, etc. The HV curve should be presented in the RFM using actual altitude above ground level and indicated airspeed.

(10) Night Evaluation. If a rotorcraft is to be certified for night operation, a night evaluation is required. Engine failures should be conducted along the recommended takeoff path. Landings should also be qualitatively evaluated with an engine failed. Engine failures at critical HV conditions are not required. The intent is to show

adequate visibility using aircraft and/or runway lights without requiring a duplication of the daytime HV test program. See related discussion under paragraph AC 29.63.

(11) Water Landings. For amphibious float equipped rotorcraft, day and night water landings should be conducted under critical loading conditions with an engine failed. Engine failures should be conducted along the recommended takeoff path. Engine failures at critical HV conditions are not required. The intent is to show similarity to test results over land without requiring a duplication of the HV test program.

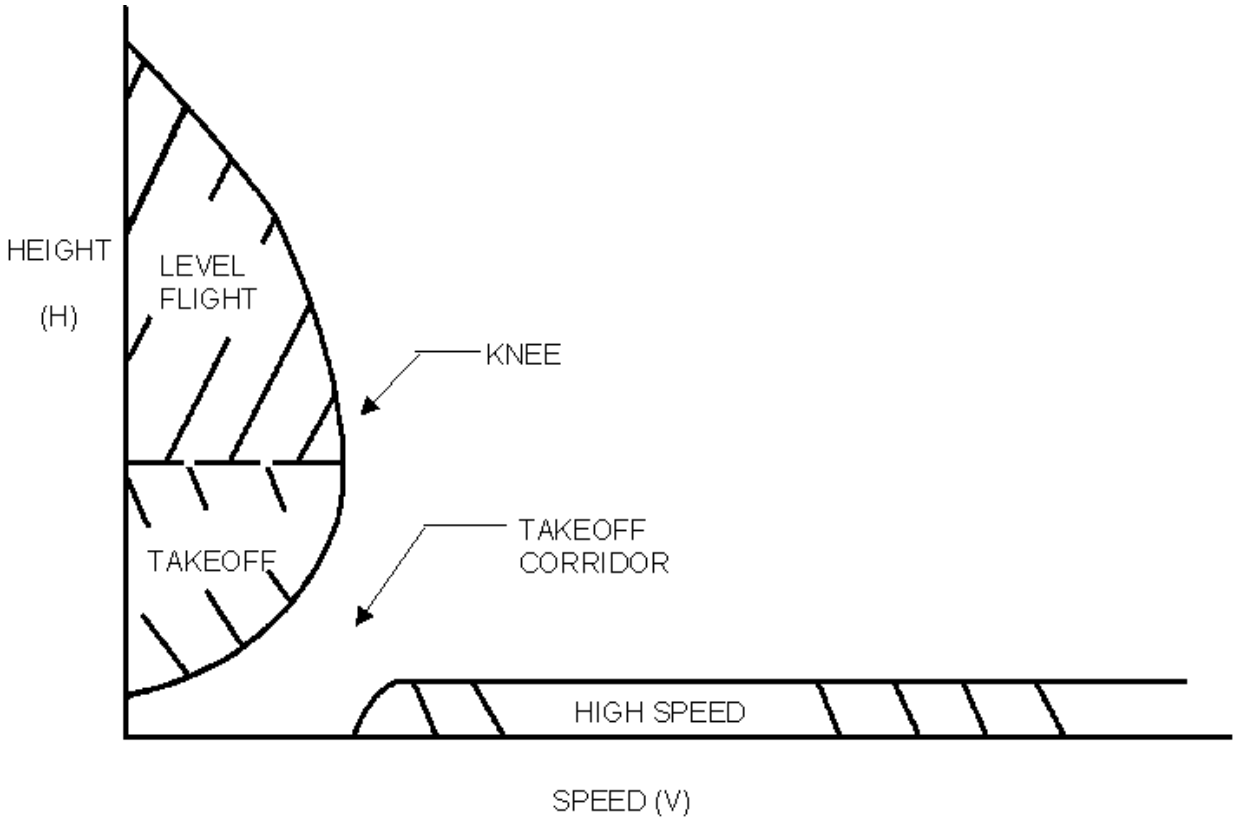

FIGURE AC 29.79-1 HEIGHT - VELOCITY DIAGRAM

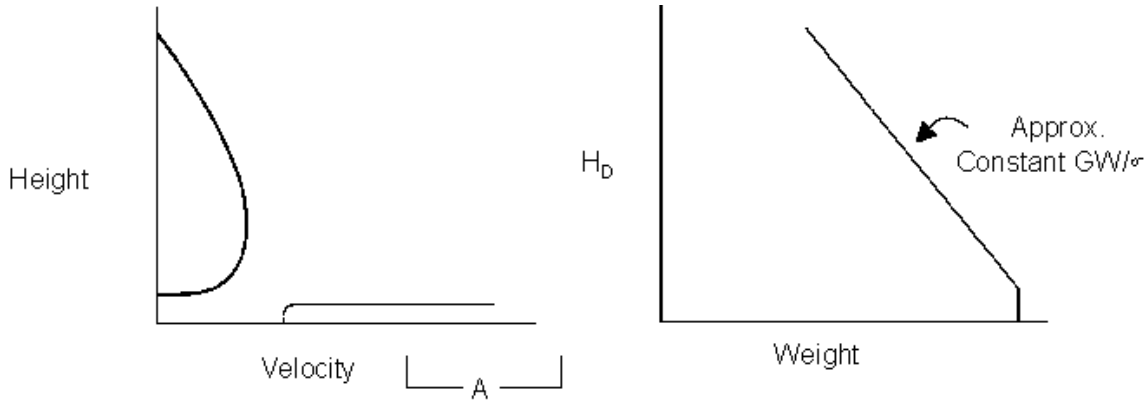

CONSTANT HV DIAGRAM, VARIABLE WEIGHT

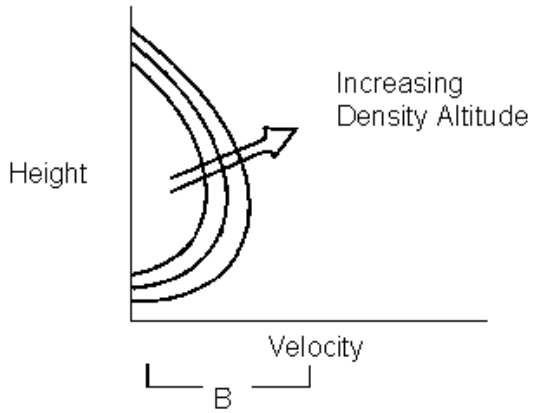

CONSTANT WEIGHT

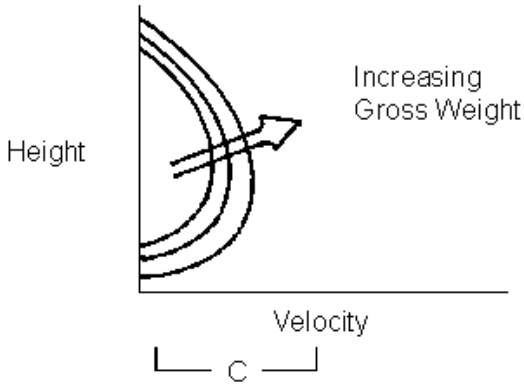

CONSTANT DENSITY ALTITUDE

FIGURE AC 29.79-2 ALTITUDE/WEIGHT ACCOUNTABILITY

AC 29.85. § 29.85 (Amendment 29-39) BALKED LANDING: CATEGORY A

(For Balked Landing prior to Amendment 39, see § 29.77 and paragraph AC 29.77.)

a. Explanation. Amendment 29-39 revised and relocated the original § 29.77 as a new § 29.85. The guidance material of paragraph AC 29.77 does not apply to rotorcraft certified with Amendment 29-39 or later. This rule has two distinct portions.

(1) Section 29.85(a) states that the rotorcraft must be capable of transitioning smoothly from each approved Category A approach condition to a missed approach with one engine inoperative (OEI). Although not specifically stated in the rule, this requirement must be met for any point prior to the landing decision point (LDP).

(2) Section 29.85(b) requires that the LDP be defined so that it will permit transition to a safe climb condition in the event a balked landing is necessary. (See figure AC 29.75A-1.) The safe climb conditions are defined in § 29.67(a)(1) and (2). A clearly defined balked landing profile similar to the Category A takeoff profile should be established. The balked landing profile must insure compliance with the climb performance requirements of §§ 29.67(a)(1) and 29.67(a)(2).

b. Procedures.

(1) Instrumentation. Instrumentation requirements are similar to those for Category A takeoff. A ground station with positioning capability is needed along with on-board instrumentation of engine and flight parameters.

(2) Balked Landing Profiles. One engine inoperative balked landing profiles during approach must be conducted at conditions down to and including the LDP. The LDP should be designated so that the balked landing profile may be completed with the rotorcraft clearing the landing surface by a minimum of 15 feet. Fifteen feet should be considered the absolute minimum clearance allowed with greater clearances required for some rotorcraft dependent on rotorcraft geometry and performance characteristics. For elevated or ground level heliports, with significantly lower LDP heights than 100 feet, the minimum clearance is 15 feet vertically and radially. These minimum heights would need to be demonstrated with variations in piloting techniques and with pilot recognition and reaction times for engine failures occurring before/after LDP. The distance from the LDP to the point in the balked landing profile at which a minimum of 35 feet above the landing surface is attained at V_{TOSS} in a climbing posture should be recorded. This distance should be compared against the landing distance determined under § 29.81 to assure the balked landing maneuver can be completed within the designated landing area. This is especially important for future steep angle, low speed Category A approaches to heliports.

(3) Handling Qualities. Handling qualities features in the balked landing transition should be carefully evaluated. Characteristics such as excessive nose down pitching with power application or excessive engine lag should not be approved.

(4) Climb Performance. In accordance with this rule, the climb requirements of § 29.67(a)(1) and (2) must also be met in the event a balked landing is made. See paragraphs AC 29.65 and AC 29.67.

AC 29.87. § 29.87 (Amendment 29-39) LIMITING HEIGHT-SPEED ENVELOPE.

(For Limiting Height-Speed Envelope prior to Amendment 39, see § 29.79 and paragraph AC 29.79.)

a. Explanation. Amendment 39 redesignated § 29.79 as § 29.87.

b. Procedures. The guidance material presented in paragraph AC 29.79 continues to apply.

SUBPART B - FLIGHT

FLIGHT CHARACTERISTICS

AC 29.141. § 29.141 (Amendment 29-24) FLIGHT CHARACTERISTICS - GENERAL.

a. Explanation.

(1) This regulation prescribes the general flight characteristics required for certification of a transport category rotorcraft. Specifically, it states that the rotorcraft shall comply with the flight characteristics requirements at all approved operating altitudes, gross weights, center of gravity locations, airspeeds, power, and rotor speed conditions for which certification is requested. The reference to “altitude” in § 29.141(a)(1) refers to “density altitude.” Density altitude is, of course, a function of pressure altitude and ambient temperature, hence the need to account for ambient temperature effects. Additional flight characteristics required for instrument flight are contained in AC 29 Appendix B.

(2) Generally the aircraft structural (load level) survey accounts for takeoff power values at speeds up to and including V_Y. At speeds above V_Y, maximum continuous power is assumed. Stress to rotating components usually increases with airspeed and power. If the takeoff power rating exceeds the maximum continuous power rating, and the structural survey has been conducted under the assumption that takeoff power is not used at speeds above V_Y, the Rotorcraft Flight Manual must limit takeoff power to speeds of V_Y and below. If takeoff power is structurally substantiated throughout the flight envelope, and appropriate portions of the controllability, maneuverability, and trim requirements of §§ 29.141 through 29.161 are met at takeoff power levels, no flight manual entry is needed. Obviously, if transmission limits for MC and takeoff power are coincident, no special action is needed.

(3) During the flight characteristics testing, the controls must be rigged in accordance with the approved rigging instructions and tolerances. The control system rigging must be known prior to testing. In addition to the normal rigging procedures, any programmed control surfaces which may be operated by dynamic pressure, electronics, etc., must also be calibrated. During the flight test program, it is frequently necessary to rig a control, such as the swashplate or tail rotor blade angle, to the allowable critical extreme of the tolerance band. For example, it would be necessary to rig the tail rotor to the minimum allowable blade angle if meeting the requirements of §29.143(c) would be in question. The same consideration must be given to all rotorcraft controls and moveable aerodynamic surfaces where questionable compliance with the regulations may exist. If the rotor-induced vibration characteristics of the rotorcraft are significantly affected and require time-consuming rigging for such things as acceptable ride comfort, then the rotor(s) should be rigged to the allowable extreme tolerance limits to determine compliance, for example, with § 29.251.

(4) During the FAA/AUTHORITY flight test program, the crew should be especially alert for conditions requiring great attentiveness, high skill levels, or exceptional strength. If any of these features appear marginal, it is advisable to obtain another pilot's opinion and to carefully document the results of these evaluations. Section 29.141(b) provides the regulatory basis for these strength and skill requirements. The general requirements for a smooth transition capability between appropriate flight conditions are also included in § 29.141(b). These requirements must also be met during appropriate engine failure conditions for each category of rotorcraft.

(5) For night or IFR approval, § 29.141(c) contains the general regulatory reference which requires additional characteristics for night and IFR flight. The appropriate flight test procedures are included in other portions of this order.

AC 29.143. § 29.143 (Amendment 29-24) CONTROLLABILITY AND MANEUVERABILITY.

a. Explanation.

(1) This regulation contains the basic controllability requirements for transport rotorcraft. It also specifies a minimum maneuvering capability for required conditions of flight. The general requirements for control and for maneuverability are summarized in § 29.143(a) which is largely self-explanatory. The hover condition is not specifically addressed in § 29.143(a)(2) so that the general requirement may remain applicable to all rotorcraft types, including those without hover capability. For rotorcraft, the hover condition clearly applies under "any maneuver appropriate to the type."

(2) Paragraphs (b) through (e), § 29.143, include more specific flight conditions and highlight the typical areas of concern during a flight test program.

(i) Section 29.143(b) specifies flight at V_{NE} with critical weight, center of gravity (CG), rotor RPM, and power. Adequate cyclic authority must remain at V_{NE} for nose down pitching of the rotorcraft and for adequate roll control. Nose down pitching capability is needed for control of gust response and to allow necessary flight path changes in a nosedown direction. Roll control is needed for gust response and for normal maneuvering of the aircraft. In the past, 10 percent control margin has been applied as an appropriate minimum control standard. The required amount of control power, however, has very little to do with any fixed percentage of remaining control travel. There are foreseeable designs for which 5 percent remaining is adequate and others for which 20 percent may not be enough. The key is, can the remaining longitudinal control travel at V_{NE} generate a clearly positive nose down pitching moment, and will the remaining lateral travel allow at least 30° banked turns at reasonable roll rates? Moderate lateral control reversals should be included in this evaluation and since available roll control can diminish with sideslip, reasonable out of trim conditions (directionally) should be investigated. This "control remaining" philosophy must also be applied for other flight conditions specified in this section.

(ii) Section 29.143(c) requires a minimum 17-knot control capability for hover and takeoff in winds from any azimuth. Control capability in wind from zero to at least 17 knots must also be shown for any other appropriate maneuver near the ground such as rolling takeoffs for wheeled rotorcraft. These requirements must be met at all altitudes approved for takeoff and landing. On rotorcraft incorporating a tail rotor, efficiency of the tail rotor decreases with altitude so that a given sideward flight condition requires more pedal deflection, a higher tail rotor blade angle, and more horsepower. Hence, directional capability in sideward flight (or at critical wind azimuth) is most critical during testing at a high altitude site. Prior to Amendment 29-24, hover controllability, height-velocity, and hover performance were the three regulatory requirements that ordinarily determined the shape of the limiting weight-altitude-temperature (WAT) curve for takeoff and landing. For Category A performance rotorcraft operations, of course, the one-engine-inoperative climb performance requirements may also influence the WAT limit curve. Amendment 29-24 allows, under certain conditions, the deletion of any hover controllability condition determined under Section 29.143(c) from becoming an operating limitation. Section 29.1587 of Amendment 29-24 provides a means wherein Category B certificated rotorcraft (in accordance with the requirements of 29.1, effective with Amendment 29-21) may not be limited by the hover controllability requirements of 29.143(c). Section 29.1583(g) requirements for Category A certificated rotorcraft are unchanged from past regulatory requirements in that if the hover controllability requirements of 29.143(c) result in the most restrictive envelope it will be published as an operating limitation. Section 29.1587(b) provides a means wherein Category B certificated rotorcraft, as defined in FAR 29.1, may not be restricted in its utilization. It allows such rotorcraft to publish the maximum takeoff and landing capabilities of the rotorcraft, provided something other than the 17 knot hover controllability requirement is not limiting. This may be zero wind IGE hover performance or any other performance the applicant elects to use if the maximum safe wind for operations near the ground is provided. Rotorcraft certificated prior to Amendment 29-24 can update their certification basis to take advantage of this provision. If an applicant with a previously type certificated rotorcraft elects to update to this later amendment, caution should be taken to verify that the height-velocity information is done in accordance with Amendment 29-21; that all engine out landing capabilities are satisfactorily accounted for at the new proposed gross weight, altitude, temperature combinations; that takeoff/landing information is provided; and that sufficient information is provided to properly advise the crew of the rotorcraft's capabilities when utilizing this increased performance capabilities.

(iii) Section 29.143(d) requires adequate controllability when an engine fails. This requirement specifies conditions under which engine failure testing must be conducted and includes minimum required delay times.

(A) For rotorcraft which meet the engine isolation requirements of Category A, demonstration of sudden complete single-engine failure is required at critical conditions throughout the flight envelope including hover, takeoff, climb at V_Y, and high speed flight up to V_{NE}. Entry conditions for the first engine failure are engine

or transmission limiting maximum continuous power (or takeoff power where appropriate) including reasonable engine torque splits. For multiengine Category A installations (three or more engines) subsequent engine failures should be conducted utilizing the same criteria as that used for first-engine failure. The applicant may limit his flight envelope for subsequent failures. Initial or sequential engine failure tests are ordinarily much less severe than the “last” engine failure test required by § 29.75(b)(5). The conditions for last-engine failure are maximum continuous power, or 30-minute power if that rating is approved, level flight, and sudden engine failure with the same pilot delay of 1 second or normal pilot reaction time, whichever is greater.

(B) For Category B powerplant installation rotorcraft, demonstration of sudden complete power failure is required at critical conditions throughout the flight envelope. This includes speeds from zero to V_{NE} (power-on) and conditions of hover, takeoff and climb at V_Y. Maximum continuous power is specified prior to the failure for the cruise condition. Power levels appropriate to the maneuver should be used for other conditions. The corrective action time delay for the cruise failure should be 1 second or normal pilot reaction time (whichever is greater). Cyclic and directional control motions which are part of the pilot task of flight path control are normally not subject to the 1-second restriction; however, the delay is always applied to the collective control for the cruise failure. If the aircraft flying qualities and cyclic trim configuration would encourage routine release of the cyclic control to complete other cockpit tasks during cruise flight, consideration should be given to also holding cyclic fixed for the 1-second delay. Although the same philosophy could be extended to the directional controls, the likelihood of the pilot having his feet away from the pedals is much lower, unless the aircraft has a heading hold feature. Rotor speed at execution of the cruise condition power failure should be the minimum power-on value. The term “cruise” also includes cruise climb and cruise descent conditions. Normal pilot reaction times are used elsewhere. Although this requirement specifies maximum continuous (MC) power, it does not limit engine failure testing to MC power. If a takeoff power rating is authorized for hover or takeoff, engine failure testing must also be accomplished for those conditions in order to comply with § 29.63(c). Following power failure, rotor speed, flapping, and aircraft dynamic characteristics must stay within structurally approved limits.

(iv) Section 29.143(e) addresses the special case in which a V_{NE} (power-off) is established at an airspeed value less than V_{NE} (power-on). For this case, engine failure tests are still required at speeds up to and including V_{NE} (power-on), and the rotorcraft must be capable of being slowed to V_{NE} (power-off) in a controlled manner with normal pilot reactions and skill. There is, however, no controllability requirement for stabilized power-off flight at speeds above 1.1 V_{NE} (power-off) when V_{NE} (power-off) is established per § 29.1505(c).

(v) Application of the controllability requirement for pitch, roll, and yaw at speeds of 1.1 V_{NE} (power-off) and below is similar to that described above for power-on testing at V_{NE}. Sufficient directional control must exist to allow straight flight in autorotation during all approved maneuvers including 30° banked turns up to V_{NE}

(power-off) with some small additional allowance for gust control. Adequate controllability margins must exist in all axes throughout the approved autorotative flight envelope. Testing to V_{NE} at MC power per § 29.143(b), 1.1 V_{NE} at power for 0.9 V_H per § 29.175(b) or § 29.1505, and to 1.1 V_{NE} (power-off) in autorotation per § 29.143(e) should be sufficient to assure adequate control margin during a descent condition at high speed and low power. The high speed, power-on descent condition should be checked for adequate control margin as a "maneuver appropriate to the type." There has been one instance where insufficient directional pedal was available to maintain a reasonable trimmed sideslip angle with low power at very high speeds, and a case where there was insufficient forward and lateral cyclic available to reach the power-on V_{NE}. The insufficient directional pedal margin was due to the offset vertical stabilizers. The lack of cyclic stick margin was because the cyclic stick migrated to the right as power was reduced and the control limits were circular. This provided less total available forward cyclic stick travel when the cyclic was moved right and forward about 45° from the center position. Each of the above rotorcraft was certificated with a rate of descent limitation to preclude operation in the control-limited area.

(vi) An evaluation of the emergency descent capability of the rotorcraft should be made, either analytically or through flight test. Areas of consideration are the rate of descent available, the maximum approved altitude, and the time before a catastrophic failure following the loss of transmission oil pressure or other similar failure. Each rotorcraft should have the capability to descend to sea level and land from the maximum certificated altitude within the time period established as safe following a critical failure. If the time period does not permit a sea level landing, the maximum height above the terrain must be specified in the limitation section of the Rotorcraft Flight Manual.

(3) The required controllability and maneuvering capabilities must also be considered following the failure of automatic equipment used in the control system (§ 29.672). Examples include stability augmentation systems (SAS), stability and control augmentation systems (SCAS), automatic flight control systems (AFCS), devices to provide or improve longitudinal static stability such as a pitch bias actuator (PBA), yaw dampers, and fly-by-wire elevator or stabilator surfaces. These systems all use actuators of some type, and they are subject to actuator softover and hardover malfunctions. The flight control system should be evaluated to determine whether an actuator jammed in an extreme position would result in reduced control margins. Generally, if the flight control system stops are between the actuator and the cockpit control, the control margin will be affected. If the control stops are between the actuator and the rotor head, the control margins may not be affected, but the location of the cockpit control may be shifted. This could produce interference with other items in the cockpit. An example of this would be a lateral actuator jammed hardover causing a leftward shift in the cyclic stick position. Interference between the cyclic stick, the pilot's leg, and the collective pitch control could reduce the left lateral control available and reduce left sideward flight capability. In the case of fly-by-wire surfaces, both the high speed forward flight controllability and the rearward flight capabilities could be affected. Flight control systems that incorporate automatic devices should be thoroughly

evaluated for critical areas. Every failure condition that is questionable should be flight tested with the appropriate actuator fixed in the critical failure position. These failures may require limitations of the flight envelope. Any procedure or limitation that must be observed to compensate for an actuator hardover and/or softover malfunction should be included in the Rotorcraft Flight Manual.

b. Procedures.

(1) Flight test instrumentation should include ambient parameters, all flight control positions, rotor RPM, main and tail rotor flapping (if appropriate), engine power instruments, and throttle position. Flight controls that are projected to be near their limits of authority should be rigged to the most adverse production tolerance. A very accurate weight and balance computation is needed along with a precise knowledge of the aircraft's weight/CG variation as fuel is burned.

(2) The critical condition for V_{NE} controllability testing is ordinarily aft CG, MC power, and minimum power-on rotor RPM, although power and RPM variations should be specifically evaluated to verify their effects. The turbine engine is sensitive to ambient temperatures which affect the engine's ability to produce rated maximum continuous torque. Flight tests conducted at ambient temperatures that cause the turbine temperature to limit maximum continuous power would not produce the same results obtained at the same density altitude at colder ambient temperatures where maximum continuous torque would be limiting. Forward CG should be spot checked for any "tuck under" tendency at high speed. The V_{NE} controllability test is normally accomplished shortly after the 1.1 V_{NE} (or 1.1 V_H) point obtained during stability tests required by § 29.175(b). Controllability must be satisfactory for both conditions. If V_{NE} varies with altitude or temperature, V_{NE} for existing ambient conditions is utilized for the test. Extremes of the altitude/temperature envelope should be analyzed and investigated by flight test.

(3) The critical condition for controllability testing in a hover is ordinarily forward CG at maximum weight with minimum power-on rotor RPM. For rearward flight testing of configurations where the forward CG limit varies with weight, low or high gross weight may be critical. Lateral CG limits should also be investigated. A calibrated pace vehicle is needed to assure stabilized flight conditions. Surface winds should be less than 3 knots throughout the test sequence. Testing can be done in higher stabilized wind conditions (gusting less than 3 knots); however, these conditions are very difficult to find and the method is very time consuming due to the necessity of waiting for stabilized winds. Testing in calm winds is preferred. Hover controllability testing should be accomplished with the lowest portion of the rotorcraft at the published hover height above ground level; however, the test altitude above the ground may be increased to provide reasonable ground clearance. Although the necessary yaw response will vary somewhat from model to model, sufficient control power should be available to permit a clearly recognizable yaw response after full directional control displacement when the rotorcraft is held in the most critical position relative to wind.

(4) Prior to engine failure testing, it is mandatory that the pilot be fully aware of his engine, drive system, and rotor limits. These limits were established during previous ground and flight tests and they should be specified in the TIA. Particular attention should be given to minimum stabilized and minimum transient rotor RPM limits. These values must be included in the TIA and should be approached gradually with a build-up in time delay unless the company testing has completely validated all pertinent aspects of engine failure testing. On Category A installations the maximum power output of each engine must be limited so that when an engine fails and the remaining engine(s) assume the additional load, the remaining engine(s) are not damaged by excessive power extraction and over-temping. This is needed for compliance with § 29.903(b). The propulsion engineer should have assured that this feature was properly addressed in the engine and drive system substantiation; however, it must be assumed that for some period of time the pilot may extract maximum available power from the remaining engine(s) when an engine fails during critical flight maneuvers. Substantiation of this feature should be accomplished primarily by engine and drive system ground tests.

(5) Longitudinal cyclic authority at V_{NE} with any power setting must permit suitable nose down pitching of the rotorcraft. If the remaining control travel is considered marginal, tests should include applications up to full control deflection to assess the remaining authority. Some knowledge of the aircraft's response to turbulence is useful in assessing the remaining margin. As a minimum, the rotorcraft must have adequate margin available to overcome a moderate turbulent gust and must not have any divergent characteristic which requires full deflection of the primary recovery control to arrest aircraft motion. If other controls must be utilized to overcome adverse aircraft motion, the results are unacceptable; e.g., if a pitch up tendency resulting from an actual or simulated moderate turbulent gust cannot be satisfactorily overcome by remaining forward cyclic, the use of throttle or collective controls to assist the recovery is not an acceptable procedure; however, the use of lateral cyclic to correct roll in conjunction with forward cyclic to correct pitchup is satisfactory. Obviously during the conduct of these tests, all available techniques should be utilized when the pilot finds himself "out of control." However, compliance with this section requires that recovery must be shown by use of only the primary control for each axis of aircraft motion.

(6) Cyclic control authority in autorotation must be sufficient to allow adequate flare capability and landing under the all engine inoperative requirements of § 29.75(b)(5) and (c). See paragraph AC 29.75.

AC 29.151. § 29.151 (Amendment 29-24) FLIGHT CONTROLS.

a. Explanation. Excessive breakout or preload in the flight controls produces control system force discontinuities which result in increased workload and even controllability problems for the pilot. Similarly, excessive freeplay results in lost motion which increases pilot workload and, in an extreme case, could lead to a hazardous pilot-induced oscillation. Although in some designs friction can provide a positive contribution to the function of the flight controls (e.g., masking aerodynamic feedback in

reversible systems), friction will eventually have a detrimental effect on the pilot's ability to properly control the machine. In the case of an irreversible design equipped with an artificial force feel system in pitch and roll, excessive friction can mask a shallow force gradient making positive stick centering and control force static stability difficult if not impossible to demonstrate. In such an instance, the initial choice of fixes might include implementation of a steeper force gradient or addition of a force preload. Unfortunately, these solutions often lead to the kinds of problems discussed earlier. Care must therefore be exercised during the initial design phase to ensure that the components and characteristics of the flight control system are well matched.

b. Procedures. Regardless of the flight control system sophistication, it is important that the test pilot understand the system configuration prior to flight evaluation. Appropriate mechanical characteristics should be documented. For VFR aircraft, the mechanical characteristics are typically assessed in flight on a qualitative basis. If a controllability or workload problem is identified, a more detailed investigation would be necessary. Since IFR certification rules include specific trim and force requirements, a more quantitative investigation of mechanical characteristics is normally conducted. The constantly varying feedback forces of reversible flight control systems generally make such designs unsuitable for IFR application. Irreversible system mechanical characteristics can often be partially documented on the ground with external hydraulic and electrical power supplies connected to the aircraft. Knowledge of the breakout, friction, and force gradient characteristics prior to flight can be useful to the pilot during flight evaluation of the system.

AC 29.161. § 29.161 TRIM CONTROL.

a. Explanation.

(1) The pilot has many tasks to perform with each hand during sustained flight conditions. The trim requirement is intended to provide the pilot with a reference cyclic control position for the given flight condition, reduce the physical demands to maintain a given flight condition, and allow the pilot to release the cyclic control for brief periods of time to perform other cockpit duties. A primary flight control which can move when released imposes an additional pilot workload by requiring a continuous hands-on condition. It is not intended to require that control forces be reduced to zero by the trim control during dynamic maneuvers such as takeoff acceleration.

(2) A number of devices may be used to produce the necessary trim characteristics. One popular method of meeting this requirement is through the use of control balance springs in conjunction with a small amount of built-in control system friction. Other methods include use of friction, magnetic brakes, bungees, and irreversible mechanical schemes.

(3) This regulation is not intended to require zero friction or zero breakout force in the control system, nor is it intended to require automatic control recentering. The

regulation, in fact, specifically prohibits excessive high friction or high breakout forces which would produce undesirable discontinuities in the primary control force gradient.

b. Procedures.

(1) If comprehensive company flight test data are available, compliance with this requirement can quickly be found by spot checking extreme center of gravity loadings. Trim tests can ordinarily be done during the course of other flight test activities. To conduct the test, simply release the control at the required flight conditions and determine that the control does not move. The words “any appropriate speed” ordinarily include any speed from hover to V_H. If the control system trim device might be subject to temperature or humidity effects, these should be investigated at a minimum of two altitude extremes and during several test phases.

(2) If a pilot controllable variable friction device is incorporated, compliance with this requirement must be shown at the minimum adjustable value. The maximum value of adjustable friction should not completely lock the flight controls.

(3) Continued compliance with this requirement should be assured through a production procedure. If minimum friction or centering springs are used, it is desirable for the manufacturer to include some adjustment capability for production differences. The explanation and procedures discussed here are applicable for VFR approval under § 29.161. For additional IFR trim requirements, refer to AC 29 Appendix B.

AC 29.161A. § 29.161 (Amendment 29-24) TRIM CONTROL.

a. Explanation. Amendment 29-24 to the regulation adds the additional requirement that the trim control be capable of trimming collective forces to zero.

b. Procedures. The trim requirement is intended to allow the pilot to release the controls for brief periods to perform other cockpit duties, and to provide the pilot with a reference cyclic position for the given flight condition. The collective should be balanced so that there is no tendency for the collective pitch to change when the collective is released. Any magnetic clutch, friction brake or similar device which modifies the collective characteristics should be capable of being overpowered by the pilot, when fully applied, without requiring excessive force.

AC 29.171. § 29.171 STABILITY: GENERAL.

a. Explanation. This section is intended to require a manageable pilot workload for the minimum crew under foreseeable operating conditions.

b. Procedures.

(1) Compliance with the requirements of this section can often be obtained for the VFR condition without any specific or designated flight testing. If the rotorcraft is

marginal in regard to pilot strain and fatigue, the FAA/AUTHORITY pilot should be assured, through special tests if necessary, that the aircraft can be satisfactorily flown throughout the maximum endurance capabilities of the rotorcraft including night and turbulence conditions if those are critical. This test should be conducted with minimum required systems in the aircraft and with minimum flight crew.

(2) Reasonable failure conditions which add to pilot workload, strain, and fatigue should be evaluated (electrical, hydraulic and mechanical failures, etc.). The necessary times associated with flight with a failed system must be appropriate to the flight manual procedures for each failure. A failure condition requiring immediate landing would obviously require shorter evaluation time than a condition allowing continued flight to destination.

(3) IFR approvals necessitate a careful evaluation of paragraphs (1) and (2) above. In IFR operations, weather conditions frequently necessitate continued flight to destination or diversion to alternate airports with critical failures. Immediate landing may not be feasible. The evaluating pilot must assure pilot strain and fatigue are acceptable during typical flight profiles for each type of operation to be approved.

AC 29.173. <u>§ 29.173 (Amendment 29-24) STATIC LONGITUDINAL STABILITY</u>.

a. <u>Explanation</u>.

(1) This rule contains control system design requirements for both stability and control. Paragraph (a) contains the basic control philosophy necessary for all civil aircraft. Forward motion of the cyclic control must produce increasing speeds and aft motion must result in decreasing speeds. For rotorcraft this is accomplished with throttle and collective held constant. This requirement in no way assures aircraft stability. It is simply a control requirement which speaks to direction of control motion. Rotorcraft with either highly stable or highly unstable static longitudinal stability characteristics can typically comply with the basic requirement for control sense of motion.

(2) The remainder of § 29.173, through reference to § 29.175, contains the basic control position requirements necessary to establish a minimum level of static longitudinal stability. Positive stability is found for conditions of climb, cruise, and autorotation in § 29.175 by requiring a stable stick position gradient through a specified speed range. A defined level of instability is permitted for the hovering condition.

b. <u>Procedures</u>.

(1) The control requirement of this section is so essential to basic flight mechanics that compliance may be found during conventional flight testing for compliance with other portions of the regulations. No special or designated testing should be required.

(2) The procedures necessary to assure compliance with the stability requirements of this section are contained under § 29.175, Demonstration of static longitudinal stability. Refer to paragraph AC 29.175 for an explanation of detailed flight test procedures.

AC 29.175. § 29.175 (Amendment 29-24) DEMONSTRATION OF STATIC LONGITUDINAL STABILITY.

a. Explanation.

(1) This rule incorporates the specific flight requirements for demonstration of static longitudinal stability. Specific loadings, configurations, power levels, and speed ranges are stated for conditions of climb, cruise, autorotation, and hover.

(2) Some rotorcraft in forward flight experience significant changes in engine power with changes in airspeed even though collective and throttle controls are held fixed and altitude remains relatively constant. For these cases, the guidance in § 29.173, which states that throttle and collective pitch must be held constant, is appropriate for administration of this rule, and the specified power in § 29.175(a), (b), and (c) should be considered as power established at initial trim conditions. This will result in slightly higher or lower torque readings at “off trim” conditions. Collective and throttle controls are held constant when obtaining data during climb, cruise, and autorotation tests.

(3) The effects of rotor RPM on autorotative static stability should be determined, and positive stability demonstrated for the most critical RPM. For Category A rotorcraft this requirement may be satisfied at a nominal RPM value. RPM values can be expected to change as airspeed is varied from the “trimmed” condition. Manufacturer’s recommended autorotation airspeed is ordinarily used for trim.

(4) Hovering is considered a flight maneuver for which the pilot repeatedly adjusts collective to maintain an approximately constant altitude above the ground. For hover stability tests, collective and throttle adjustments are made as necessary to maintain an approximately constant height above the ground. Also, a limited amount of negative longitudinal control travel is allowed with changes in speed.

b. Procedures.

(1) Instrumentation.

(i) Sensitive control position instrumentation is mandatory. Engine power parameters should be recorded at trim. For testing of minor modifications or when using a “before and after” method, a tape measure or a stick plotting board may be utilized. A stick plotting board consists of a level surface with a clean sheet of paper on it and attached to the cockpit or seat structure. The installation must not interfere when the flight controls are fully displaced. A recording pencil is attached to the cyclic control

by an offsetting arm in such a manner that it can be pushed down on the board to record relative cyclic position at key times during test maneuvers. The figure AC 29.175-1 plot is a typical presentation of longitudinal static stability.

(ii) Other necessary parameters include pitch attitude, pressure altitude, ambient temperature, and indicated airspeed (pace vehicle or theodolite speed for hover tests). For hover tests, hover height (radar altitude if available), and surface winds should be documented. Two-way communications with a pace vehicle is highly desirable. Ground safety equipment is desirable.

(2) Ambient Conditions. Smooth air is necessary for stability testing. Allowable wind conditions for hover stability testing are the same as those for hover controllability tests and are described in that section (paragraph AC 29.151). Extrapolation is covered in paragraph AC 29.53.

(3) Loading. Aft center of gravity (CG) is ordinarily critical for longitudinal stability testing, although high speed flight and hover should be checked at full forward CG and maximum weight. At aft CG, light or heavy weight conditions can be critical. The manufacturer's flight data should be reviewed to determine critical loading conditions.

(4) Conducting The Test.

(i) The rotorcraft should be established in the desired configuration and flight condition (climb, cruise, autorotation) with the required power and rotor speed at the trim airspeed. The collective stick should be fixed in that position, usually by applying sufficient friction to insure that it is not inadvertently moved. For autorotative tests, a rotor speed should be selected so that the variations in rotor speed as airspeed and altitude change do not exceed the allowable limits. This point is recorded as the trim point. Airspeed is then increased or decreased in about 10-knot increments, stabilizing on each speed and recording the data. At least two points on each side of the trim speed should be taken.

(ii) The cruise test should be conducted by varying airspeed around the desired altitude with throttle and collective fixed. This should be accomplished by first determining V_H (level flight speed at maximum continuous power) at the test altitude. Then reduce power to establish a level trimmed condition at 0.9 V_H (or 0.9 V_{NE} if lower). This point is then recorded as the trim point.

(iii) For climb and autorotation tests, conduct fixed collective tests through an altitude band (usually ±2,000 feet), first increasing airspeed as data points are collected, then decreasing speed through the same altitude band. It will probably not be possible to obtain the required data on one pass through the altitude band. If repeated passes are required, a trim point should be taken at the beginning of each pass unless very sensitive collective pitch position information is available in the cockpit. Generally,

it will be possible to acquire all the high speed points on one pass and the low speed points on the second.

(iv) If extremely precise results are required, an alternate method of testing can be used to acquire the data at a constant altitude. For cruise, data can be obtained by alternating airspeeds above and below the trim speed to arrive in the vicinity of the test altitude as the point is recorded. This method results in very precise data because collective and throttle are not moved as airspeed is changed at a constant altitude. A typical sequence of speeds that could produce these results would be: 150 (V_H), 135 ($0.9V_H$) trim speed, 125, 145, 115, 155, 105, and 165.

(v) For rotorcraft with high rates of climb, a series of climbs, each at a different speed, may be required through a given altitude, utilizing sensitive instrumentation to assure collective position is the same for each data point. In autorotation, a similar case arises and a series of descents, each at a different speed, may be required through a given altitude band, using sensitive instrumentation to assure a repeatable collective position.

(vi) Hover tests should be conducted by maintaining an approximately constant altitude above the ground at the hover height established for performance purposes. The test altitude above the ground may be increased to provide reasonable ground clearance during rearward flight. Groundspeed is varied using a pace vehicle, theodolite, or other velocity measuring equipment. A pace vehicle is an aid in maintaining an accurate hover height. The pilot can accurately maintain height by controlling his sight picture of the pace vehicle (level with the roof, antenna, etc.). Hover stability tests are ordinarily conducted in conjunction with hover controllability tests because instrumentation and facilities are essentially the same.

(vii) Normally climb, cruise, and autorotation tests should be conducted at low, medium, and high altitudes. See paragraph AC 29.45 for guidance on interpolation and extrapolation. High speed stability has been critical during cold weather testing. In two recent models, V_{NE} at cold temperatures has been limited by the stability requirements of § 29.176(b). Cold weather testing should be accomplished or a conservative approach for advancing blade tip Mach number should be used to limit cold weather V_{NE} to tip Mach number values demonstrated during warm weather testing.

(viii) Hover stability should be verified at low altitude and, if required, at high altitude. Refer to paragraph AC 29.45b(2) for guidance on expansion and extrapolation of altitude.

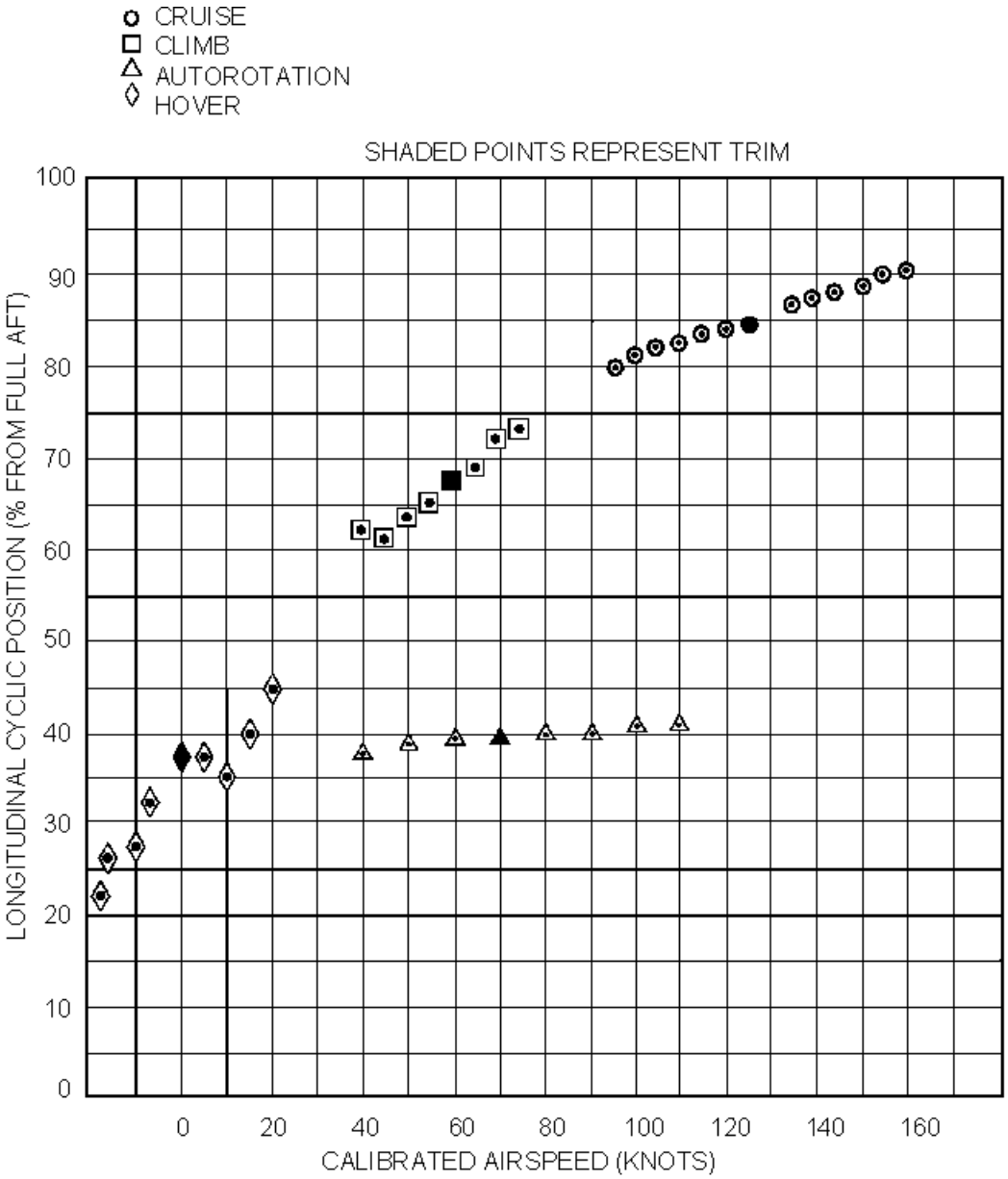

FIGURE AC 29.175-1 STATIC LONGITUDINAL STABILITY

AC 29.177. § 29.177 (Amendment 29-24) STATIC DIRECTIONAL STABILITY.

a. Explanation. This rule requires that positive static directional stability be demonstrated at the trim airspeeds defined in § 29.175. The trim speed for climb is V_Y and for cruise is $0.9V_H$ or $0.9V_{NE}$ (whichever is less). For autorotation that airspeed defined by the midpoint of the speed range specified in § 29.175(c) may be used.

b. Procedures.

(1) Tests for static directional stability require instrumentation for pedal position and sideslip angle. Lateral cyclic control position instrumentation should be provided for IFR certification tests. To obtain accurate sideslip angle and airspeed information, a "yaw boom" is usually installed for the purpose of mounting a sideslip vane and swiveling airspeed pitot head outside the main rotor downwash region of influence. Special care should be taken to ensure that the yaw boom installation has been verified to be structurally adequate and free of dynamic instabilities for all combinations of airspeed and rotor speed likely to be experienced during the static directional evaluation. For some installations, the instrumentation yaw boom may influence the flying qualities of the rotorcraft itself. Thus, it is advisable to correlate yaw string displacement or slip indicator ball widths of skid with yaw boom sideslip angle, and then repeat a few critical points with the yaw boom removed.

(2) For some rotor system designs, the main and tail rotor flapping angle may be a critical instrumentation requirement for static directional testing. Both main and tail rotor flapping may increase dramatically at high airspeeds with increasing sideslip angle. Therefore, for rotor systems exhibiting this characteristic, flapping should be monitored carefully during the sideslip maneuver to avoid exceeding limitations. Static directional stability is normally defined in terms of pedal displacement required to maintain a straight flight path sideslip. A single-rotor rotorcraft flying in coordinated flight will exhibit a small inherent sideslip due to tail rotor thrust and fuselage/main rotor sideforces. This condition is normally taken as trim with the inherent sideslip angle noted. Airspeeds should be the trim values described above. A generally accepted technique follows:

(i) Stabilize at the trim point, and note indicated airspeed.

(ii) Record trim conditions including inherent sideslip. Maintain fixed collective and throttle for the remainder of the maneuver.

(iii) Smoothly yaw the aircraft with directional control and coordinate with lateral control to establish the desired sideslip angle. A steady heading can best be ensured by maintaining a track over a straight landmark on the ground such as a section line or straight segment of powerline or highway.

(iv) Note airspeed immediately upon completion of the yaw maneuver. There may be a small change from the trim airspeed. Fly the new airspeed while

maintaining a constant heading, and record indicated airspeed, control positions (directional at a minimum), sideslip angle, rotor speed, rate of descent, amount of ball deflection, and bank angle. The pilot should note the physical sideforce feel experienced. A minimum of two sideslip data points on each side of the trim point should be obtained to adequately define the slope of the pedal displacement versus sideslip angle relationship.

(v) Smoothly return the aircraft to the inherent sideslip angle. Static directional stability plots can be expected to differ slightly on either side of the inherent sideslip angle. Positive static directional stability is indicated by increased left pedal displacement for a larger right sideslip and, conversely, increased right pedal for a larger left sideslip angle.

AC 29.181. § 29.181 (Amendment 29-24) DYNAMIC STABILITY: CATEGORY A ROTORCRAFT.

a. Explanation. This section requires that Transport Category A rotorcraft, certificated under Amendment 24 of FAR 29, demonstrate positive damping for short-period oscillations (5 seconds or less) at forward speeds from V_Y to V_{NE} with the cyclic, collective and directional controls held in the desired test condition or released by the pilot. This requirement would prevent persistent or divergent short-period oscillations and thus alleviate the pilot workload to actively dampen oscillatory motions for all types of operations.

b. Procedures.

(1) Tests for short period dynamic stability are carried out in the same manner as for IFR (reference AC 29 Appendix B) except the oscillation need not be damped as heavily (i.e., to ½ amplitude in not more than one cycle). Similarly pulses and doublets may be used to generate an upset condition that would be expected to be encountered in moderate turbulence for that particular rotorcraft.

(2) Tests should be conducted at the critical gross weight, altitude, center of gravity, rotor RPM, and power conditions during routine climb, cruise, and descent condition for speeds from V_Y to V_{NE}. This test must be conducted with the minimum amount of stability augmentation approved for continued safe flight. Consideration should be given to optional equipment that are to be mounted externally.

(3) This requirement is not applicable to transport category rotorcraft certificated as Category B only. The requirements for this situation are unchanged.

SUBPART B - FLIGHT

GROUND AND WATER HANDLING CHARACTERISTICS

AC 29.231. § 29.231 GENERAL (GROUND AND WATER HANDLING CHARACTERISTICS).

a. Explanation. The rule states: "The rotorcraft must have satisfactory ground and water handling characteristics, including freedom from uncontrollable tendencies in any condition expected in operation." In addition, §§ 29.235, 29.239, and 29.241, contain specific requirements concerning ground and water handling characteristic evaluations.

b. Procedures.

(1) During the flight test program and the F&R program (§ 21.35(b)(2)), the rotorcraft will be subjected to evaluations at various weight and CG conditions. Any uncontrollable tendencies found during these test programs must be corrected.

(2) Controllable or damped vibrations or oscillations on the ground or in the water are acceptable, provided the design limits of the rotorcraft are not exceeded.

(3) Any significant vibration or oscillation characteristics found during tests should be described in the test report, and the rotorcraft flight manual should contain appropriate descriptions and procedures to describe and either avoid or handle significant characteristics.

(4) For rotorcraft equipped with wheel gear, the evaluation should include takeoff, landing, and taxi at the maximum airspeed and ground speed CG extremes. If a nose or tail wheel lock/swivel control is installed, each position should be evaluated for limiting takeoff, landing, and taxi speeds. Maximum substantiated speed values should be included in the RFM as limitations.

(5) For water operations, the wave height and frequency or "sea state" should be included as a limitation or, if no limit was reached during testing, the demonstrated values should be placed in the Performance Section of the Rotorcraft Flight Manual. Information or limits on the allowable "sea state" for rotor startup and shutdown should also be included.

AC 29.235. § 29.235 TAXIING CONDITION.

a. Explanation. The rotorcraft is designed for certain landing load factors (§§ 29.471 and 29.473). The rotorcraft must not attain a load factor in excess of the design load factor when taxied over the roughest ground that may reasonably be expected in normal operation at the expected taxi speeds. This rule applies to wheel landing gear equipped rotorcraft.

b. Procedures. The structural substantiation data contains the allowable design limits for the rotorcraft. A calibrated accelerometer or load factor “g” meter should be installed, as near as practicable to the rotorcraft CG, to record the maximum vertical load factor attained. Instrumentation of the landing gear and/or related structure may also be an acceptable means of showing compliance.

(1) Calibrated instrumentation should be installed to record the maximum loads or maximum vertical load factor attained during the taxi tests.

(2) The taxi surface should be evaluated for compliance with the rule. Corrugated surfaces, as well as broken or uneven surfaces, in accordance with the rule, should be used.

(3) Representative typical taxi speeds, up to the maximum selected by the applicant, should be attained over the selected taxi surfaces.

(4) A light and heavy rotorcraft weight condition should be evaluated.

(5) Limitations appropriate for the rotorcraft design should be included in the flight manual. If these tests indicate that it is unlikely that limit load factors will be attained while taxiing, flight manual limitations may not be necessary.

(6) Pertinent taxi information obtained from these test conditions may be included in normal procedures of the flight manual.

AC 29.239. § 29.239 SPRAY CHARACTERISTICS.

a. Explanation. The intent of this requirement is to evaluate by demonstration that water spray does not obscure visibility (day or night) or damage the rotorcraft during normal waterborne operation (for those rotorcraft which have waterborne or amphibious capability).

b. Procedures.

(1) The following maneuvers should be evaluated in ambient conditions up to the proposed sea state or wave height for operation.

Con-fig.	Condition	Weight	CG	Rotor RPM	Alti-tude	Remarks
1	Taxi	Max	Optional	Max	SL	Speeds up to maximum proposed for water operation.
2	Hover	Max	Opt	Max	-	Determine critical hover height, if any.
3	Takeoff	Max	Opt	Max	SL	Unstick at maximum proposed water operation speed.
4	Land	Max	Opt	Max	SL	Touchdown at maximum proposed for water operation.
5	Shutdown	Opt	Opt	-	SL	Shut down the rotorcraft.
6	Start	Max	Opt	Max	SL	Start engines and release rotor brake.

(2) The maximum sea state or wave height evaluated under this rule should be stated and included in the limitations section of the flight manual.

(3) The effect of saltwater contamination and deterioration of turbine engines and other component parts of the rotorcraft should be considered in accordance with § 29.609 and paragraph AC 29.609. Information on saltwater effect and attendant corrective action should be provided in the flight manual, if appropriate, and in the maintenance manual.

AC 29.241. <u>§ 29.241 GROUND RESONANCE</u>.

a. <u>Explanation</u>.

(1) The rule states: “The rotorcraft may have no dangerous tendency to oscillate on the ground with the rotor turning.” This rule is a flight requirement that pertains to demonstrating freedom from dangerous oscillations on the ground. CAR Part 7, predecessor to FAR Part 29, originally contained a “strength requirement,” under § 7.203, requiring ground vibration tests. This test would identify critical vibration frequencies and modes of the rotorcraft. CAR Part 7, Amendment 7-4, effective October 1, 1959, removed this ground vibration requirement because the agency concluded that if any major component has a natural frequency which could be excited by some operating parameter, such a condition would be revealed in the course of other ground and flight tests. The Federal Aviation Administration (FAA) apparently was depending on demonstrations under § 7.131/§ 29.241 and the flight load survey data

(§ 29.571) to satisfy the objective of the vibration test. However, FAR 29, Amendment 29-3, contained new § 29.663 adding reliability and damping action investigation requirements for ground resonance prevention means. A ground vibration survey was not reinstituted by the adoption of § 29.663. Compliance with § 29.663 does require investigation and substantiation as stated. See paragraph AC 29.663.

(2) “Ground resonance” is a mechanical instability of the aircraft while in contact with the ground, often when partially airborne. Stated another way “ground resonance” is a self-excited mechanical instability that involves coupling between the in-plane motion of the rotor blade and the motion of the rotorcraft as a whole on its landing gear (reference “Aerodynamics of the Helicopter,” Gessow & Myers, page 308). It is caused by the motion of the blade in the plane of rotation (called in-plane vibration) coupled with a rocking or vertical motion of the aircraft as a whole. The tires, landing gear, and rotor restraint pylon structure act as a spring with a vibration frequency which coincides or couples with the natural in-plane frequency of the blade about a real or effective drag hinge in the plane of rotation. When the frequencies of the two motions (rotor and airframe) approach each other and couple, a violent shaking of the aircraft may occur which, if undamped, could result in the destruction of the rotorcraft.

(3) Ground resonance can occur due to flexibility in the rotor pylon restraint system as well as with landing gear flexibilities. This mode of vibration or resonance can happen in-flight (called air resonance) as well as on the ground and should be addressed in the certification program. The evaluation should include variations in stiffness and damping that could occur in service to the rotor pylon restraints (reference “Ground Vibrations of Helicopters,” M.L. Deutsch, JAS, Vol. 13, No. 5, May 1946). See paragraph AC 29.663 for the investigation of the variations.

(4) Ground resonance may be prevented by placing the first order in-plane vibration frequency above the rotor turning speed.

(5) For such configurations which are not susceptible to ground resonance (first order in-plane frequency above rotor turning speed), a simple rotor RPM run-up and run-down with appropriate cyclic control displacement (i.e., excitation of any inherent vibrations) is adequate demonstration that a ground resonance condition does not exist. Unhinged “rigid” rotors, such as Bell Helicopter 2 blade designs, are this type of rotor system.

(6) For configurations that are susceptible to ground resonance (i.e., first in-plane frequency is below the rotor turning speed), ground resonance is generally prevented by dampers on the blade, acting in the plane of rotation, dampers on the landing gear (sometimes serving as oleo struts), or proper placement of the landing gear frequencies combined with rotor and/or landing gear dampers.

(7) Elastomeric components (in the rotor pylon support system, possibly in the landing gear, and possibly in the rotor head) are significantly affected by ambient temperature prior to warm-up. Their damping characteristics require thorough

investigation for the range of rotorcraft operating environment as noted in paragraph AC 29.663.

b. Procedures.

(1) In operation, the resonance characteristics should be checked during takeoff and landing at zero speed and during run-on landings using various power values. Under all conditions, any oscillations which may be introduced should be damped. However, no instability should occur at any operating condition such as during RPM changes from minimum to maximum and idle to maximum. For rotorcraft with wheel gear, uneven taxi surfaces in conjunction with particular taxi speeds, may excite ground resonance and should be evaluated by taxiing on typical surfaces. This evaluation may be conducted in conjunction with tests of § 29.235.

(2) Slow vertical landings for each configuration are made to establish the touchdown collective pitch angle for each rotor speed. For those aircraft equipped with Stability Augmentation Systems (SAS), all ground resonance investigations should be conducted with SAS on and SAS off. This includes the hovering and running takeoffs and landings, taxi tests, and specific ground resonance tests noted herein. Consideration should be given to conducting tests in various SAS configurations such as roll channel on, pitch channel off, where such configurations are possible and authorized.

(3) For each rotorcraft configuration tested, the aircraft should be positioned on the ground in flat pitch with the rotor stabilized at the minimum practical rotational speed, or optionally, at a speed shown analytically to have significant margin from indicated resonant conditions. Control system inputs should be used to disturb the system for evaluation of subsequent damping.

(4) For each incremental increase in rotor speed and for each rotor speed setting at increments of collective pitch settings, cyclic and collective inputs should be investigated prior to proceeding to the next rotor speed setting. These inputs should cover the appropriate range and combinations of amplitude and frequency.

(5) Cyclic pitch inputs should be made, either by the pilot through the cyclic stick, or through a signal generating device working in conjunction with the cyclic controls. For each frequency of input, amplitude of the inputs should be increased incrementally and ultimately should be large enough to generate responses representative of normal ground and flight operation on the rotor and support system. The inputs should continue for a time sufficient to execute five complete counterclockwise circles of the cyclic stick (about neutral) at the selected frequency.

(6) At each amplitude of cyclic input, the excitation frequency should be incrementally increased over the range of the blade in-plane frequency in the fixed system. Rotor speed settings should be increased to 1.05 times the maximum power-on rotor speed. Collective pitch settings should be increased in increments of

not more than 20 percent to maximum collective or alternately to the collective setting required to become partially airborne (when the cyclic is displaced as noted).

(7) Typically, articulated rotor aircraft have natural frequencies on the blade in lag of approximately 0.3 times the power-on main rotor RPM; soft in-plane rotors have natural frequencies approximately 0.7 times the main rotor RPM. Therefore, for example, for a rotorcraft with an in-plane frequency of 0.3/rev, operating at 300 RPM, and with 6 inches of total lateral cyclic stick displacement, the stick should be rotated for 5 revolutions in a 0.6-inch diameter circle at ((1-.03) x 300 RPM) or 3.5 cycles per second to attempt excitation of possible resonant frequencies. At the conclusion of the excitation, the cyclic stick should be returned to the neutral position while continuing the recording of data listed in paragraph b(13).

(8) The complete program should again be repeated with cyclic excitation inputs from the directional and longitudinal controls, if critical for the type of rotorcraft being evaluated.

(9) If onset of ground resonance is encountered, the typical recommended corrective action is to increase the collective pitch and rotor speed and become airborne. However, lowering the collective pitch has been effective for some designs and is considered a satisfactory procedure if resonance can be consistently avoided.

(10) Landings should be made at the maximum touchdown speed proposed with the rotor speed stabilized.

(11) Special Considerations:

(i) The influence of variables including environmental effects, corresponding aircraft component characteristic changes, operational parameters, and surface conditions should be investigated over the ranges proposed for certification. Additionally, the potential of misservicing and possible failure modes should be evaluated. For ground resonance qualification, where practical, variations from the baseline test configuration may be accomplished by either ground run (§ 29.663(b)) requires investigation of probable ranges of damping), analyses, component tests, aircraft shake test, the specification of special operational procedures in the rotorcraft flight manual, or combination thereof. Detailed and rational analyses showing acceptable correlation to the baseline tests, and for which the input parameters were verified by drawings, calculations, component static or dynamic tests, or by aircraft shake tests simulating the conditions/configurations in question, may be used to limit testing to only those variables and operational conditions showing marginal or unacceptable system damping. All operational limitations should be clearly stated in the rotorcraft flight manual. A report of the analytical and/or test results should be permitted per § 29.663.

(ii) Potential instability while airborne, called “air resonance” may occur due to the dynamic coupling of the rotor flexibility and the pylon restraint flexibility. The

same considerations apply to air resonance as to ground resonance except that the pylon restraint variables replace the landing gear variables. Air resonance should be addressed in the certification program.

(iii) When operating on the ground, there may be a tendency for the aircraft to exhibit a “ground bounce.” For many configurations, this is a benign, although undesirable phenomenon which may be aggravated by pilot induced oscillations (PIO), particularly if there is little or no friction on the collective.

(12) On rotorcraft with fully articulated rotor heads equipped with landing gear oleos in either skid or wheel configuration, there are tendencies for ground bounce to occur when light on the oleos, either just prior to takeoff or just after landing contact, or during a power assurance check. This bounce may induce ground resonance, particularly if the intensity of the bounce is aggravated by PIO. The corrective action is either to lift off to a hover or to positively lower the collective and remain on the ground.

(13) Instrumentation and Data Acquisition.

(i) Atmospheric Conditions (to be manually noted):

Altitude
OAT
Wind Velocity

(ii) Aircraft Configuration (to be manually noted):

Gross Weight
C.G.
Tire Pressure
Landing Gear Oleo Pressure

(iii) Instrumentation (for recording during test).

Main Rotor RPM.
Time history of cyclic control fore-and-aft and lateral stick position
Time history of collective control stick position
Time history of rotor damper motion*
Time history of pylon component motion*
Time history of landing gear (oleo) motion*
Time history of aircraft motions*

*As required to obtain modal damping

SUBPART B - FLIGHT

MISCELLANEOUS FLIGHT REQUIREMENTS

AC 29.251. § 29.251 VIBRATION.

a. Explanation.

(1) Each part of the rotorcraft must be free from excessive vibration under each appropriate speed and power condition (rule statement).

(2) This flight requirement may be both a qualitative and quantitative flight evaluation. Section 29.571(a) contains the flight load survey requirement that results in accumulation of vibration quantitative data. Section 29.629 generally requires quantitative data to show freedom from flutter for each part of the rotorcraft including control or stabilizing surfaces and rotors. See paragraphs AC 29.571 and 29.629 for these two rules.

(3) Review Case No. 70 (reference FAA Order 8110.6) contains a policy 0statement concerning compliance with this rule. This policy statement is condensed here for convenience:

"The rotorcraft must be capable of attaining a 30° bank angle (turn), at V_{NE}, with maximum continuous power (maximum continuous torque) without encountering excessive roughness/vibration. The FAA/AUTHORITY requires the maneuver demonstration to provide the pilot with some maneuver capability at V_{NE} , and further to provide the pilot some margin away from roughness when operating in turbulence." (This maneuver may result in a descent or a climb.)

(4) Section 29.1505 pertains to V_{NE} determination. Section 29.1509 pertains to rotor speed limits determination. See paragraphs AC 29.1505 and AC 29.1509.

b. Procedures.

(1) During the company flight test program, the rotorcraft is flown to the appropriate rotor and airspeed limits at several weights to prove that the rotorcraft is free from excessive vibration under appropriate speed, power, and weight conditions. The flight loads survey quantitative data (reference § 29.571) and the applicant's qualitative and quantitative flight test data must also prove compliance with the requirement prior to issuing an authorization for official FAA/AUTHORITY flight tests.

(2) The flight load survey data obtained under § 29.571(a) will contain measured data concerning proof of freedom from flutter and excessive vibration. Pertinent critical flight conditions will be reinvestigated during FAA/AUTHORITY flight tests. The specific condition or conditions necessary to demonstrate compliance with § 29.251 varies with the rotorcraft design, and with the minimum and maximum rotor

speeds, V_{NE} and V_D speeds, and weight and CG position. An illustration of the speed and RPM demonstration is shown in figure AC 29.251-1. Also see subparagraph b(4).

(3) The airspeed and rotor speed limits investigated and established under §§ 29.33, 29.1503, 29.1505, and 29.1509 are also investigated and made a matter of record in the flight loads survey data. During the official FAA/AUTHORITY/TIA flight tests, critical parts of the rotorcraft may have limited instrumentation to reinvestigate and confirm that the critical conditions investigated during the flight load survey are satisfactory and do not result in excessive vibration. Use of instrumentation is optional if the flight loads data (reference paragraph AC 29.571) are conclusive.

(4) FAA policy for certification (Review Case No. 70) requires a “rotor roughness” flight demonstration of a 30° bank angle left and right, at maximum continuous power (MCP) (maximum continuous torque which may be in excess of the maximum continuous temperature limit), at V_{NE}. To provide the pilot with some margin from roughness, the FAA requires maneuver demonstrations of 30°banked turns at V_{NE} without encountering excessive roughness. The maneuver should be conducted with the rotor speed at the minimum RPM and maximum RPM limits. During the flight load survey, this condition should be investigated and data recorded to assure hazardous loads are not encountered for this “unusual” condition. As indicated, the flight condition will be reinvestigated during the FAA/AUTHORITY flight tests. See paragraph b(2) for illustration of this speed and RPM demonstration.

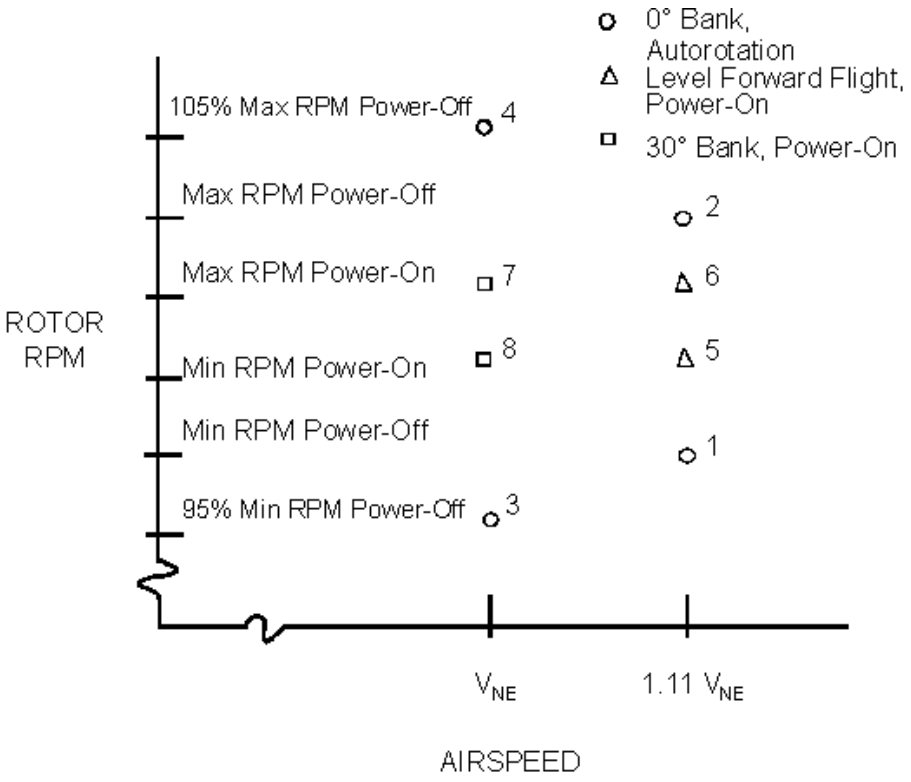

1. Autorotation at 1.11 $V_{NE\ (AR)}$ at minimum placard rotor speed.
2. Autorotation at 1.11 $N_{NE\ (AR)}$ at maximum placard rotor speed.
3. Autorotation at $N_{NE\ (AR)}$ at power-off minimum design limit rotor speed.
4. Autorotation at $N_{NE\ (AR)}$ at power-off maximum design limit rotor speed.
5. Forward flight 1.11 V_{NE} at minimum power-on rotor speed.
6. Forward flight 1.11 V_{NE} at maximum power-on rotor speed.
7. Right and left turn at V_{NE} at maximum power-on rotor speed with 30° bank angle.
8. Right and left turn at V_{NE} at minimum power-on rotor speed with 30° bank angle.
   Note: $V_{NE\ (AR)}$ may be less than V_{NE} .

FIGURE AC 29.251-1 DEMONSTRATION POINTS

CHAPTER 2. PART 29
AIRWORTHINESS STANDARDS
TRANSPORT CATEGORY ROTORCRAFT

SUBPART C - STRENGTH REQUIREMENTS

GENERAL

AC 29.301. § 29.301 LOADS.

a. Explanation.

(1) The rule is a general statement concerning limit and ultimate loads and the application of these loads to the rotorcraft.

(2) Ultimate loads are limit loads multiplied by the prescribed factors of safety.

(3) The specified loads must be distributed appropriately or conservatively and significant changes in distribution of the loads, as a result of deflection, must be taken into account.

b. Procedures. The design criteria report and/or design loads report must contain data that comply with the rule.

AC 29.303. § 29.303 FACTOR OF SAFETY.

a. Explanation.

(1) Unless otherwise provided by FAR Part 29, a factor of safety of 1.5 is required and is applied as stated in the rule. This safety margin will assure that the design strength of the rotorcraft is greater than the design loads contained in FAR Part 29.

(2) Other rules, §§ 29.561(b)(3) and 29.787(c), specify use of defined ultimate inertia forces for protection of occupants.

b. Procedures.

(1) The design criteria report and/or design loads report must contain data that include the appropriate factor of safety.

(2) The factor of safety multiplies the limit external and inertia loads. The rule does allow the application of this factor to the resulting “limit internal” stresses if it is more conservative.

AC 29.305. § 29.305 STRENGTH AND DEFORMATION.

a. Explanation.

(1) This general rule defines, in relative terms, allowable deformation for limit and ultimate loads.

(2) If static tests are used to show compliance with this rule, the structure must support ultimate loads for 3 seconds without failure. Alternatively, dynamic tests simulating actual load applications may be used.

(3) Section 29.307 concerns proof of the structure and requires certain specified tests. This rule also allows substantiation by structural analysis. See paragraph AC 29.307.

b. Procedures. Any test results, static or dynamic, must satisfy the limitations or acceptance criteria contained in the rule.

(1) Any test proposals submitted for approval that are used to demonstrate compliance with sections of FAR Part 29 must contain the criteria stated in the rule.

(2) Any test results reports must contain data and information showing the test results comply with the standard.

(3) When dynamic tests are not used to substantiate the ultimate strength of structure subject to significant dynamic response under load, the analytical substantiation should consider flexibility effects and rate of load application (tail boom strength under landing loads is an example of a strength which needs dynamic amplification effects considered).

AC 29.307. § 29.307 (Amendment 29-4) PROOF OF STRUCTURE.

a. Explanation.

(1) The rule requires compliance for each critical loading condition. Certain tests must be conducted as specified. Additional tests for new or unusual design features may be required as noted in § 29.307(b)(6).

(2) “Structural analysis may be used only if the structure conforms to those for which experience has shown the structural analysis method to be reliable.”

(3) Fatigue substantiation requirements are explained further in paragraph AC 29.571.

b. Procedures.

(1) The design criteria and/or design loads report should contain typical or representative loading conditions from which the critical loading conditions will be selected for analytical substantiation in structural (static and fatigue) reports and dynamics (vibration and stability) reports and fatigue, static, dynamic, or operational test reports.

(2) Whenever tests are used or required, a test proposal or plan must be approved prior to the tests. The test article must have received conformity inspections and must have been accepted by the FAA/AUTHORITY for the test. Test fixtures and instrumentation must also be acceptable to the FAA/AUTHORITY (using DERs as appropriate) prior to the start of the test. The quality control office of the applicant or other qualified personnel may be authorized to conduct inspections of the test fixtures and instrumentation rather than the FAA/AUTHORITY or DER performing this task. The test proposal may be used to define and to authorize the means to accomplish inspection of the test fixtures and instrumentation. Unnecessary drawings, such as test fixture details, or layering of approvals is not intended or envisaged by this policy. Drawings, sketches, or photographs have been used by the FAA/AUTHORITY to control and to assure correct location, direction, and magnitude of loads and other critical test parameters.

(3) Structural analysis has been accepted for rotorcraft in place of static tests. Generally the rotorcraft airframe should have frequency placements remote to predominate rotor excitation sources, including rotor harmonics, to avoid undesirable and possibly excessive vibration and potentially high operating stress levels due to this vibration. During the flight load measurement program conducted under § 29.571, critical loaded areas or critical joints may be instrumented with strain gages or other stress strain measuring devices. This actual flight data may be compared to the analytical data to verify accuracy.

(4) Section 29.307(b) specifies certain tests. Test proposals must be approved prior to conducting official FAA/AUTHORITY tests. Other paragraphs in this advisory circular pertain to those tests.

AC 29.307A. <u>§ 29.307 (Amendment 29-30) PROOF OF STRUCTURE</u>.

a. <u>Explanation</u>. Amendment 29-30 adds the requirement to account for the environment to which the structure will be exposed in operation. This change is intended to codify recent FAA/AUTHORITY and industry practices for the consideration of environmental effects in showing “proof of structure.”

b. <u>Procedures</u>. All of the policy material pertaining to this section remains in effect with the following additions:

(1) For either tests or an analysis, environmental effects are now explicitly required. Consideration of loss of strength and stiffness of metals with elevated temperatures and loss of strength and stiffness of composite materials from exposure

to heat, moisture, or other operational environments is now required and should be documented in analyses and test reports.

(2) MIL-HDBK-5F, AC 20-107B, or MIL-HDBK-17B, Vol I, Rev. 1E; Vol. II, Rev. D; Vol. III, Rev. E (or later versions) are acceptable sources of data and procedures to show compliance with environmental effects of metallic and composite materials, respectively.

AC 29.309. § 29.309 DESIGN LIMITATIONS.

a. Explanation.

(1) The rule requires an orderly selection and presentation of the basic structural design limitations of the rotorcraft. The applicant must establish these structural limitations to facilitate design of the rotorcraft.

(2) Refer to the rule for the specific requirements.

b. Procedures.

(1) The design criteria and/or design load report should contain the design limits specified.

(2) These items are structural design limits. Other requirements may result in narrowing the ranges of type design limits or in reducing limits. It is not necessary to revise structural design criteria limits to agree with more conservative operational limits established during the certification program. The operational limits may be subsequently expanded by additional flight tests to agree with design limits.

SUBPART C - STRENGTH REQUIREMENTS

FLIGHT LOADS

AC 29.321. § 29.321 GENERAL - FLIGHT LOADS.

a. Explanation.

(1) The rule specifies the way the loads will be applied to the rotorcraft. It requires load analysis from minimum to maximum design weight. Any practical distribution of disposable loads must be included in the analysis.

(2) Paragraph (a) of the rule states: "The flight load factor must be assumed to act normal to the longitudinal axis of the rotorcraft and to be equal in magnitude and opposite in direction to the rotorcraft inertia load factor at the center of gravity."

b. Procedures.

(1) Derivation of the flight loads is required by and specified in § 29.337 through § 29.351. This rule requires flight load determination from minimum to maximum weight and for disposable loads.

(2) The application of the design loads derived from the flight load factor will be as specified. The flight loads analysis data must comply with the rule.

AC 29.337. § 29.337 (Amendment 29-30) LIMIT MANEUVERING LOAD FACTOR.

a. Explanation. The rotorcraft must be designed and substantiated to load factors as specified to provide a minimum level of structural integrity of the rotorcraft airframe and rotors.

(1) A range of design positive load factors from +3.5 to +2.0 may be used.

(2) A range of design negative load factors from -1.0 to -0.5 may be used.

(3) Load factors inside the range of +3.5 to -1.0 may be used provided the probability of exceeding the design load factors is shown by analysis and flight tests to be extremely remote, and the selected load factors are appropriate to each weight condition between design maximum and minimum weights.

(4) Load factors exceeding these "minimums" may be used.

b. Procedures.

(1) The applicant may elect to substantiate the rotorcraft for a design maneuvering load factor less than +3.5 and more than -1.0. Whenever this option is used, an analytical study and flight demonstration are required.

(i) The maximum positive design load factor is +3.5 generally at a weight below maximum gross weight. The maximum thrust capability of the main rotor combined with incremental lift of wings or sponsons, if installed, results in a maximum design positive load factor. An example of a load factor - gross weight curve is shown in figure AC 29.337-1. Note the minimum positive design load factor is +2.0 even though the required analysis and flight demonstration may prove the rotorcraft is not capable of achieving this load factor. This curve also illustrates compliance with § 29.337(b)(2) since the design load factor varies with gross weight.

(ii) The largest negative design load factor is -1.0; however, several current rotorcraft designs are not capable of achieving a negative load factor. Therefore, -0.5 has been an acceptable structural design negative load factor for certain rotorcraft designs.

(2) Whenever the applicant analytically substantiates the lower load factors allowed by § 29.337(b), the applicant must conduct the flight demonstration required by § 29.337(b)(1). The flight test personnel must determine that the demonstration is conducted in a manner to show that the probability of exceeding the selected design load factors, (those factors less than +3.5 and more than -1.0) is extremely remote. (See Order 8110.4, paragraph 166c(2)(c)).

(3) A numerical value has not been assigned to “extremely remote” in this standard.

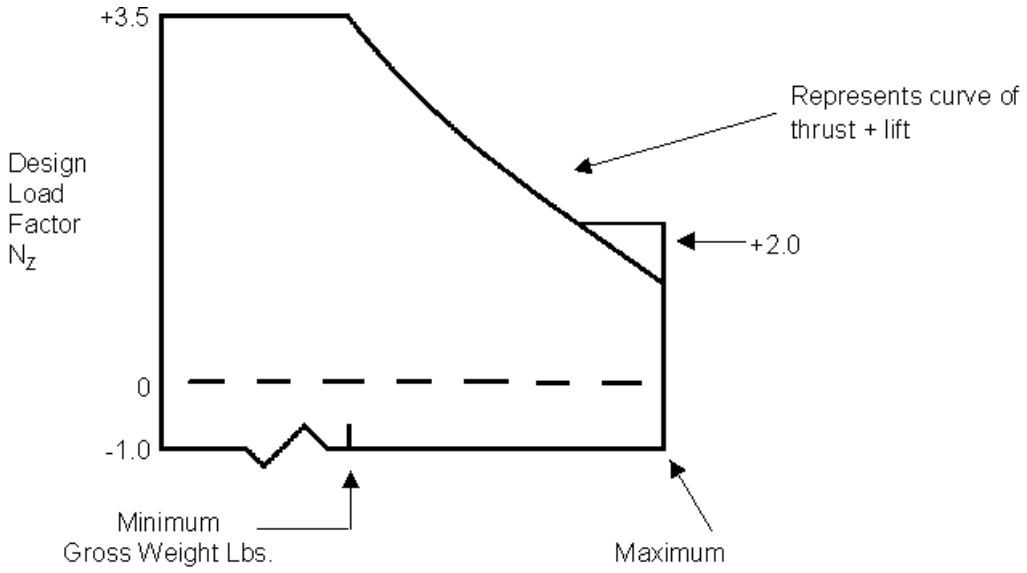

LOAD FACTOR GROSS WEIGHT CURVE
FIGURE AC 29.337-1

AC 29.339. § 29.339 RESULTANT LIMIT MANEUVERING LOADS.

a. Explanation. The rule specifies or defines the application of rotor and lift surface loads to the rotorcraft.

(1) The design maneuvering load factors required by § 29.337 will result in or be derived from rotor thrust or lift and from auxiliary surface lift.

(2) The rules §§ 29.321, 29.337, 29.341, and 29.351 all complement one another and result in the derivation of design flight loads that will be imposed to assure structural integrity of the rotorcraft.

(3) The following assumptions and conditions are specified in the rule.

(i) The rule requires application of appropriate loads at each rotor hub and auxiliary lifting surface.

(ii) Power-on and power-off flight with maximum design rotor tip speed ratio and specific conditions that must be considered.

(iii) Rotor tip speed ratio, defined in the rule, has been carried forward from the initial rotorcraft certification rules issued in 1946. The rotor tip speed ratio is a basic parameter used in calculating rotor aerodynamic forces.

b. Procedures.

(1) The rule specifies an acceptable assumption concerning application of the rotorcraft maneuvering loads.

(2) The rotor tip speed ratio is a parameter found in textbooks and other books such as NACA Report No. 716. The equation in the rule contains angle, “a.” Report No. 716 also defines angle, “a,” as the angle of attack of the rotor disk. This definition is more easily understood than the definition contained in the rule.

(3) The rotorcraft design loads are derived as prescribed by §§ 29.321, 29.337, 29.341, and 29.351. These loads are applied to the rotor or rotors and any auxiliary surface as prescribed by this rule.

AC 29.341. §29.341 GUST LOADS.

a. Explanation.

(1) The rotorcraft must be substantiated for the loads derived from 30 feet per second vertical and horizontal gusts from hovering to 1.11 V_{NE} ; i.e., (V_D).

(2) Gust loads for any vertical stabilizing surface should be derived for lateral or sideward gusts, as well as the head-on horizontal gusts. See paragraph AC 29.413, § 29.413(a)(2).

(3) Gust loads for any horizontal stabilizing surface should be derived for vertical gusts, upward and downward, as well as for head-on gusts. See paragraph AC 29.413.

b. Procedures.

(1) Either sharp-edged (instantaneous) gusts or sharp-edged gusts modified by an alleviation (attenuation) factor may be used for calculating aerodynamic loads for the rotorcraft and any installed stabilizing surfaces. The following conditions may be used:

(i) Vertical gusts may be considered normal to the flight path of the rotorcraft except during hover or low speed flight (20 knots or less) when the gusts may be assumed normal to the longitudinal axis of the rotorcraft.

(ii) For a vertical stabilizing surface, the horizontal gusts are normal to the flight path of the rotorcraft except during hover or low speed flight when the gusts may be assumed normal to the longitudinal axis of the rotorcraft.

(iii) A primary effect of encountering the gust is to change the lift of the rotors and rotorcraft surfaces. Of primary concern is the gust load or lift created by the main rotor or rotors. The lift increment of the horizontal stabilizing surface and fuselage are generally negligible when compared to the rotor and may be neglected for the rotorcraft gust load determination if proven negligible by analysis.

(iv) The rotorcraft shall be assumed in stabilized level flight prior to meeting the gust.

(v) The gust velocity may be assumed uniform across the rotorcraft.

(vi) Gust loads on the stabilizing surfaces are required as stated in paragraph AC 29.413.

(2) The rotorcraft design maneuvering load factors may generally exceed the design gust load factors calculated in compliance with this rule. This may be attributed to the small incremental change in lift due to the 30 FPS gust. Nonetheless, design gust loads for the rotorcraft shall be calculated as specified in the rule to assure the rotorcraft maneuvering load factors do, in each case, exceed the design gust load factor.

(3) For further information about rotorcraft gust response characteristics, see Paper No. 9 presented at the AHS/NASA - Ames Specialist's Meeting on Rotorcraft Dynamics, February 13-15, 1974. The paper, entitled, "Helicopter Gust Response

Characteristics Including Unsteady Aerodynamics Stall Effects," was written by P.J. Arcidiacono, R.R. Berquist, and W.T. Alexander, Jr. References listed in the paper may be helpful also.

AC 29.351. § 29.351 YAWING CONDITIONS.

a. Explanation. The rule requires proof of a rotorcraft "structural" yaw or sideslip design envelope. This sideslip envelope must cover minimum forward speed or hover to V_H or V_{NE} , whichever is less. The rotorcraft must be structurally safe for the thrust capability of the directional control system.

(1) The rotorcraft structure must be designed to withstand the loads for the specified yaw conditions. The standard does not require a structural flight demonstration. It is a structural design standard.

(2) Maximum displacement of the directional control, except as limited by pilot effort (130 pounds; § 29.397(a)), is required for the conditions cited in the rule. A control system rate limiter or a yaw damper may be used. The total displacement is therefore a function of time as well as the maximum effort applied (130 pounds).

(i) At low airspeeds, 90° yaw (sideward flight) should be the design limit.

(ii) At high airspeeds, stabilized yaw angle (stabilized sideslip) must be substantiated as stated in the rule.

(iii) At high airspeeds, the maximum tail rotor thrust will be combined with the vertical (directional) stabilizer surface load, if a stabilizer is used, as specified by § 29.351(b)(1).

(iv) At high airspeeds, while the rotorcraft is in the sideslip condition, the directional control is then returned to the neutral position, attendant with the flight condition. The tail rotor thrust will be added to the restoring force of the vertical stabilizer.

(v) Both right and left yaw conditions should be proven.

(3) The tail rotor attachment structure must comply with § 29.403.

(4) The vertical stabilizing surface must also comply with § 29.413.

b. Procedures.

(1) Many of the current single main rotor rotorcraft designs have vertical (directional) stabilizing surfaces. These surfaces may be solely vertical stabilizing fins as on the Bell Model 206, or a swept vertical extension of the tail boom as on the Hiller

Model FH1100. The Hiller FH1100 tail surface houses the tail rotor drive shaft and the tail rotor output gearbox.

(i) For vertical stabilizers, the airloads may be assumed independent of the tail rotor thrust.

(ii) For vertical stabilizers that house the tail rotor output gearbox, such as the Hiller Model FH1100, the tail surface air loads will add to or subtract from the tail rotor thrust according to the flight condition under consideration.

NOTE: For one example: At stabilized yaw to the right (left pedal depressed to limit) (§ 29.351(b)(2)), the tail rotor thrust moment should equal the restoring moment of the tail boom, vertical stabilizer and main rotor torque. As stated by § 29.351(b)(3), the tail rotor thrust moment then is added to the vertical stabilizer restoring moment. The addition of tail rotor thrust (§ 29.351(b)(3)) and vertical stabilizer load is generally one of the critical design conditions for the fuselage/tail boom.

(iii) For vertical stabilizers or fins that have an offset incidence angle with respect to the rotorcraft axis, the vertical fin moment is added, or subtracted as applicable, to the tail rotor thrust moment. The condition stated in § 29.351(b)(1) may result in adding the fin load to the tail rotor thrust.

(iv) Low airspeed maneuvers, such as sideward, rearward, and hover turns over a spot, typically impose insignificant aerodynamic loads on the fuselage and/or tail boom. The aerodynamic loads at V_H or V_{NE}, whichever is required, are generally the significant aerodynamic design loads.

(v) A rational assessment of the various yaw conditions may be used to reduce the load deviation and analysis to the critical rotorcraft design conditions.

(vi) The rotorcraft structure shall be analyzed or tested for loads derived from the critical design conditions.

(vii) A simple structural design envelope may be derived from these design data. If the right or left yaw limits are not very different, common, conservative design limits may be used. A sample yaw/forward speed diagram, as derived from design analysis of the characteristics of a hypothetical rotorcraft, is presented in figure AC 29.351-1. A table of values would also suffice. This figure reflects characteristics which include a 90° yaw when the directional control inputs are applied at low airspeeds (up to 30 knots presumably the maximum sideward flight speed of which this aircraft is capable) and 10° yaw when they are applied at V_H, with a straight line variation from 30 knot forward speed to V_H.

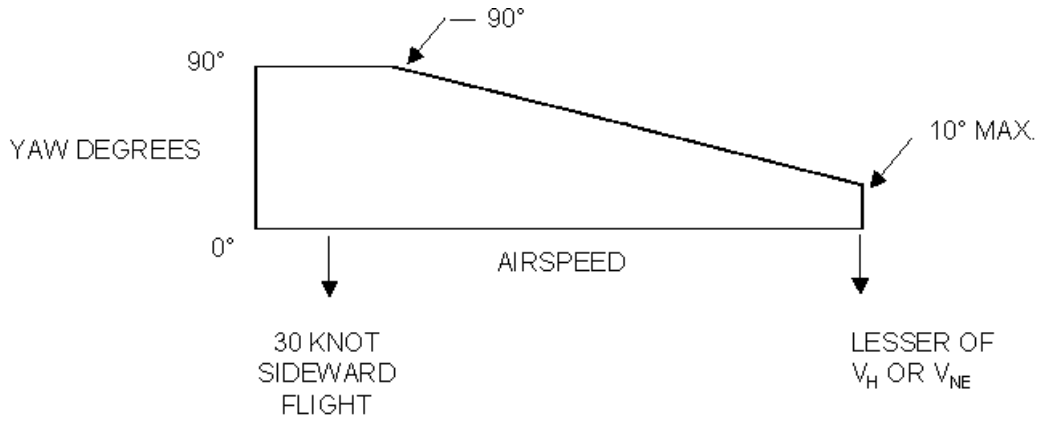

FIGURE AC 29.351-1 SAMPLE YAW/FORWARD SPEED DIAGRAM

(viii) During flight test evaluations, yaw angles have been measured using a yaw angle probe (swiveling vane type) on a nose boom. Both a visual readout for the pilot and a record, such as an oscillograph trace, have been used. This test may be conducted in the flight test program or in the flight load survey program. This record should confirm the yaw angle used in design as conservative with respect to operational and actual flight characteristics. This test is not a requirement however.

AC 29.351A. § 29.351 (Amendment 29-30) YAWING CONDITIONS.

a. Explanation. Amendment 29-30 adds maximum sideslip angles to the existing § 29.351 for structural design purposes. The standard should apply to power-on conditions; not power-off, since V_H is a part of the standard. For airspeeds up to 0.6 V_{NE}, sideslip angles larger than 90° (or sideward flight) need not be considered. For airspeeds at V_{NE} or V_H (whichever is less), sideslip angles larger than 15° need not be considered.

b. Procedures.

(1) All of the policy material pertaining to this section remains in effect with the addition of the maximum sideslip limits of 90° and 15° specified above. The rotorcraft does not need to be capable of attaining these conditions. A revised yaw/forward speed diagram is presented in figure AC 29.351-2.

(2) FAR § 29.351(b)(1) incorrectly references § 29.395(a) for maximum pilot forces. The correct reference should be § 29.397(a).

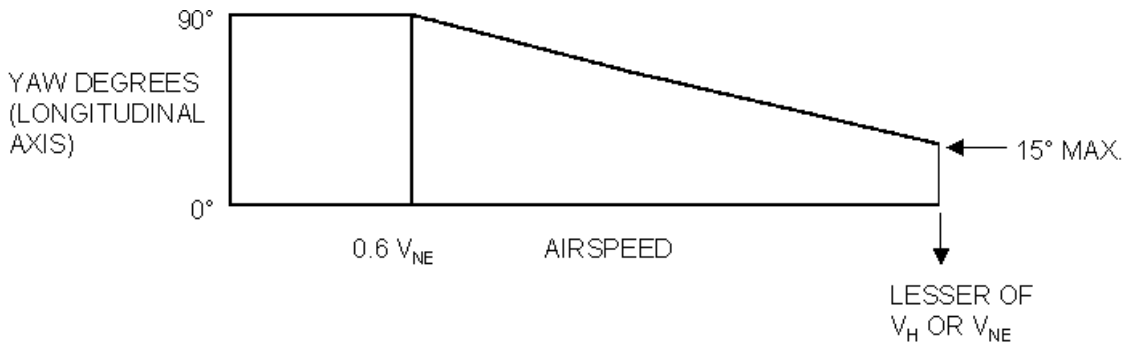

FIGURE AC 29.351-2 SAMPLE YAW/FORWARD SPEED DIAGRAM

AC 29.351B. § 29.351 (Amendment 29-40) YAWING CONDITIONS.

a. Explanation. Amendment 29-31 deleted FAR § 29.403 and § 29.413 since the references and requirements are adequately addressed in §§ 29.337, 29.339, and 29.341. Paragraphs AC 29.403 and AC 29.413 are retained as guidance information.

b. Procedures. All of the policy material pertaining to this section remains in effect except for references to §§ 29.403 and 29.413 in paragraphs AC 29.351a(3) and a(4).

AC 29.361. § 29.361 (Amendment 29-26) ENGINE TORQUE.

a. Explanation.

(1) The rotorcraft should be designed for limit engine torque values, as prescribed by the rule, to account for maximum engine torque, including certain transients and torsional oscillations. The rule recognized that reciprocating (piston) engines generate higher torque oscillations than turbine engines.

(i) A factor of 1.25 applies to maximum continuous power for turbine engines. Section 29.923 refers to torque output and § 29.927(b) refers to other torque output conditions for use in an “endurance test.”

(ii) Torque factors are also specified for reciprocating engines having two or more cylinders in § 29.361(a)(2) or § 29.361(b) of Amendment 29-26. The appropriate torque factor applies to takeoff power torque as well as maximum continuous power and other power conditions.

(2) Amendment 29-26 introduced additional turbine engine installation considerations for the following:

(i) Engine torque loads associated with emergency operation of governor-controlled turboshaft engines.

(ii) Torque reaction loads from sudden turbine engine stoppage which is applied to the engine and the engine suspension and restraint system.

(3) Paragraph AC 29.549 concerns § 29.549(c) and (e) that contains design standards for engine mounts and adjacent structure for flight and landing and also flight with 2 ½-minute OEI power rating. Amendment 29-26 added OEI power to the standard.

(4) Section 29.547(e)(1)(ii) concerns the application of limit engine torque to design of the main rotor structure.

b. Procedures.

(1) The engine torque associated with the maximum continuous power condition should be multiplied by the appropriate torque factor to obtain the engine torque value used for structural substantiation purposes of the rotorcraft.

(2) The torque values associated with the minimum power-on RPM limit should be used. Maximum power-on speed limit will result in a lower torque value when calculating torque from design horsepower values. However, due to piston engine power output characteristics, an engine may produce a higher torque at higher engine speeds contrary to the previous statement. The torque factor should account for this characteristic.

(3) For turbine engines limit torque values are determined for the four cases cited. Two cases are related to “endurance” test standards.

(4) For sudden stoppage of turbine engines the engine manufacturer can reasonably provide engine rotating inertia and deceleration time expected in the event of sudden engine stoppage which generates these critical loads in the engine mounting and restraint system. These manufacturer’s data should be acceptable for use in complying with this part of the design standard.

SUBPART C - STRENGTH REQUIREMENTS

CONTROL SURFACE AND SYSTEM LOADS

AC 29.391. § 29.391 CONTROL SURFACE AND SYSTEM LOADS - GENERAL.

a. Explanation. This general rule concerns requirements for design loads of tail rotors, control or stabilizing surfaces, and their control system.

b. Procedures. The design criteria and/or the design loads report must contain the loads dictated by the referenced rules. See paragraphs AC 29.395, AC 29.397, AC 29.399, AC 29.401, AC 29.403, AC 29.411, and AC 29.413.

AC 29.391A. § 29.391 (Amendment 29-30) CONTROL SURFACE AND SYSTEM LOADS - GENERAL.

a. Explanation. Amendment 29-30 adds an explicit reference to § 29.427, Unsymmetrical Loads (paragraph AC 29.427), to clarify that substantiation for unsymmetrical loads is a general control surface requirement. A reference to § 29.399, Dual Control System (paragraph AC 29.399), is also added for clarification. In addition, §§ 29.401, 29.403, 29.413 were removed by this amendment since these references and requirements were adequately addressed in other standards.

b. Procedures. The referenced AC paragraphs become AC 29.395, AC 29.395A, AC 29.397, AC 29.399, AC 29.411, and AC 29.427.

AC 29.395. § 29.395 CONTROL SYSTEM.

a. Explanation. Control system design loads and the application of these loads are contained in this rule.

(1) Paragraph (a) of the rule specifies the way or means of reacting the design loads specified in §§ 29.397 and 29.399 (for dual control systems). The design loads must be imposed on any locks and stops and irreversible mechanisms in the control system. Both rotor blade horns and control surface horns must react without failure, the specified loads while the controls are in critical positions.

(2) Paragraph (b) of the rule specifies application of limit pilot forces or of the maximum loads that can be obtained in normal operation, including any single power boost system failure, whichever is greater. However, minimum limit pilot force 0.60 of the loads specified in §§ 29.397 and 29.399, may be used, as specified, in parts of the primary control system that are not stiff enough to react to the loads specified in the first part of Paragraph (b) of the rule. Note the objective for a rugged control system.

(3) Control system design feature and test requirements are found in §§ 29.671 through 29.695. Bearing factors and fitting factors are specified in §§ 29.623 and 29.625, respectively.

b. Procedures.

(1) The design criteria and/or a design loads report that includes the primary control system design loads should be submitted for FAA/AUTHORITY approval.

(2) The rotorcraft control system may be tested to ultimate design loads or may be analyzed for the ultimate design loads. See paragraph AC 29.307.

(i) It is advisable that the applicant prepare a proposal describing the procedures and techniques to be used in the static testing of the control system which reflects compliance with the condition specified. It is further advisable that the FAA/AUTHORITY concur that the tests proposed achieve that objective. Omission of these steps may result in the need for retesting. The test results should be documented.

(ii) If tests are not conducted, a structural analysis of the control system is required. Appropriate factors from §§ 29.685(e), 29.623, and 29.625 must be used as specified. A structural analysis report should be used to document compliance with § 29.685(d)(1) and (4), and § 29.685(f).

(3) If a part of the control system is not stiff or rigid enough to react the design loads specified in § 29.397, that part of the system may be substantiated for lower loads as prescribed.

(i) The limit design loads are those loads specified in § 29.397;

(ii) The limit design loads are the maximum that can be obtained in normal operation, including any single power boost system failure, except for objectives stated for a rugged system; and

(iii) In lieu of a rational analysis, the limit design loads may be 0.60 of the loads specified in § 29.397.

(iv) For example, if a control surface servo tab or a small elevator is a part of the rotorcraft design, the control system for this part must be stiff enough to react the control surface loads without failure and to provide enough surface deflection to control the rotorcraft. These limit loads may be 60 pounds fore and aft and 40 pounds laterally on the cyclic control stick in lieu of a rational analysis and may be the maximum loads that can be obtained in normal operation.

(v) If a hydraulic power actuation or boost system is part of the rotorcraft design, the design limit load for the affected parts of the control system will be the

maximum output force of the boost at normal operating pressure added to the limit design loads resulting from the loads specified in § 29.397. If a single failure in the power portion of the hydraulic system results in actuator forces that exceed the maximum output force at normal operating pressure, the highest output loads must be used as noted in subparagraph (3)(ii). This hydraulic system failure standard is specified in § 29.695(a)(1) as well.

(4) Controls proof and operation test is required by §§ 29.307(b), 29.681, and 29.683. This test is conducted using the design limit loads approved under § 29.395(b). See paragraphs AC 29.681 and AC 29.683.

AC 29.395A. § 29.395 (Amendment 29-30) CONTROL SYSTEM.

a. Explanation. Amendment 29-30 clarifies that the loads in § 29.395(b) apply to power “control” systems not just power “boost” systems; and the limit pilot forces prescribed in § 29.397 are required to be applied in conjunction with the forces from normally energized power devices. The amendment may increase required loads for systems if operational loads may be exceeded through jamming, ground gusts, control inertia, or friction. If so, the system is required to withstand 100 percent of limit pilot forces specified in § 29.397, rather than 60 percent of the limit pilot forces as specified previously.

b. Procedures. The procedures of paragraph AC 29.395 continue to apply except that the increased loads in new paragraph § 29.355(b)(4) of 100 percent of limit pilot forces are specified for systems where operational loads may be exceeded by jamming, ground gusts, control inertia, or friction.

AC 29.397. § 29.397 (Amendment 29-12) LIMIT PILOT FORCES AND TORQUES.

a. Explanation. Design forces are contained in the rule.

(1) Primary controls, pilot and copilot, must be designed for the limit pilot forces specified in paragraph (a) of the rule.

(2) For other operating controls, such as flap, tab, stabilizer, rotor brake, and landing gear, design limit forces are specified in paragraph (b) of the rule.

b. Procedures.

(1) Design loads specified in the rule must be used in required structural tests and in any structural strength analysis of the control systems submitted in compliance with other rules.

(2) Operation tests of the control systems noted in other rules require application of these forces also.

AC 29.399. § 29.399 DUAL CONTROL SYSTEM.

a. Explanation. Design limit loads are specified for dual control systems. Pilot effort forces applied in opposition and in the same direction are required for dual control systems.

b. Procedures.

(1) Design loads specified in the rule must be used in required structural tests and in any structural strength analysis submitted for compliance with the other rules.

(2) Operation tests of the control systems, noted in other rules, require application of these forces also.

AC 29.401. § 29.401 (Amendment 29-4) AUXILIARY ROTOR ASSEMBLIES.

a. Explanation.

(1) For rotorcraft equipped with auxiliary rotors, normally called tail rotors, an endurance test is required by § 29.923 and structural strength substantiation is required. Section 29.401(b) specifically refers to structural strength substantiation for centrifugal loads resulting from maximum design rotor RPM. Due to the pitch feathering requirements, auxiliary rotors typically have detachable blades.

(2) The rotor blade structure must have sufficient strength to withstand not only aerodynamic loads generated on the blade surface, but also inertial loads arising from centrifugal, coriolis, gyroscopic, and vibratory effects produced by this blade movement. Sufficient stiffness and rigidity must be designed into the blades to prevent excessive deformation and to assure that the blades will maintain the desired aerodynamic characteristics. As a design objective, the structural strength requirements should be met with the minimum material. Excess blade weight imposes extra centrifugal loads that may increase the operating stress levels. Blade weight and strength should be optimized. Even though a structural strength analysis for the blade design loads is required, a flight load survey and fatigue analysis are also required by § 29.571.

(3) Section 29.1509 defines the design rotor speed as that providing a 5 percent margin beyond the rotor operating speed limits.

b. Procedures.

(1) The endurance tests prescribed by §§ 29.923 and 29.927 require achieving certain speeds, power, and control displacement for the auxiliary (tail) rotor as well as the main rotor. The parts must be serviceable at the conclusion of the tests.

(2) Structural substantiation of the auxiliary (tail) rotor is required to assure integrity for the minimum and maximum design rotor speeds and the maximum design rotor thrust in the positive and negative direction. Thrust capability of the rotor should offset the main rotor torque at maximum power as required by § 29.927(b).

(i) The maximum and minimum operating rotor speed, power-off, is 95 percent of the maximum design speed and is 105 percent of the minimum design speed, respectively.

(ii) The rotor operating speed limits shown during the official FAA/AUTHORITY flight tests must include the noted 5 percent margin with respect to the design speeds.

(iii) The auxiliary rotor generally has a positive and negative pitch limit that assures adequate directional control throughout the operating range of the rotorcraft. The power-off rotor speed limits are generally broader than the power-on rotor speed limits because of the required autorotational rotor speed characteristics. Thus, the auxiliary rotor design conditions concern the maximum and minimum design rotor speeds in conjunction with the maximum positive or negative pitch thrust as appropriate. Thrust capability and precone angle of the rotor, if any, will significantly influence the rotor design loads. The variations in rotor design features and an example of substantiation would be too lengthy to include here. However, ANC-9, “Aircraft Propeller Handbook,” contains principles that may be applied to tail rotor designs. Tail rotors may be considered a special propeller design.

(iv) Bearings are generally used in the tail rotor installation to allow flapping and feathering motion of the blades. The bearings manufacturer’s ratings of these bearings must not be exceeded. Bearings generally used in main and tail rotors are classified as ABEC Class 3, 5, or 7. Class 7 is the highest quality presently available. Satisfactory completion of the endurance tests of §§ 29.923 and 29.927 is a means of proving that use of a particular bearing is satisfactory.

(v) The analysis must include appropriate special factors, casting factors, bearing factors, and fitting factors prescribed by §§ 29.619, 29.621, 29.623, and 29.625, respectively. The fitting factor of 1.15 must be applied in the analysis of the tail rotor installation.

AC 29.401A. <u>§ 29.401 (Amendment 29-31) AUXILIARY ROTOR ASSEMBLIES</u>.

a. <u>Explanation</u>. Amendment 29-31 removed this section since the requirements are adequately addressed in §§ 29.337, 29.339, and 29.341.

b. <u>Procedures</u>. The policy material pertaining to this section is retained as supplemental information.

AC 29.403. § 29.403 AUXILIARY ROTOR ATTACHMENT STRUCTURE.

a. Explanation.

(1) The auxiliary rotor attachment structure(s), which is considered to include gear boxes, must be designed to withstand design limit loads that occur in flight and on landing. These design loads that generally consist of the following must be established for the particular flight and landing condition under consideration.

(i) Inertia loads generated by linear and angular accelerations of the auxiliary rotors and their gear boxes, combined with

(ii) Thrust and torque loads developed by the auxiliary rotors.

The linear and angular acceleration loads imposed by the weight of the tail rotor and gearbox are generally derived from airframe loads data. Thrust and torque output of the tail rotor are derived during external aerodynamic and landing loads development for pertinent flight and landing conditions.

(2) General rules related to proof of structure loads and factor of safety are §§ 29.307, 29.301, 29.303, and 29.305.

b. Procedures.

(1) The angular and linear acceleration loads combined with appropriate tail rotor thrust and torque for the critical conditions shall be imposed on the tail rotor gearbox mount lugs, the airframe mounting structure, and the attaching hardware.

(2) The yaw and maximum power climb conditions are generally critical. Landing and maneuvering conditions with and without power may also impose high inertia and rotor thrust and torque loads on the attachment structure.

(3) The derivation of the loads and conditions are too extensive to include here. Additional information can be found in the U.S. Army Material Command Report AMCP 706-201, “Engineering Design Handbook: Helicopter Engineering, Part One, Preliminary Design.”

AC 29.403A. § 29.403 (Amendment 29-31) AUXILIARY ROTOR ATTACHMENT STRUCTURE.

a. Explanation. Amendment 29-31 removed this section since the requirements are adequately addressed in §§ 29.337, 29.339, and 29.341.

b. Procedures. The policy material pertaining to this section is retained as supplemental information.

AC 29.411. § 29.411 GROUND CLEARANCE: TAIL ROTOR GUARD.

a. Explanation.

(1) The rule requires specific protection to prevent the tail rotor from contacting the landing surface during a normal landing if it is possible that the tail rotor will contact the surface. The rule states that it must be impossible for the tail rotor to contact the surface during a normal landing.

(2) If a guard is required, the guard and its supporting structure must withstand suitable design loads.

(3) Section 29.501(c)(1) contains skid landing gear drag requirements that may be applied to the guard design loads.

b. Procedures.

(1) The applicant may submit sketches or drawings showing probable clearance with typical level landing surfaces during normal landings. Typical attitudes such as nose high autorotation, or autorotation with power-on landing, or other possible tail low attitudes should be investigated. If the drawings or sketches reveal that it is not likely the tail rotor will contact the landing surface, this minimum clearance with the landing surface may be confirmed during official FAA/AUTHORITY flight tests, such as HV and landing tests. The clearance may be confirmed by having a frangible device of suitable length (i.e., a balsa wood dowel) extending beyond the guard and attached to the tail rotor guard or other appropriate fuselage part. If the device is not damaged, broken, or no contact is made with the surface, compliance has been demonstrated.

(2) If it is possible for the tail rotor guard to contact the landing surface suitable design loads must be established for the guard. ANC-2a dated March 1948, “ANC Bulletin Ground Loads,” paragraph 6.4, entitled “Tail Bumper Criteria,” is an acceptable means of deriving the rotorcraft kinetic energy that shall be absorbed by the guard. This method is noted here for convenience.

(i) The tail rotor guard shall be able to absorb the kinetic energy of the rotorcraft in its most unfavorable CG position in the tail down landing attitude. The kinetic energy that the tail rotor guard shall be capable of absorbing must be determined as follows:

$$KE = \frac{WV_S^2}{2g} \times \frac{K_Y^2}{(K_Y^2 + 1_B^2)}$$

where-- V_S = vertical speed ft/sec, derived from § 29.725(a)
K_Y = pitching radius of gyration - ft. from pitching axis
1_B = distance from most critical CG location to the guard or bumper contact point - ft.
W = gross weight less rotor lift from § 29.473(a) - lbs.
G = 32.2 ft./sec^2

(ii) Other, more recent, analytical techniques (most utilizing computer programs) may, of course, be used rather than the ANC-2a means after proper substantiation for applicability and validity.

(iii) The tail rotor guard shall not fail when the limit and ultimate load, which is derived from a combination of the limit kinetic energy and the guard resulting limit deflection required to dissipate the energy, is imposed on the guard and the rotorcraft tail (see § 29.305).

(3) Substantiation of the guard, skid, or bumper for the design loads derived may be accomplished by test or analysis as stated in § 29.307(a).

(4) Several rotorcraft tail rotor guards are installed solely for the protection of ground personnel from the rotating tail rotor. For guards installed for this purpose, the applicant should use prudent and reasonable design loads and features. Such guards should not present a hazard to the rotorcraft because of its design features.

AC 29.413. <u>§ 29.413 STABILIZING AND CONTROL SURFACES</u>.

a. <u>Explanation</u>. Minimum design loads are specified for stabilizing as well as control surfaces.

(1) Paragraph (a) of the rule requires application of minimum empirical design loads, application of critical maneuvering loads, and application of critical maneuvering loads combined with vertical or horizontal gust loads (30 feet per second per § 29.341).

(2) Paragraph (b) requires load distributions that closely simulate actual pressure distributions. Both spanwise and chordwise distributions are intended.

(3) These surfaces are used for stability and control thereby hopefully extending the CG range and increasing the airspeed of modern designs.

(4) To “closely simulate actual pressure condition” on the surfaces, unsymmetrical loads are also required on horizontal surfaces. An arbitrary distribution, if conservative, may be used.

(5) It is noted § 29.571 requires fatigue substantiation of the flight structure which will include control and stabilizing surfaces.

(6) If the surface is controllable, a proof and operation test of the surface control system is required by §§ 29.681 and 29.683.

b. Procedures. Modern rotorcraft designs have generally employed a fixed or a wholly movable, not split or divided, stabilizing or control surface.

(1) Design Loads.

(i) Limit loads of 15 pounds per square foot will apply up to approximately 90-knot design airspeed. Above a 90-knot design airspeed (V_D), the coefficient (C_N = 0.55) imposes higher limit loads on the surface.

(ii) In addition, combined maneuvering and gust loads may impose the highest limit loads on the control surfaces of rotorcraft. This is attributed to the increase in speed (horizontal gust) and to the change in angle of attack and change in airspeed (vertical gust). Imposing the horizontal gust (30 feet per second or 17.8 knots) on the surface in combination with 130-knot design speed results in a 30 percent increase in the design load. The gust conditions cause a significant increase in design loads due to a change in angle of attack, with a change in resultant airspeed, or due to the increase in airspeed.

(iii) The applicant may choose to derive the limit loads using maximum aerodynamic coefficients for the surface under consideration at the maximum design airspeed combined with a 17.8-knot gust. This would be acceptable provided these design loads exceed the minimum loads derived from a C_N = 0.55 at design airspeed or exceed 15 pounds per square foot load on the surface.

(2) The load distribution on the surface should closely simulate actual pressure distributions.

(i) The spanwise load may be rectangular or other acceptable conservative distributions may be used. The method developed by O. Schrenk in NACA TM 948, 1940, is an acceptable method for approximation of spanwise distribution.

NOTE: The method is valid for aspect ratios of 5 to 12 and for rectangular planforms such as used on rotorcraft, other planforms may be acceptable as prescribed in the TM.

(ii) The chordwise distribution appropriate for the aerodynamic shape should be used.

(iii) The flight load survey conducted under § 29.571 may be used to confirm design parameters and possible load distribution data. On controllable surfaces, the pitching moment (control loads) is measured for fatigue substantiation of the control system. The control stabilizing surfaces are subject to loads measurement and possible fatigue tests for fatigue substantiation also.

(3) Proof of the structure for the required loads is specified in §§ 29.301, 29.303, 29.305, and 29.307. Tests or analysis may be used as prescribed. If analysis is used, fitting factors and other appropriate factors prescribed by the rules of §§ 29.625, 29.621, and 29.623 will be required in the analysis.

AC 29.413A. § 29.413 (Amendment 29-31) STABILIZING AND CONTROL SURFACES.

a. Explanation. Amendment 29-31 removed this section since the requirements are adequately addressed in §§ 29.337, 29.339, and 29.341.

b. Procedures. The policy material pertaining to this section is retained as supplemental information especially as reference material for paragraph AC 29.341 (§ 29.341).

AC 29.427. § 29.427 (Amendment 29-31) UNSYMMETRICAL LOADS.

a. Explanation. Amendment 29-30 added the standard and Amendment 29-31 amended it. Minimum unsymmetrical design loads are specified for horizontal tail surfaces and also vertical tail surfaces whenever they support the horizontal tail surfaces.

(1) Loads are derived by rational analysis, or for earlier certification bases, the prescribed empirical loads of § 29.413 may be used. Section 29.413 was removed by Amendment 29-31 since the requirements are adequately addressed in §§ 29.337, 29.339, and 29.341.

(2) Rational loads, appropriate for the aerodynamic surfaces, should be distributed according to the standard.

(3) When vertical tail surfaces support the horizontal tail surfaces, the vertical tail surfaces and supporting surfaces are required to support the critical combination of vertical and horizontal surface loads distributed as shown.

b. Procedures. Two basic loading conditions are required by § 29.427 for each of the two basic empennage configurations shown.

(1) Horizontal surfaces supported by the tail boom or fuselage. Structural substantiation should be provided for all six combinations shown in figure AC 29.427-1. All of these empirical loading distributions should be used unless rational analysis shows one or more of each set of conditions to be non-critical or equal or more realistic distributions are substantiated. Rectangular spanwise air load distribution should be used unless more rational distribution is substantiated. If end plates are used, the air loads should be distributed accordingly.

(i) First unsymmetrical loading condition:

(A) 100 percent of the flight load is applied to one side of the plane of symmetry; and 0 percent of the flight load is applied on the other side of the plane of symmetry.

(B) For surfaces with end plates or other similar devices, the load distribution will be changed accordingly.

(ii) Second unsymmetrical loading condition:

50 percent of the flight load on one side of the plane of symmetry acting up; and
50 percent of the flight load on the other side of the plane of symmetry acting down.

(2) Horizontal surfaces supported by a vertical surface. Structural substantiation should be provided for all six combinations shown in figure AC 29.427-2. All of these empirical loading distributions should be used unless rational analysis shows one or more of each set of conditions to be non-critical or equal or more realistic distributions are substantiated. Rectangular spanwise air load distribution should be used unless more rational distribution is substantiated. If end plates are used, the air loads should be distributed accordingly.

(i) First unsymmetrical loading condition:

100 percent of the flight load on one side of the plane of symmetry; and 0 percent of the flight load on the other side of the plane of symmetry.

(ii) Second unsymmetrical loading condition:

50 percent of the flight load on one side of the plane of symmetry acting up; and
50 percent of the flight load on the other side of the plane of symmetry acting down.

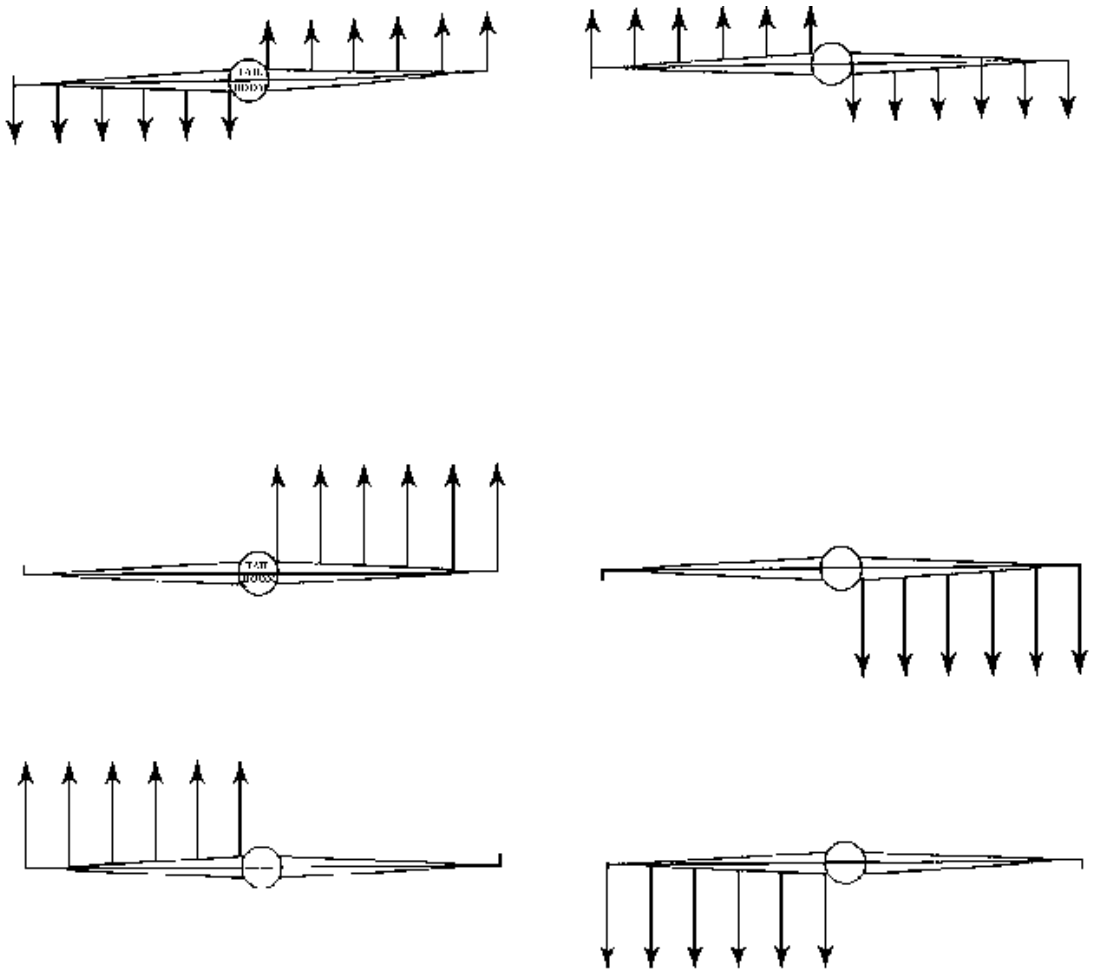

Figure AC 29.427-1 (View Looking Forward)

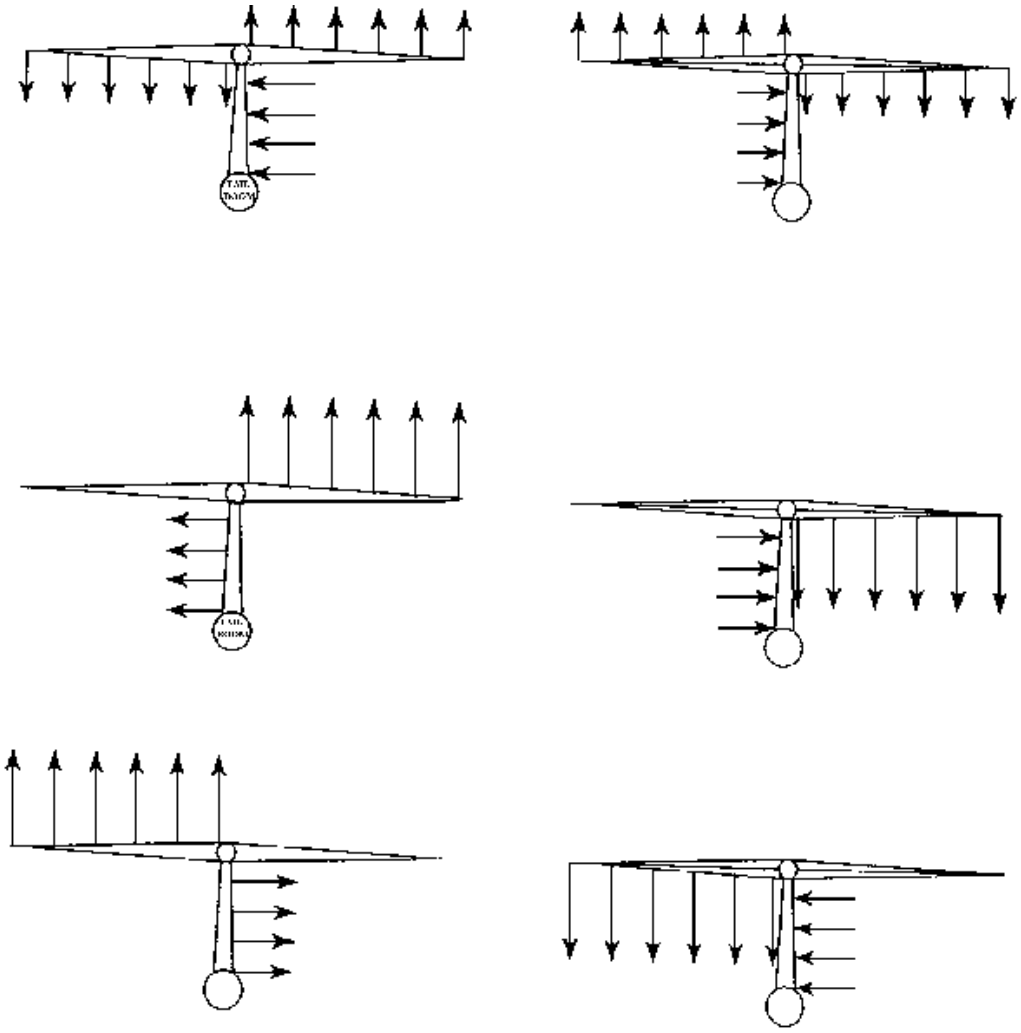

Figure AC 29.427-2 (View Looking Forward)

SUBPART C - STRENGTH REQUIREMENTS

GROUND LOADS

AC 29.471. § 29.471 GROUND LOADS - GENERAL.

a. Explanation. This regulation specifies that limit ground loads must be considered which are:

(1) External loads caused by landing (ground) conditions and by ground taxiing loads as specified in § 29.235.

(2) Loads considering the rotorcraft structure as a rigid body.

(3) Loads in equilibrium with linear and angular inertia loads.

(4) The critical center of gravity "must be selected so that the maximum design loads are obtained in each landing gear element."

b. Procedures.

(1) The standards to be considered are specified in §§ 29.473 through 29.511. These associated standards cover landing gear arrangements, landing conditions, and ground handling conditions.

(2) Drop tests are required for determination of landing load factors. See paragraph AC 29.723.

(3) The application of the design loads derived from the landing load factors will be as specified for each element affected by landing or ground handling loads.

(4) During the applicant's flight test program, the ground, landing, and taxiing load factors may be monitored to assure the design load factors used are adequate. See paragraph AC 29.235 for § 29.235 guidance.

AC 29.473. § 29.473 (Amendment 29-3) GROUND LOADING CONDITIONS AND ASSUMPTIONS.

a. Explanation. The rotorcraft is to be designed for the maximum weight. A rotor lift of two-thirds of the design maximum weight may be used. The minimum limit landing load factor is determined by the drop tests of § 29.725. Provisions are made for supplementary energy absorption devices that have triggering mechanisms.

b. Procedures. Loads for the landing conditions are derived considering mass (equal to the maximum weight) and rotor lift (equal to two-thirds of the maximum weight) acting through the center of gravity throughout the landing impact. Unbalanced

external loads resulting from asymmetric loading conditions are reacted as specified in the individual subparagraphs.

NOTE: If supplementary energy absorption devices are used, neither they nor their triggering devices may fail under the loads established by the limit drop tests or the reserve energy absorption drop tests.

AC 29.475. § 29.475 TIRES AND SHOCK ABSORBERS.

a. Explanation. This section specifies the tire and shock absorber position to be used in ground load derivations.

b. Procedures. Ground loads are to be derived with the tires in static (1g) position and the shock absorbers “in their most critical position.” The determination of the “most critical position” for the shock absorbers generally requires a load versus deflection test or analysis of the shock absorber system and a determination of the effect of both load and deflections on the shock absorber, attachment structure, and substructure designed by ground loads.

AC 29.477. § 29.477 LANDING GEAR ARRANGEMENT.

a. Explanation. This section specifies the individual standards to be used for ground load conditions for rotorcraft having two wheels aft and one or more wheels forward of the center of gravity.

NOTE: § 29.497 gives ground loading conditions for landing gear with tail wheels, and § 29.501 gives ground loading conditions for landing gear with skids.

b. Procedures. The ground loading conditions of §§ 29.235, 29.479 through 29.485, and 29.493 will be used for rotorcraft having two wheels aft and one or more wheels forward of the center of gravity. This includes forward wheels on separate axles.

AC 29.479. § 29.479 LEVEL LANDING CONDITIONS.

a. Explanation. This section provides explicit level landing load criteria for landing gear with two wheels aft and one or more wheels forward of the center of gravity.

(1) Level landings--

(i) Each wheel contacting the ground simultaneously; and

(ii) Aft wheels contacting the ground with forward wheels just clear of the ground.

(2) Application of loads--

(i) Maximum design vertical loads applied alone;

(ii) The maximum design vertical loads applied with a drag load of at least 25 percent of the vertical load (applied at the ground contact area); and

(iii) The vertical load at the instant of peak drag load in conjunction with the peak drag load. A ground speed and load application is specified.

(3) A 40 percent/60 percent load distribution between wheels for configurations having two forward wheels including quadricycle. This distribution between wheels on a common axis is to be applied for the conditions of vertical loads only, and for vertical loads combined with drag loads of 25 percent of the vertical loads. Section 29.511 concerns a 60 percent to 40 percent ground load distribution between multiple-wheel units. See paragraph AC 29.511 for dual wheels on a common axle or axis.

(4) Aircraft pitching moments are to be reacted by the forward landing gear or by the angular inertia forces when the forward landing gear is clear of the ground as specified.

b. Procedures.

(1) The specified loading conditions will be used in load derivations.

(2) The critical center of gravity condition will be used for each gear and gear support structure.

(i) The aft center of gravity condition with the forward gear clear will normally be critical for the aft gear and gear supports.

(ii) The forward center of gravity condition with each gear contacting the ground simultaneously will normally design forward gear elements critical for vertical loads.

(iii) The forward center of gravity condition with the forward gear clear may result in high load factors, angular plus linear, that will greatly affect security of items of significant mass.

(3) The vertical load, at the instant of peak drag load combined with the peak drag component, can be determined from drop tests utilizing wheel spin-up or it can be analytically determined. If analysis is used, it must successfully correlate with the results of a previous well-instrumented test program.

AC 29.481. § 29.481 TAIL-DOWN LANDING CONDITIONS.

a. Explanation. This section provides the criteria for tail-down landing conditions, i.e., “the maximum nose-up attitude allowing ground clearance” with ground loads acting “perpendicular to the ground.”

b. Procedures.

(1) The tail-down landing condition will be used to check (by analysis or test) for criticality of landing gear or support structure. This attitude generally creates the highest forward loads on the landing gear in combination with vertical loads.

(2) The tail-down landing condition may be the critical condition for both landing load factor and for energy absorption by the main gear. Section 29.725 requires that “each landing gear must be tested in the attitude simulating the landing condition that is most critical.” Where questions exist as to the critical attitude, both level landing and tail-down landing attitudes should be used in drop tests required by § 29.725.

AC 29.483. § 29.483 ONE-WHEEL LANDING CONDITIONS.

a. Explanation. This section gives the condition to be used for one-wheel landing conditions. Only the vertical load condition of § 29.479(b)(1) is required.

b. Procedures. The one-wheel landing condition is generally critical for the landing gear-to-fuselage attachments and the landing gear elements between the attachments. Unbalanced external loads are reacted by rotorcraft inertia. Large items of mass located radially from the center of gravity (aircraft centerline may be used) should also be structurally substantiated for the combined rolling (angular) and linear accelerations of this loading condition.

AC 29.485. § 29.485 LATERAL DRIFT LANDING CONDITIONS.

a. Explanation.

(1) This section provides the loading conditions which impose side (and vertical) loads on the landing gear. A level landing attitude is specified. Two main conditions required are--

(i) Only the aft wheels in contact with the ground; and

(ii) All wheels contacting the ground simultaneously.

(2) Loads. The vertical loads to be applied with the side loads are specified as “one-half of the maximum ground reactions of § 29.479(b)(1).” These vertical loads are the level landing loads considering both contact and noncontact with the ground by the forward wheels.

(i) One side load condition is specified as “0.8 times the vertical reaction acting inward on one side and 0.6 times the vertical reaction acting outward on the other side” when only the aft wheels contact the ground.

(ii) The other side load condition (for all wheels contacting the ground) specifies the 80 percent inward/60 percent outward distribution for the aft wheels and 0.8 times (80 percent) the vertical reaction for the forward wheels.

b. Procedures. The loading conditions, as specified, are applied to the landing gear and attaching structure. The loads are applied at the ground contact point, except for full swiveling gear which has the load applied at the center of the axle. In other words, full swiveling gear is considered to have swiveled to a static position under the side load before the design vertical and side loads are achieved. The landing gear backup structure, as well as the landing gear itself, will be substantiated for these side load conditions.

AC 29.493. § 29.493 BRAKED ROLL CONDITIONS.

a. Explanation. This section provides two loading conditions for ground braking operations. Specific vertical loads in conjunction with drag loads (due to braking) are to be considered. The limit vertical load factor is 1.33 for condition of all wheels in contact with the ground, and 1.0 for condition of aft wheels only in contact with the ground and nose wheel clear. The drag load on wheels with brakes is 0.8 times the vertical load or the drag load value based on limiting brake torque, whichever is less.

b. Procedures. The braking loads are calculated from the specified criteria with the shock absorbers in their static (normal) positions and with the drag loads applied at the ground contact point. Structural substantiation of the affected structure may be accomplished by test or analysis. If tests are used, the wheel and tire assembly is commonly replaced with a test fixture so the limit loads and static deflections specified can be more accurately controlled. The test specimen should be complete enough to assure that the landing gear structure and the attach and backup structure are adequately substantiated.

AC 29.497. § 29.497 GROUND LOADING CONDITIONS: LANDING GEAR WITH TAIL WHEELS.

a. Explanation. This section provides the loading conditions for landing gear designs with tail wheels.

(1) Level landings are to consider the following:

(i) All wheels (main and tail) contacting the ground simultaneously, as well as only forward main wheels contacting the ground.

(ii) Maximum design vertical loads applied alone.

(iii) The maximum design vertical loads combined with a drag load of at least 25 percent of the vertical loads for both conditions.

(2) Nose-up landings with only the rear wheel or wheels initially contacting the ground must be considered unless shown to be extremely remote.

(3) Level landings on one forward wheel only are to be considered. Drag loads are not required.

(4) Side load conditions are imposed on the main wheels and tail wheels for level landing attitudes. Criteria for full swiveling and locked tail wheels are included in this standard.

(5) Braked roll conditions are specified for the level landing attitudes.

(6) Rear wheel turning loads are also specified for swiveling and locked tail wheels.

(7) Taxiway condition loads for the landing gear and rotorcraft are those that "occur when the rotorcraft is taxied over the roughest ground that may reasonably be expected in normal operation." The aircraft design load factors should not be exceeded during the evaluation. Section 29.235 contains an identical standard that applies to all types of wheel landing gear.

b. Procedures.

(1) The specified loading conditions are to be used in load derivations.

(2) The critical center of gravity condition is used for each gear and gear support structure.

(i) The forward center of gravity condition with the tail gear clear will normally be critical for the forward gear and gear supports.

(ii) The aft center of gravity condition with the tail gear clear should be checked for criticality of security of large mass items located forward of the center of gravity. Vertical and angular accelerations are additive under this landing condition.

(iii) The aft center of gravity condition with each gear contacting the ground simultaneously will generally design tail gear elements critical for vertical loads. The other conditions are generally less severe but must be proven.

(3) For nose-up landing procedures use § 29.481. The reference to "extremely remote" in § 29.497(d)(2) predates current §§ 25.1309, 29.1309, and AC 25.1309.1.

This phrase has been used to require consideration of nose-up landings unless features of design are present which prevent nose-up landings or where such landings are unlikely during the life of the rotorcraft. See paragraph AC 29.481.

(4) Use § 29.483 for one-wheel landing procedures, paragraph AC 29.483.

(5) Use § 29.485 procedures for side load conditions, paragraph AC 29.485.

(6) Use § 29.493 procedures for braked roll conditions, paragraph AC 29.493.

(7) For rear wheel turning loads, swiveling of tail landing gears is allowed as in basic side load conditions. The side load is applied at the axle, or if the wheel is locked, the load is applied at ground contact. Rear wheels are loaded with the critical vertical static load in conjunction with an equal side load to substantiate the tail gear.

(8) Since the rotorcraft is to be designed for load factors that will not be exceeded during taxi tests or other conditions, an instrumented taxi test program will be necessary. Use § 29.235, paragraph AC 29.235.

AC 29.501. § 29.501 (Amendment 29-3) GROUND LOADING CONDITIONS: LANDING GEAR WITH SKIDS.

a. Explanation. This section provides the ground loading conditions for landing gear with skids. The loading conditions are similar to those for wheeled gear except for the following criteria which are unique to skid gears:

(1) Structural yielding (plastic deformation) of elastic spring members under limit loads is allowed.

(2) Design ultimate loads for elastic spring members need not exceed the loads obtained in a drop test with a drop height of 1.5 times the limit drop height. The rotorcraft and the landing gear attachments are subject to the prescribed design ultimate loads.

(3) The gear must be in its most critically deflected position (similar to § 29.475).

(4) Ground reactions are rationally distributed along the bottom of the skid unless otherwise specified. Paragraph (f) concerns specific “concentrated” and arbitrary load conditions.

(5) Drag loads are 50 percent of vertical reactions rather than the 25 percent for wheeled gear.

(6) Side loads are 25 percent of the total vertical reaction rather than the 60-80 percent for wheeled gear.

(7) Side loads are applied to one skid only (inward acting and outward acting) with resulting unbalanced moment resisted by angular acceleration.

(8) A ground reaction load of 1.33 times the maximum weight is to be applied at 45° from the horizontal axis:

(i) Distributed among or between the skids;

(ii) Concentrated at the forward end of the straight portion of the skid tube; and

(iii) Applied only to the forward end of the skid tube and its attachment to the rotorcraft.

(9) A concentrated vertical load equal to one-half of the design limit vertical load is to be applied at a point midway between the skid tube attachments.

b. Procedures.

(1) The specified loading conditions are to be used in load derivations.

(2) The critical center of gravity conditions are to be used for each gear and gear support structure. Asymmetry of the skid tubes, cross tubes, and gear attachments are to be considered in determining the critical center of gravity condition.

(3) The rotorcraft and landing gear attachment must be substantiated for ultimate landing loads by either test or analysis utilizing an ultimate load factor of 1.5 in accordance with § 29.303. The elastic spring members may be analyzed or static tested for ultimate loads (and deflections) using either a factor of safety of 1.5 or one associated with an “ultimate” drop height of 1.5 times the limit drop height. Substantiation by “ultimate” drop tests may be used provided all combinations of critical parameters are included in the total substantiation effort. This method will require a series of tests using several test specimens, or a limited number of drop tests plus further substantiations by static tests or analyses for additional critical conditions not covered by the drop test(s).

AC 29.501A. § 29.501 (Amendment 29-30) GROUND LOADING CONDITIONS: LANDING GEAR WITH SKIDS.

a. Explanation. Amendment 29-30 relaxes previous requirements in two cases by:

(1) Allowing the total sideload of § 29.501(d)(3) to be distributed “equally between skids” rather than being “applied along the length of one skid only;” and,

(2) Allowing the concentrated load of § 29.501(f)(2)(ii) to be distributed over 33.3 percent of the skid (between skid tube attachments) rather than being "concentrated at a point midway between the skid tube attachments."

b. Procedures. The previous procedures (through Amendment 29-19) continue to apply to Amendment 29-30 except for the use of the new load distributions.

AC 29.505. § 29.505 SKI LANDING CONDITIONS.

a. Explanation. This is an optional requirement for ski operations. The regulation specifies vertical loads, side loads, and torque loads (M_Z) to be applied to ski installations. The four loading conditions to be applied at the pedestal bearings are:

(1) Simultaneous application of Pn, up load, and Pn/4, horizontal load.

(2) Up load of 1.33 P.

(3) Side load of 0.35 Pn.

(4) Torque load of 1.33 P (in foot-pounds), about vertical axis through the centerline of the pedestal bearings.

NOTE: Where P is the maximum static weight on each ski and n is the limit load factor obtained from drop tests. The load factor obtained from wheel or skid landing gear drop tests may be used.

b. Procedures. Structural substantiation may be accomplished by static test or analysis using the specified loads. Skis generally have a limit load rating. The design loads derived for this standard must not exceed the rating. TSO-c28 concerns, in part, standards for aircraft skis.

AC 29.511. § 29.511 (Amendment 29-3) GROUND LOAD: UNSYMMETRICAL LOADS ON MULTIPLE-WHEEL UNITS.

a. Explanation. Two loading conditions are provided to account for unsymmetrical loads on multiple-wheel units due to landing and normal operations over crowned runways and taxiways and to account for deflated tires. They are:

(1) Sixty percent of total ground reaction applied to one wheel of a dual wheel unit and 40 percent to the other.

(2) Sixty percent of the "specified load for the gear unit" is applied to the wheel with an inflated tire when the other tire is deflated (the 60 percent load may not be less than the 1g static load).

NOTE: The 60:40 distribution also applies to nose wheel units as noted in § 29.479(b)(4).

b. Procedures. Structural substantiation may be accomplished by static test or analysis using the specified load. As provided by the standard, the total load on the gear units may neglect the transverse shift of the load centroid due to unsymmetrical load distribution; i.e., the external load for each gear may be calculated considering the same load centroid as with symmetrical wheel loads, and then the external load for each gear is divided in accordance with the distributions of § 29.511(a) and (b) between the wheels.

SUBPART C - STRENGTH REQUIREMENTS

WATER LOADS

AC 29.519. § 29.519 (Amendment 29-30) HULL TYPE ROTORCRAFT: WATER-BASED, AMPHIBIAN.

a. Explanation.

(1) This regulation provides design criteria for amphibian rotorcraft with hull provisions.

(2) The most severe wave heights for which approval is desired are to be considered. A minimum of sea state 4 condition wave heights should be considered (reference paragraph AC 29.801 for a description of sea state 4 conditions).

(3) A rotor lift of two-thirds of the rotorcraft weight may be applied during landing impact.

(4) Vertical landing conditions are specified as:

(i) Zero forward speed.

(ii) Likely pitch and roll attitudes.

(iii) Vertical descent velocity ≥ 6.5 FPS.

(5) Forward speed landing conditions are specified as:

(i) Forward velocities of zero to 30 knots (a 30-knot limit may be reduced if it can be demonstrated that the maximum forward velocity selected would not be exceeded in a normal one-engine-out landing).

(ii) Likely pitch, roll, and yaw attitudes.

(iii) Vertical descent velocity ≥ 6.5 FPS.

(6) Auxiliary float immersion conditions are specified to be applied unless it can be shown that full immersion is unlikely. If full immersion is unlikely, the highest float buoyancy load is specified that considers loading of the float immersed to create restoring moments which compensate for upsetting moments caused by side wind, asymmetrical rotorcraft loading, water wave action, and rotorcraft inertia.

b. Procedures.

(1) Tests should be conducted to establish procedures for water entry. These tests should include determination of optimum pitch attitude and forward velocity for landing in a calm sea as well as entry procedures for the highest sea state to be demonstrated (e.g., the recommended part of the wave on which to land and direction of landing relative to crest/trough direction).

(2) The landing structural design consideration should be based on water impact with a rotor lift of not more than two-thirds of the maximum design weight acting through the center of gravity under the following conditions:

(i) Vertical Landing Conditions.

(A) Zero forward velocity.

(B) The optimum pitch attitude as determined in paragraph AC 29.519b(1) with consideration for pitch attitude variations that would reasonably be expected to occur in service.

(C) Vertical descent velocity of 6.5 FPS or greater.

(D) Likely roll attitudes.

(ii) Forward Speed Landing Conditions.

(A) Forward velocities of zero to 30 knots (or a reduced maximum forward velocity if it can be demonstrated that a lower maximum velocity would not be exceeded in a normal one-engine-out landing).

(B) The optimum pitch attitude as determined in paragraph AC 29.519b(1) with consideration for pitch attitude variations that would reasonably be expected to occur in service.

(C) Vertical descent velocity of 6.5 FPS or greater.

(D) Likely roll and yaw attitudes.

(3) Landing load factors may be determined by--

(i) Landing gear drop tests for limited amphibian;

(ii) Water drop tests for amphibian; or

(iii) Analysis based on tests.

(4) Water load distribution should be determined by tests or analysis based on tests.

(5) Auxiliary float loads should be determined by full immersion or restoring moments required to react upsetting moments caused by side wind, asymmetrical rotorcraft loading, water wave action, and rotorcraft inertia. Auxiliary float loads may be determined by analysis. Load distributions should be determined by tests or analysis based on tests.

AC 29.521. § 29.521 (Amendment 29-3) FLOAT LANDING CONDITIONS.

a. Explanation. This is an optional requirement for float operations, and it applies only when float operations are requested. The regulation specifies vertical loads, aft loads, and side loads to be applied to the float installations. The two loading conditions to be applied are:

(1) Up-load Condition.

(i) A vertical load appropriate to a landing load factor determined under § 29.473(b).

(ii) The resultant water reaction passes vertically through the aircraft CG.

(iii) An aft load equal to 25 percent of the vertical load.

(2) Side-load Condition.

(i) A vertical load equal to 75 percent of the vertical load for the up-load condition.

(ii) Vertical load equally divided among the floats.

(iii) A side load at each float equal to 25 percent of the vertical load at each float.

b. Procedures.

(1) The vertical load factor is determined by drop tests in accordance with §§ 29.473(b) and 29.725. The floats may be drop tested, or they may be assumed to have the same load factor as wheeled gear which have been drop tested.

(2) Structural substantiation may be accomplished by either static tests or analysis using the specified loads. The load distribution on the floats may be realistically based on hydrostatic pressure distributions or conservative pressure distributions.

SUBPART C - STRENGTH REQUIREMENTS

MAIN COMPONENT REQUIREMENTS

AC 29.547. § 29.547 (Amendment 29-4) MAIN ROTOR STRUCTURE.

a. Explanation. This regulation requires the main rotor structure to be designed to the static load requirements of §§ 29.337 through 29.351 (vertical maneuvering loads, vertical and horizontal gust loads, and yawing maneuver loads). In addition, the main rotor blades, hubs, and flapping hinges are specified to be designed for impact forces of each blade against its stop during ground operation and for specified limit torque at any rotational speed including zero. The torque forces (from the drive system) are distributed to the rotor blades as specified.

b. Procedures.

(1) Substantiation in compliance with this standard is accomplished by application of the flight loads of §§ 29.337 through 29.351 and the torque loads of § 29.361 to the rotor structure by stress analyses and/or static tests. The use of wind tunnel data as well as flight loads survey data may be used to generate and/or check the external load magnitudes and distributions.

(2) Where new materials are used in the main rotor structure, such as composites containing plastics, the effects of temperature and humidity are to be considered in accordance with § 29.603, and the effects of uncertainties in manufacturing processes or inspection methods are to be considered in accordance with § 29.619.

(3) The design impact forces of each blade must be imposed against the blade stop or stops. Impact loads from 2 to 3 g's have been commonly used to provide rotor structure protection against blades impacting against lower (droop) stops. Different values may be used for flapping and lag stops as determined by a rational basis. Appropriate monitoring of the blades, hubs, flapping hinges, and stops during laboratory tests, ground endurance tests, and flight tests should ensure that the stops are sufficient for ground operation loads (taxiing, backing, etc.), training, and offshore platform landings. Taxiing should consider typical obstacles such as pavement edges, ropes, air lines, and so forth. The design torque loads are derived as prescribed.

AC 29.547A. § 29.547 (Amendment 29-40) MAIN ROTOR AND TAIL ROTOR STRUCTURE.

a. Explanation. Amendment 29-40 revised § 29.547 to add requirements to perform a design assessment. FAR 29.547 (a) and (b) set forth a definition of a rotor and its associated components and requires a design assessment to be performed. The intent of these paragraphs is to identify the critical components and/or clarify their

design integrity to show that the basic airworthiness requirements which are applicable to the rotors will be met.

A design assessment of the rotors should be carried out in order to substantiate that they are of a safe design and that compensating provisions are made available to prevent failures classified as hazardous and catastrophic in the sense specified in paragraph b below. In carrying out the design assessment, the results of the certification ground and flight testing (including any failures or degradation) should be taken into consideration. Previous service experience with similar designs should also be taken into account (see also FAR 29.601(a)).

b. Definitions. For the purposes of this assessment, failure conditions may be classified according to the severity of their effects as follows:

(1) Minor. Failure conditions which would not significantly reduce rotorcraft safety, and which involve crew actions that are well within the crew capabilities. Minor failure conditions may include, for example, a slight reduction in safety margins or functional capabilities, a slight increase in crew workload, such as routine flight plan changes, or some inconvenience to occupants.

(2) Major. Failure conditions which would reduce the capability of the rotorcraft or the ability of the crew to cope with adverse operating conditions to the extent that there would be, for example, a significant reduction in safety margins or functional capabilities, a significant increase in crew work load or in conditions impairing crew efficiency, or discomfort to occupants, possibly including injuries.

(3) Hazardous. Failure conditions which would reduce the capability of the rotorcraft or the ability of the crew to cope with adverse operating conditions to the extent that there would be --

(i) A large reduction in safety margins or functional capabilities.

(ii) Physical distress or higher workload such that the flight crew cannot be relied upon to perform their tasks accurately or completely.

(iii) Serious or fatal injury to a relatively small number of the occupants.

(iv) Loss of ability to continue safe flight to a suitable landing site.

(4) Catastrophic. Failure conditions which would prevent a safe landing.

(5) Minimize. Reduce to the least possible amount by means that can be shown to be both technically feasible and economically justifiable.

(6) Health Monitoring. Equipment, techniques and/or procedures by which selected incipient failure or degradation can be determined.

c. Procedures.

(1) Failure Analysis. The first stage of the design assessment should be the failure analysis, by which all the hazardous and catastrophic failure modes are identified. The failure analysis may consist of a structured, inductive bottom-up analysis, which is used to evaluate the effects of failures on the system and on the aircraft for each possible item or component failure. When properly formatted, it will aid in identifying latent failures and the possible causes of each failure mode. The failure analysis should take into consideration all reasonably conceivable failure modes in accordance with the following:

(i) Each item/component function(s).

(ii) Item/component failure modes and their causes.

(iii) The most critical operational phase/mode associated with the failure mode.

(iv) The effects of the failure mode on the item/component under analysis, the secondary effects on the rotors and on the rotor drive system, on other systems and on the rotorcraft. Combined effects of failures should be analyzed where a primary failure is likely to result in a secondary failure.

(v) The safety device or health monitoring means by which occurring or incipient failure modes are detected, or their effects mitigated. The analysis should consider the safety system failure.

(vi) The compensating provision(s) made available to circumvent or mitigate the effects of the failure mode (see also paragraph (2) below)

(vii) The failure condition severity classification according to the definitions given in (b) above.

When deemed necessary for particular system failures of interest, the above analysis may be supplemented by a structured, deductive top-down analysis, which is used to determine which failure modes contribute to the system failure of interest.

Dormant failure modes should be analyzed in conjunction with at least one other failure mode for the specific component or an interfacing component. This latter failure mode should be selected to represent a failure combination with potential worst case consequences.

When significant doubt exists as to the effects of a failure, these effects may be required to be verified by tests.

(2) Evaluation of Hazardous and Catastrophic Failures: The second stage of the design assessment is to summarize the hazardous and catastrophic failures and appropriately substantiate the compensating provisions which are made available to minimize the likelihood of their occurrence. Those failure conditions that are more severe should have a lower likelihood of occurrence associated with them than those that are less severe. The applicant should obtain early concurrence of the cognizant certificating authority with the compensating provisions for each hazardous or catastrophic failure.

Compensating provisions may be selected from one or more of those listed below, but not necessarily limited to this list.

(i) Design features; i.e., safety factors, part derating criteria, redundancies, etc.

(ii) A high level of integrity.

(iii) Fatigue tolerance evaluation.

(iv) Flight limitations.

(v) Emergency procedures.

(vi) An inspection or check that would detect the failure mode or evidence of conditions that could cause the failure mode.

(vii) A preventive maintenance action to minimize the likelihood of occurrence of the failure mode including replacement actions and verification of serviceability of items which may be subject to a dormant failure mode.

(viii) Special assembly procedures or functional tests for the avoidance of assembly errors which could be safety critical.

(ix) Safety devices or health monitoring means beyond those identified in (vi) and (vii) above.

AC 29.549. § 29.549 (Amendment 29-26) FUSELAGE AND ROTOR PYLON.

a. Explanation. This regulation requires that the fuselage and rotor pylon (including the tail fin, if any) be designed to withstand the flight loads of §§ 29.337 through 29.351, the ground loads of §§ 29.235, 29.471 through 29.497, skid loads of § 29.501, ski loads of § 29.505, water loads of § 29.521, and rotor loads of § 29.547(d) and (e). The ski and water loads pertain to optional features.

(1) Consideration is also required of --

(i) Auxiliary rotor thrust;

(ii) The torque reaction of each rotor drive system; and

(iii) Balancing air and inertia loads.

(2) Each engine mount and adjacent fuselage must be substantiated as prescribed. In addition, if 2 ½-minute power is used, "each engine mount and adjacent structure must be designed to withstand the loads resulting from a limit torque equal to 1.25 times the mean torque for 2 ½-minute power combined with 1g flight loads." Amendment 29-26 extended paragraph (e) of the standard to 2 ½-minute "OEI power."

b. Procedures. Compliance with this standard is accomplished by application of the specified aircraft loads including engine torque to the fuselage and rotor pylon structure by stress analyses and/or static tests. Drive system torque factors to be used are noted in § 29.547 for the main rotor structure as well as in § 29.549(e).

AC 29.551. § 29.551 AUXILIARY LIFTING SURFACES.

a. Explanation. This regulation specifies that auxiliary lifting surfaces be designed to withstand critical flight and ground loads derived for conditions specified and any "other critical condition expected in normal operation." Stub wings would comply with this standard.

b. Procedures. The surface design loads are derived from the conditions specified. Conservative aerodynamic data, including load distributions, may be used in place of data derived from wind tunnel or instrumented flight testing of the exact aerodynamic shapes involved. Special attention should be placed on concentrated load effects from fuel tanks or other large mass items that may be located in lifting surfaces. These types of load concentrations are to be considered in conjunction with inertia and aerodynamic loads.

SUBPART C - STRENGTH REQUIREMENTS

EMERGENCY LANDING CONDITIONS

AC 29.561 § 29.561 EMERGENCY LANDING CONDITIONS - GENERAL.

a. Explanation.

(1) Occupant protection. The occupants should be protected as prescribed from serious injury during an emergency/minor crash landing on water or land for the conditions prescribed in the standard. The standard states that each occupant should be given every reasonable chance of escaping serious injury in a minor crash landing. In addition, the occupants must be protected from items of mass inside the cabin as well as outside the cabin. For example, a cabin fire extinguisher must be restrained for the load factors prescribed in this section. A transmission or engine must be restrained to the load factors in § 29.561(b)(3) if located adjacent to, above, or behind the occupants.

(2) Load factor determination. Section 29.561(b)(3) specifies certain ultimate inertial load factors but allows a lesser downward vertical load factor by virtue of a 5 FPS ultimate rate of descent at maximum design weight.

(3) Retractable landing gear. For rotorcraft equipped with retractable landing gear only the retracted configuration must be considered.

(4) Fuel tank protection.

(i) Underfloor fuel tanks are specifically addressed in § 29.561(d). The fuselage structure must be designed to resist crash impact loads prescribed in § 29.561(b)(3) and to also protect the fuel tank from rupture as prescribed. The landing gear must be retracted if the rotorcraft is equipped with retractable gears.

(ii) Section 29.963(b), a general rule tank design standard, also refers to § 29.561. This standard specifies that each tank and its installation must be designed or protected to retain fuel without leakage under the emergency landing conditions in § 29.561. Paragraph AC 29.963 relates to this standard.

(5) Door and exit protection. The minor crash conditions contained in § 29.561(b)(3) should also be considered in designing doors and exits (§ 29.783(d) and (g), and § 29.809(e)).

(6) External load considerations. The load factors of § 29.561 and the criteria of § 29.562 are not directly applicable to external load systems. This is because in emergency crash scenarios that involve external loads, the external load is neither typically subjected to the same minor crash loads (§ 29.561) as is the rotorcraft hull and its internal occupants nor are all of the occupant protection criteria (§ 29.562) needed or

practicable to apply. Appropriate safety for external load carriage systems is provided by the criteria of § 29.865. Safety standards for external load attaching means are provided in § 29.865.

b. Procedures.

(1) The design criteria report or another similar report of the rotorcraft structural limits should contain the (ultimate) minor crash condition load factors.

(2) Section 29.785 (paragraph AC 29.875) concerns application of this design standard to seats (berths, litters), belts, and harnesses.

(3) The ultimate design landing and maneuvering load factors may exceed the minor crash condition load factors. The highest load factor derived must be used.

(i) For example, for light weight conditions, the ultimate maneuvering load factor may be 5.25g as specified in § 29.337.

(ii) The ultimate vertical landing load factors derived from §§ 29.471 through 29.521, whichever are appropriate for the design, may exceed the 4.0g down load factor in this section. The rotorcraft landing case design limit contact velocity must be at least 6.5 FPS (see §§ 29.473 and 29.725).

(4) As specified in § 29.561(b)(3)(iv), the downward load factor is 4.0, or a lower design load factor may be used at maximum design weight.

(i) The lower load factor relates to a rotorcraft impacting a flat, hard landing surface at 5 FPS (ultimate) vertical rate of descent. The load factor derived for each unique design is a function of the rotorcraft impact/crushing characteristics.

(ii) The 4.0g down load factor case is related to either a fixed or retractable gear rotorcraft. This condition is not dependent on impact characteristics of the rotorcraft.

(iii) As noted in paragraph b(3) above, the design landing load factors may exceed each of the two previous cases and would then become the prominent design (vertical load) parameter for seats, transmissions, fire extinguishers, and so forth.

(5) Items of mass such as fire extinguishers, radio equipment, life rafts, engines, and/or transmissions must be restrained for the appropriate load factors.

(6) Cargo/baggage compartments separated from the passenger compartment must be designed for load factors specified in § 29.787. The conditions in § 29.561 are excepted from that standard.

(7) Each fuel tank and its installation are subject to the loads stated in this standard whether “under floor” or located elsewhere. (See § 29.963(b) also.) Under-floor fuel tanks are specifically addressed in § 29.561(d); however, an acceptable means of compliance with CAR 7.261 which is identical to and preceded § 29.561(d) is quoted here for information.

> NOTE: Fuselage keels whose design and structural strength are such as to resist crash impacts associated with the emergency landing conditions of § 7.260 (§ 29.561) without extreme distortion which might tend to rupture the fuel tank may be considered to comply with the requirements of this section (7.261).
>
> Puncture resistant “bladder” fuel cells that are adequately designed and also protected from the stated impact loads imposed on the fuselage may also satisfy the standards.

(8) For rotorcraft with retractable landing gear, alternative landing gear positions and the resulting effects on potential fuel release should be evaluated.

AC 29.561A. <u>§ 29.561 (Amendment 29-29) EMERGENCY LANDING CONDITIONS -GENERAL</u>.

a. <u>Explanation</u>. Amendment 29-29 adds or increases the design static load factors of § 29.561 in three different areas. The addition of these load factors eliminates the 5 FPS descent velocity criteria of unamended § 29.561(b)(3).

(1) The design static load factors for the cabin in § 29.561(b)(3) are increased in concert with the dynamic test requirements of new § 29.562.

(2) Design static load factors are added in § 29.561(c) for external items of mass located above and/or behind the crew and passenger compartment.

(3) The static load factors, which were formerly only referenced in § 29.561(d), are now included explicitly in § 29.561(d) for substantiation of internal fuel tanks which are below the passenger floor.

b. <u>Procedures</u>. The procedures of paragraph AC 29.561 continue to apply except the new load factors of § 29.561 should be used. Penetration of any items of mass into the cabin or occupied areas should be prevented. In addition, each fuel tank and its installation are subject to specific load factors that are based on the fuel tank location.

(1) The crash impact load factors for the airframe structure surrounding the underfloor fuel tanks are specified in § 29.561(d). The fuselage structure must be designed to resist the specified crash impact loads and to help protect the fuel tank from rupture. If equipped with retractable landing gear, the effects of the landing gear

on fuel system rupture should be considered in both the retracted and unretracted configurations.

(2) Section 29.952(b) (see AC 29.952) specifies the design load factors for crash resistant fuel systems in an otherwise survivable impact. This section relates to § 29.561(d) as follows. The § 29.952 load factors are for the fuel tanks, other significant mass items in the fuel system, and their attachment to the rotorcraft airframe for both occupant survivability and retention of fuel in a survivable impact; whereas, the § 29.561(d) load factors only apply to the rotorcraft airframe surrounding the underfloor fuel tanks and their installation for the same reasons. These two sets of load factors are not additive. They are applied separately (as design ultimate load factors) to the portions of the rotorcraft to which they are specified to apply. The application of the § 29.561(d) load factors is described as follows. The loads generated by § 29.561(d) are intended to be applied to the airframe structure surrounding the fuel cell to ensure that the entire airframe structure provides the appropriate level of crash resistance (i.e., stiffness, crushability, crushing rate, energy absorption capability, etc.) and to ensure that the airframe structure's failure modes (e.g., buckling, creation of sharp edges, structural spears, etc.) are such that fuel cell rupture (and the resultant post crash fire potential) is mitigated to the maximum practicable extent in a otherwise survivable emergency landing. Each fuel cell (and major fuel cell component) creates an applied load on the airframe in an emergency landing condition. These loads are determined by multiplying the worst case mass of the fuel cell (i.e., a full fuel cell) by the load factors of § 29.561(d). These loads are then applied (utilizing the appropriate design load paths) to the airframe structure surrounding the fuel cell to help design the structure for optimal crash resistance. Added stiffness effects for both a full and less than full fuel cell should be considered in the design process. A significantly less than full fuel cell will typically not have any significant stiffness effects, since in a less than full condition the fuel cell cannot typically transfer load hydraulically.

AC 29.561B. <u>§ 29.561 (Amendment 29-38) EMERGENCY LANDING CONDITIONS-GENERAL</u>.

a. <u>Explanation.</u> Amendment 29-38 adds a new rearward emergency load factor of 1.5g to both §§ 29.561(b)(3)(v) and 29.561(c)(5). The addition of the 1.5g rearward load factor in § 29.561(b)(3)(v) is to provide an aft ultimate load condition for substantiation of the restraints required for retention of both occupants and significant items of mass inside the cabin that could otherwise come loose and cause injuries in an emergency landing. The addition of the 1.5g rearward load factor to § 29.561(c)(5) is to provide an aft ultimate load condition for substantiation of the support structure for retention of significant items of mass above and forward of the occupied volume(s) of the rotorcraft that could otherwise come loose and injure an occupant in an emergency landing. Amendment 29-38 also increases the forward, sideward, and downward emergency load factors of § 29.561(c)(2), (c)(3), and (c)(4), respectively, for retention of items of mass above and behind the occupied volume(s) that could otherwise come loose and injure an occupant in an emergency landing.

b. Procedures. The procedures of paragraphs AC 29.561 and AC 29.561A continue to apply except the newly specified load factors must be used. A list of the significant items of mass to be considered should be compiled by the applicant and approved by the certifying authority.

AC 29.562. § 29.562 EMERGENCY LANDING DYNAMIC CONDITIONS.

a. Explanation. Amendment 29-29 adds new requirements for the dynamic testing of all seats in rotorcraft.

b. Procedures. AC 20-137, "Dynamic Evaluation of Seat Restraint Systems and Occupant Restraint for Rotorcraft (Normal and Transport)," provides procedures for complying with § 29. 562 using the 170-pound anthropomorphic test dummy specified in § 29.562(b). Those seats not occupied for takeoff and landing, and so placarded and identified in the rotorcraft flight manual (RFM), may be excluded from compliance.

AC 29.563. § 29.563 (Amendment 29-12) STRUCTURAL DITCHING PROVISIONS.

a. Explanation. Amendment 29-12 included certification requirements for ditching approvals. The rotorcraft must be able to sustain an emergency landing in water as prescribed by § 29.801(e).

b. Procedures. Refer to paragraph AC 29.801, § 29.801, for procedures.

AC 29.563A. § 29.563 (Amendment 29-30) STRUCTURAL DITCHING PROVISIONS.

a. Explanation. Amendment 29-30 added specific structural conditions to be considered to support the overall ditching requirements of § 29.801. These conditions are to be applied to rotorcraft for which over-water operations and associated ditching approvals are requested.

(1) The forward speed landing conditions are specified as:

(i) The rotorcraft should contact the most critical wave for reasonable, probable water conditions in the likely pitch, roll, and yaw attitudes.

(ii) The forward velocity relative to wave surface should be in a range of 0 to 30 knots with a vertical descent rate of not less than 5 FPS relative to the mean water surface.

NOTE: A forward velocity of less than 30 knots may be used for multiengine rotorcraft if it can be demonstrated that the forward velocity selected would not be exceeded in a normal one-engine-out touchdown.

(iii) Rotor lift of not more than two-thirds of the design maximum weight may be used to act through the CG throughout the landing impact.

(2) For floats fixed or deployed before water contact, the auxiliary or emergency float conditions are specified in § 29.563(b)(i). Loads for a fully immersed float should be applied (unless it is shown that full immersion is unlikely). If full immersion is unlikely, loads resulting from restoring moments are specified for sidewind and unsymmetrical rotorcraft landing.

(3) Floats deployed after water contact are normally considered fully immersed during and after full inflation. An exception would be when the inflation interval is long enough that full immersion of the inflated floats does not occur; e.g., deceleration of the rotorcraft during water impact and natural buoyancy of the hull prevent full immersion loads on the fully inflated floats.

b. Procedures.

(1) The rotorcraft support structure, structure-float attachments, and floats should be substantiated for rational limit and ultimate ditching loads.

(2) The most severe wave heights for which approval is desired are to be considered. A minimum of Sea State 4 condition wave heights should be considered (reference paragraph AC 29.801 (§ 29.801) for a description of Sea State 4 conditions).

(3) The landing structural design consideration should be based on water impact with a rotor lift of not more than two-thirds of the maximum design weight acting through the center of gravity under the following conditions:

(i) Forward velocities of 0 to 30 knots (or a reduced maximum forward velocity if it can be demonstrated that a lower maximum velocity would not be exceeded in a normal one-engine-out landing).

(ii) The rotorcraft pitch attitude that would reasonably be expected to occur in service. Autorotation flight tests or one-engine-inoperative flight tests, as applicable, should be used to confirm the attitude selected. This information should be included in the Type Inspection Report.

(iii) Likely roll and yaw attitudes.

(iv) Vertical descent velocity of 5 FPS or greater.

(4) Landing load factors and water load distribution may be determined by water drop tests or analysis based on tests.

(5) Auxiliary or emergency float loads should be determined by full immersion or the use of restoring moments required to react upsetting moments caused by

sidewind, asymmetrical rotorcraft landing, water wave action, rotorcraft inertia, and probable structure damage and punctures considered under § 29.801. Auxiliary or emergency float loads may be determined by tests or analysis based on tests.

(6) Floats deployed after initial water contact are required to be substantiated by tests or analysis for the specified immersion loads (same as for (5) above and for the specified combined vertical and drag loads).

SUBPART C - STRENGTH REQUIREMENTS

FATIGUE EVALUATION

AC 29.571. § 29.571 FATIGUE EVALUATION OF FLIGHT STRUCTURE.

a. Explanation. An evaluation is required to assure structural reliability of the rotorcraft in flight. Advisory Circular 20-95 contains background information and acceptable means of compliance with the requirements. A safe life may be assigned or the structure may be fail safe as prescribed.

b. Procedures.

(1) The fatigue evaluation requires consideration of the following factors:

(i) Identification of the structure/components to be considered.

(ii) The stress during operating conditions.

(iii) The operating spectrum or frequency of occurrence.

(iv) Fatigue strength, and/or fatigue crack propagation characteristics, residual strength of the cracked structure.

(2) Since the design limits, e.g., rotor RPM (maximum and minimum), airspeed, and blade angles (thrust, weight, etc.) affect the fatigue life of the rotor system, it is necessary that flight conditions be conducted at limits that are appropriate for the particular rotorcraft and at the correct combination of these limits. It will be the responsibility of flight test personnel to determine that the flight strain program includes conditions of flight at the various combinations of rotor RPM, airspeed, thrust, etc., that will be representative of the limits used in service. The flight test personnel should assure that the severity of the maneuvers to be investigated is such that actual service use will not be more severe. Flight test verification may be achieved through:

(i) Flying a representative set of maneuvers with the applicant's pilot in the test aircraft at noncritical combinations of weight, CG, and speed. (An FAA/AUTHORITY letter for specific test authorization would ordinarily be required.)

(ii) Flying a representative set of maneuvers with the applicant's pilot in a similar (certified) model to assess and agree upon the required maneuvers, control deflections, and aircraft rates. The required maneuvers or conditions will be specified in the flight strain program plan.

(iii) Flying a chase aircraft which has a flight envelope appropriate to allow visual confirmation of the proposed and programmed flight maneuvers.

(iv) Observation of telemetered flight data to assure desired control deflections, rates, and aircraft attitudes.

(v) Some combinations of items b(2)(i) through b(2)(iv) above.

(3) Assessing the operation spectrum and the flight loads or strain measurement program will involve airframe, propulsion, and flight test personnel.

(4) Variation in the operating or loading spectrum among models, and variations in the spectrum for a particular model rotorcraft, should be evaluated. AC 20-95, paragraph 7, entitled “Loading Spectrum,” contains the statement that Table 1 (of the circular) contains typical percent of occurrences for various flight conditions for a single-piston-engine powered rotorcraft used in utility operations. In addition, the table should be used only as a guide and should be modified as necessary for each particular rotorcraft design.

(5) The difference in loading spectrum for different models that may be anticipated is illustrated by comparing the percentage of time assigned to level flight conditions, specifically 0.8 V_H to 1.0 V_H for three different rotorcraft designs where V_H is the maximum airspeed at maximum continuous power in level flight. The first was obtained from Table 1, AC 20-95 which applies to a single-piston-engine powered small rotorcraft used in utility operations. The second was obtained from data for a single-turbine-engine powered seven-place small business and utility rotorcraft. The third was obtained from data for a twin-engine-powered 13 passenger transport rotorcraft. It should be noted that the level flight percentage of occurrences shown in the table below for the turbine utility business and twin turbine transport rotorcraft are only examples of a particular design. The high percentage of time shown in this flight regime could be unconservative for some designs, especially if the stresses under these design conditions produce an infinite fatigue life for the particular component. The fatigue spectrum percentage of occurrences in AC 20-95 may be modified according to the intended operational usage of the rotorcraft. However, a conservative application should be considered.

FIGURE AC 29.571-1

Comparison Percent of Time in Level Flight

Piston Utility		Turbine Utility Business		Twin Turbine Transport	
0.8 V_{NE}	25%	0.8 V_H	16%	0.8 V_H	15%
1.0 V_H	15%	0.9 V_H	21%	0.9 V_H	20%
1.0 V_{NE}	3%	1.0 V_H	24%	1.0 V_H	38%
Total	43%		61%		73%

This variation illustrates the “tailoring” of the loading spectrum for the type of rotorcraft and the anticipated usage.

(6) External cargo operations are a unique and demanding operation. A “logging” operator may use 50 maximum power applications per flight hour to move logs from a cutting site to a hauling site. Power is used to accelerate, decelerate, or hover prior to load release. Lifting loads over an obstruction or natural barrier is another example of very frequent high power applications for takeoff and for hovering over the release area. Similar types of operations require flight loads data to assess the effects on fatigue critical components.

(7) Frequently the applicant may request approval of a gross weight for an external cargo configuration that exceeds the standard configuration gross weight. The external cargo V_{NE} is typically significantly lower than the standard configuration V_{NE} possibly due to adverse effects on flight loads at the increased weight.

(8) The impact of the external cargo operation on standard configuration limits should be assessed to determine whether or not the component service lives will be affected. The assessment may be done by calculating an “external cargo configuration” service life for each critical component. The lowest service life obtained from standard configuration flight loads data and loading spectrum, or from external cargo configuration flight loads data and loading spectrum is generally the approved service life. This procedure avoids prorating the operating time between the two types of operations. This procedure is necessary since the regulatory maintenance and operating rules do not require recording time in service for the different types of operations.

(9) The applicant should plan to conduct a flight loads survey program for both a standard configuration and an external cargo configuration, if appropriate. This procedure will avoid delays associated with reinstallation and calibration of equipment.

AC 29.571A. <u>§29.571 (Amendment 29-28) FATIGUE EVALUATION OF STRUCTURE</u>.

a. <u>Explanation</u>. Amendment 29-28 adds a requirement to substantiate tolerance to flaws during the fatigue evaluation of structure. A flaw tolerant safe-life evaluation or a fail-safe (residual strength after flaw growth) evaluation is required by § 29.571(b) unless “the applicant establishes that these fatigue flaw tolerant methods for a particular structure cannot be achieved within the limitations of geometry, inspectability, and good design practices.”

b. <u>Procedures</u>.

(1) AC 29 MG 11 provides acceptable general procedures for complying with Amendment 29-28.

(2) Specific rotorcraft drive system gear fatigue evaluation procedures, which supplement Appendix 1, follow:

(i) Fatigue test evidence is necessary for the fatigue evaluation of gears. The test evidence should be provided by rotating tests of complete gearbox specimens operating under power. The tests provide the basis for analysis leading to the establishment of safe-life.

(ii) The tests are conducted specifically for the purpose of gear tooth evaluation, and components subjected to the tests do not have to be considered serviceable on completion of the test. Excessive wear on bearings and shafts and marking (including spalling) of bearings and gear teeth are acceptable provided no fatigue damage is evident on the gear teeth. However, fatigue damage other than tooth fatigue should be considered for test validity and the integrity of the affected part confirmed as necessary.

(iii) The test conditions (torque versus number of cycles) should permit the setting of mean strength curve(s) to be associated with each primary gear in the drive train. The minimum test condition should encompass those power levels for which repeated application in service is expected under normal conditions. The S-n curve(s), for the material and type of gear, should be reduced by a factor of safety to take into account material and manufacturing variability. The factored curve will then be used in conjunction with the flight power spectrum to determine a life (limited or unlimited) for the gears in the primary drive system.

(iv) Special procedures, which do not affect fatigue evaluation of the gear teeth, may be allowed to facilitate completion of the test provided they have been justified and they do not affect life determination. These include periodic interruption for inspection, replacement of non-critical parts and the use of special lubricants, special cooling systems, and methods to prevent unrepresentative deflections at the test torque levels.

(v) From evidence in relation to the strength of steel gears of conventional design, it is accepted that adequate fatigue strength can be demonstrated by the use of the above safety factor of 1.4 for a single test, 1.35 for two tests, 1.32 for three tests, and 1.3 for four or more tests. Where several tests are to be conducted, specimens should be selected from different manufacturing batches if practicable.

(vi) Demonstration of infinite life for gear teeth will normally require tests of a minimum of 10^7 cycles duration at factored power levels. Use of shorter duration tests should be justified.

CHAPTER 2. PART 29
AIRWORTHINESS STANDARDS
TRANSPORT CATEGORY ROTORCRAFT

SUBPART D - DESIGN AND CONSTRUCTION

DESIGN AND CONSTRUCTION - GENERAL

AC 29.601. § 29.601 DESIGN.

a. Explanation.

(1) This rule requires that no design features or details be used that experience has shown to be hazardous or unreliable.

(2) Further, the rule requires that the suitability of each questionable design detail and part must be established by tests.

b. Procedures.

(1) This rule is met partially by a review of service history of earlier model rotorcraft, or for a new model, review of service experience of models with similar design features. Specifically, this rule covers “features or details” such as the following:

(i) Seat track-to-seat interface fittings should have adequate locking devices to prevent both premature structural failure and premature unlatching.

(ii) Seat belt and harness should be of a type and construction that service experience has shown to be easy to don, unlatch, and remove. They should also be of a type that is reliable, does not interfere with egress, and does not sustain unnecessary wear and tear under normal operations.

(iii) Metallic parts less than a certain thickness gauge and composite materials less than a certain number of plies should not be used. The minimum thickness and number of plies should be based to a large degree on service experience (normal wear and tear) with similar designs.

(2) The effects of service wear on the loading of critical components should be considered. Flight testing, ground testing, and analyses may be used in these considerations.

(3) Tests are required for details and parts which the applicant chooses to use after questions have arisen concerning their suitability.

AC 29.602 § 29.602 CRITICAL PARTS.

a. Explanation. The objective of identifying critical parts is to ensure that critical parts are controlled during design, manufacture, and throughout their service life so that the risk of failure in service is minimized by ensuring that the critical parts maintain the critical characteristics on which certification is based. Many rotorcraft manufacturers already have procedures in place within their companies for handling “critical parts”. These may be required by their dealings with other customers, frequently military (e.g., US DoD, UK MoD, Italian MoD). Although these programs may have slightly different definitions of “critical parts” and have sometimes been called “Flight Safety Parts”, “Critical Parts”, “Vital Parts”, or “Identifiable Parts”, they have in the past been accepted as meeting the intent of this requirement and providing the expected level of safety.

b. Procedures. The rotorcraft manufacturer should establish a Critical Parts Plan. The policies and procedures which constitute that plan should be such as to ensure that-

(1) All critical parts of the rotorcraft are identified by means of a failure assessment and a Critical Parts List is established. The use of the word “could” in paragraph 29.602(a) of the rule means that this failure assessment should consider the effect of flight regime (i.e., forward flight, hover, etc.). The operational environment need not be considered. With respect to this rule, the term “catastrophic” means the inability to conduct an autorotation to a safe landing, without exceptional piloting skills, assuming a suitable landing surface.

(2) Documentation draws the attention of the personnel involved in the design, manufacture, maintenance, inspection, and overhaul of a critical part to the special nature of the part and details the relevant special instructions. For example all drawings, work sheets, inspection documents, etc., could be prominently annotated with the words "Critical Part" or equivalent and the Instructions for Continued Airworthiness and Overhaul Manuals (if applicable) should clearly identify critical parts and include the needed maintenance and overhaul instructions. The documentation should:

(i) Contain comprehensive instructions for the maintenance, inspection and overhaul of critical parts and emphasize the importance of these special procedures;

(ii) Indicate to operators and overhaulers that unauthorized repairs or modifications to critical parts may have hazardous consequences;

(iii) Emphasize the need for careful handling and protection against damage or corrosion during maintenance, overhaul, storage, and transportation and accurate recording and control of service life (if applicable).

(iv) Require notification of the manufacturer of any unusual wear or deterioration of critical parts and the return of affected parts for investigation when appropriate;

(3) To the extent needed for control of critical characteristics, procedures and processes for manufacturing critical parts (including test articles) are defined (for example material source, forging procedures, machining operations and sequence, inspection techniques, and acceptance and rejection criteria). Procedures for changing these manufacturing procedures should also be established.

(4) Any changes to the manufacturing procedures, to the design of a critical part, to the approved operating environment, or to the design loading spectrum are evaluated to establish the effects, if any, on the fatigue evaluation of the part.

(5) Materials review procedures for critical parts (i.e. procedures for determining the disposition of parts having manufacturing errors or material flaws) are in accordance with paragraphs (3) and (4) above.

(6) Critical parts are identified as required, and relevant records relating to the identification are maintained such that it is possible to establish the manufacturing history of the individual parts or batches of parts.

(7) The critical characteristics of critical parts produced in whole or in part by suppliers are maintained.

AC 29.603. § 29.603 (Amendment 29-17) MATERIALS.

a. Explanation. The rule requires that the suitability and durability of materials, the failure of which could adversely affect safety, must be determined by three-fold considerations:

(1) Considerations based on experience or tests.

(2) Meeting approved specifications.

(3) Taking into account environmental conditions such as temperature and humidity.

b. Procedures.

(1) Experience may be used to show a material's resistance to wear and deterioration from environmental effects (environmental effects include both natural environmental effects such as exposure to sunlight, water, salt spray, etc., and installation environmental effects such as exposure to fuel, hydraulic fluids, deicing fluids, etc.). Installation environmental effects should consider both direct exposure contact and expected migration of potentially deleterious fluids and compounds.

Testing for environmental effects may use either coupon testing, full-scale testing, or a combination. A combination of testing and experience may also be used.

(i) MIL-HDBK's-5, -17, and -23 include consideration of some environmental effects and contain reference to additional methods of testing for environmental effects.

(ii) The use of AC 20-107A, Composite Aircraft Structure, is recommended for environmental and damage tolerance considerations of advanced composite materials. (Also see paragraph AC 29 MG 8.)

(iii) The effects of excessive wear and delamination of elastomeric and self-lubricated bearings used in critical load carrying applications in relation to redistribution of loading should be considered.

(2) Where possible, materials that meet widely accepted specifications such as AISI, SAE, MIL, or AMS and alloys which have favorable experience or tests should be used. Where company-developed materials are used, approved specifications are required to ensure the developed properties are duplicated in each lot of material. Raw material quality control is defined in FAA Order N8020-11 which is scheduled to be integrated into a forthcoming advisory circular. Documented specification usage is necessary to maintain quality assurance of materials.

(3) Section 29.613 concerns strength properties and design values. (See paragraph AC 29.613.)

AC 29.605. § 29.605 (Amendment 29-17) FABRICATION METHODS.

a. Explanation. The basic requirement of this rule is that the methods of fabrication must produce sound structure and produce it consistently.

(1) A process specification is required for fabrication processes requiring close control.

(2) A test program is explicitly required for each new aircraft fabrication method.

b. Procedures.

(1) The approved specifications required by this rule may either be established government/industry specifications such as MIL, AISI, ASTM, or SAE, or the specifications may be company-developed proprietary specifications. Sufficient data should be provided to the FAA/AUTHORITY aircraft engineering offices to show that the desired features are provided by the process specification. In addition, sufficient process controls, inspections, and tests should be coordinated with FAA/AUTHORITY

manufacturing inspection personnel to ensure that continued quality of the process is provided.

(2) In addition to the examples given by the rule; i.e., gluing, spot welding, and heat treating process, specifications should also be prepared for types of welding other than spot welding, for platings of metals, for protective finishes (other than decorative), for sealing, and for unique fabrication methods such as those used for composite materials.

(3) The required test programs should consider static strength effects, fatigue strength effects, and environmental effects as appropriate to the processes.

(4) During the fabrication of advanced composite materials, the effects of fabrication anomalies (i.e., disbonds, voids, porosity) should be considered. Special nondestruct testing inspection techniques and procedures should be developed to cover fabrication with allowable anomalies and permitted repair procedures. (See also paragraph AC 29 MG 8.)

AC 29.607. § 29.607 (Amendment 29-5) FASTENERS.

a. Explanation. Section 29.607 of Amendment 29-5 requires dual locking removable fasteners in critical locations. A nonfriction locking device is specifically required in any bolt subject to rotation, as stated in the rules.

b. Procedures. Advisory Circular 20-71, Dual Locking Devices or Fasteners, December 8, 1970, contains information, procedures, and means of complying with § 29.607 of Amendment 29-5.

AC 29.609. § 29.609 PROTECTION OF STRUCTURE.

a. Explanation. The structure should be suitably protected as specified in the rule to maintain its design strength. Ventilation and drainage provisions must be provided as specified in the rule. Overboard drains should be furnished for corrosive or waste liquids. Drains for flammable fluids are specified in other rules such as §§ 29.999 and 29.1187.

b. Procedures.

(1) The structure may be preserved, painted, or treated with chemical films to protect it from strength deterioration. An approved process specification should be used for these types of treatments.

(2) Parts may be plated or chemically treated, such as anodized, for protection. An evaluation and substantiation may be required to assure the structure or parts are

not adversely affected during, or as a result of, the plating or treatment process. (§ 29.605 concerns approval of process specifications and fabrication methods.)

(3) Plating or material surface hardness or composition changes may require fatigue substantiation to assure the fatigue strength is not altered or is otherwise properly assessed. An approved process specification should be used for these types of treatments.

(4) To prevent water accumulation, drain holes should be placed at possible dams such as bulkheads, and at low points in the fuselage and in the stabilizing surfaces.

(5) Control tubes and tubes used as primary mount structures (i.e., transmission support structure and engine mount structure) should be designed to prevent entry and collection of corrosive fluids or vapor, including water.

(i) A closed insert in each tube end may be used.

(ii) A sealant applied around the tube ends and around each rivet head may be used.

(6) Overboard drains should discharge clear of the entire rotorcraft. Dyed water discharged in flight, may be used to assure fluids are properly drained.

(7) Welded tubes should be flushed and sealed after welding in accordance with an approved process specification.

(8) Refer to AC 43-4, “Corrosion Control for Aircraft,“ for further procedures.

AC 29.610. § 29.610 (Amendment 29-40) LIGHTNING AND STATIC ELECTRICITY PROTECTION.

a. Background. During the initial development and promulgation of the standards concerning the airworthiness of rotorcraft, it was not necessary to specify design features that would protect the rotorcraft from the meteorological phenomenon of lightning. This was due, in part, to the fact that rotorcraft were primarily operated in a VFR and nonicing environment. Also, a prudent pilot avoided thunderstorms where the possibility of encountering severe weather and a lightning strike was much greater. The construction, design, and operating environment of civil rotorcraft have changed markedly within the past two decades. Many rotorcraft are now authorized to fly IFR in all types of weather environment. One transport design has been approved for flight into known icing conditions. Additionally, many rotorcraft now use the same advanced technologies in structures and systems as do airplanes. Because of these facts, a specific rule on lightning protection of rotorcraft was adopted in Amendment 29-24. For further information, see the preamble of Amendment 29-24 (49 FR 44437; 11/6/84),

Proposal 2-14. Section 29.610 is similar to § 25.581 which applies to the protection of structures of transport airplanes. However, the standard provides for specific protection of the aircraft structures as well as the systems of the rotorcraft. In addition, the protection of fuel systems from the effects of lightning is found and referenced in Report DOT/FAA/CT-83/3, the applicable version of Users Manual for AC 20-53, Protection of Airplane Fuel Systems Against Fuel Vapor Ignition Due to Lightning.

b. Explanation.

(1) The regulation requires that the rotorcraft must be protected against the catastrophic effects of lightning. This means that a lightning strike encounter should not prevent the continued safe flight and landing of the rotorcraft.

(2) Paragraph AC 29.1309 addresses the protection required for systems. Protection of the rotorcraft structures may be accomplished in a similar fashion.

(3) The structural components of the rotorcraft should be designed in such a manner that the lightning current may be safely diverted or conducted through the rotorcraft without damaging any critical structure or without causing damage to noncritical structure, the failure of which would preclude the continued safe flight and landing of the rotorcraft. A radome or fin cap which explodes due to a lightning strike and results in catastrophic damage to main or tail rotors is a scenario of lightning damage to a noncritical structure which has catastrophic results.

(4) This type of strike effect on the rotorcraft is generally referred to as direct effects. Direct effects are damage which includes the burning, eroding, blasting, or structural deformation produced by the high currents of the lightning flash passing through the rotorcraft structure.

c. Procedures.

(1) Certification Plan. Although not a regulatory requirement, it is recommended that a formal written certification plan be used to ensure regulatory compliance. The use of this plan is beneficial to both the applicant and the FAA/AUTHORITY because it identifies and defines an acceptable resolution to the critical issues early in the certification process. These are the usual steps to be followed when utilizing a certification plan:

(i) Prepare a certification plan which describes the analytical procedures and/or the qualification tests to be utilized to demonstrate protection effectiveness. Test proposals should describe the rotorcraft and system to be utilized, test drawing(s) as required, the method of installation that simulates the production installation, the lightning zone(s) applicable, the lightning simulation method(s), test voltage or current waveforms to be used, diagnostic methods, and the appropriate schedules and location(s) of proposed test(s).

NOTE: The recommended reference for quantification of the lightning environment, the determination of the aircraft lightning strike zones, and the determination of appropriate test methods is SAE AE4L Committee Report, dated June 20, 1978, Lightning Test Waveforms and Techniques for Aerospace Vehicles and Hardware. Additionally, information may also be found in the NASA publication No. RP-1008, Lightning Protection of Aircraft.

(ii) Obtain FAA/AUTHORITY concurrence that the certification plan is adequate.

(iii) Obtain FAA/AUTHORITY detail part conformity of the test articles and installation conformity of applicable portions of the test setup. Obtain FAA/AUTHORITY approval of the test proposal. A comprehensive test proposal may be used.

(iv) Schedule FAA/AUTHORITY witnessing of the test or tests proposed.

(v) Submit a test report describing all results and obtain FAA/AUTHORITY approval of each report prepared.

(2) Test Conditions. Refer to SAE AE4L Committee Report, dated June 20, 1978, and the NASA publication noted in paragraph c(1)(i) to determine the appropriate test parameters.

(3) Aircraft Design Features and Criteria. MIL-B-5087B, Amendment 2, or later amendment contains valuable information to assist the designer. Figure 6 in the specification contains fault current versus bond resistance information. Refer to the NASA publication noted above also.

(i) Aluminum wire screen or mesh applied to the control or stabilizing surface and electrically bonded at each joint or juncture has been successful in conducting the current without serious damage.

(ii) Metal skin surfaces combined with surface wire screen or mesh have been successful. Also, successful use of surface treatment has been reported. For composites, treatments such as the following have been used: flame spray coatings, aluminized glass, metal foil, metallized fabrics, and conductive paint.

(iii) Ball or roller bearings may be used to conduct the current at rotating joints. However, increased friction or possible seizure of the bearing may occur. The potential for this should be evaluated. Inspection and replacement criteria for possible damage should be addressed in the manual for continued airworthiness. Bearings are especially susceptible to pitting and internal arcing.

(iv) Report DOT/FAA/CT-86/8, April 1987, Determination of Electrical Properties of Grounding, Bonding, and Fastening Techniques for Composite Materials, may assist the applicant.

(4) Fuel Systems. Refer to Report DOT/FAA/CT-83/3 referenced in paragraph AC 29.610a. For additional information on the lightning protection requirements for fuel systems for rotorcraft with a certification basis which includes Amendment 29-26 refer to paragraph AC 29.954.

d. Aircraft Design Criteria for Lightning and Static Electricity Protection.

(1) Lightning Protection.

(i) General. The rotorcraft structure should be provided with means to conduct lightning so that the rotorcraft and its occupants will not be endangered.

(ii) Rotors and Control Systems.

(A) It should be established that an adequate primary bonding path exists between the rotors and the airframe, such that a lightning strike on a rotor will not result in damage to or seizure of gearbox or swashplate bearings, control jacks, etc.

(B) Each hinge and bearing of rotor blades and control surfaces should either-

(1) Be of a type that is capable of withstanding a lightning discharge without damage or seizure leading to loss of function, or

(2) Be provided with at least one primary bonding conductor.

Where bonding conductors are provided, they should be as flexible and short as possible and should be installed so that there is no danger of the conductor jamming the hinge or bearing, particularly if partially disrupted by a lightning strike.

(iii) External Non-metallic Parts.

(A) Where non-metallic parts are fitted externally to the rotorcraft (e.g., rotors, radomes, composite skin panels) and are subjected to lightning, they should be protected against the following risks:

(1) The disruption of the materials because of rapid expansion of gases within them (e.g., water vapor);

(2) The rapid build-up of pressure in voids or in the enclosure provided by the parts resulting in mechanical disruption of the parts themselves or of the structure enclosed by them;

(3) Fire caused by the ignition of the materials themselves or of the materials contained within the enclosures.

(B) Materials used for external non-metallic parts should have low water-absorption characteristics, should not occlude gases, and should be of high dielectric strength in order to encourage surface flashover rather than puncture.

(C) Rotors and other external parts of nonmetallic construction should be provided with effective lightning diverters and/or primary conductors, which are capable of safely carrying lightning discharges, unless it can be shown that damage due to lightning discharge will not endanger the rotorcraft or its occupants. Bonding straps/leads are not required for small gaps between metallic structure and diverters in non-conducting panels in order to comply with the lightning protection criteria. However, an electrical bonding path may be required to achieve static electricity protection.

(D) In some cases (e.g. radomes and rotors), confirmatory tests may be required to check the adequacy of the lightning protection provided.

(2) Characteristics of Lightning Discharges. The data contained in FAA AC 20-53 should be used for the purpose of assessing the adequacy of lightning discharge protection of rotorcraft.

(3) Protection Against the Accumulation of Static Charges.

(i) General. All items, which by the accumulation and discharge of static charges may cause a danger of electrical shock, ignition of flammable vapors or interference with essential equipment (e.g. radio communications and navigational aids) should be adequately bonded to the main aircraft grounding system.

(ii) Intermittent Contact. The design should ensure that random intermittent contact between metallic and/or metallized parts (such as could cause unwanted radio interference or degradation of the components due to sparking) will not occur.

(iii) High Pressure Refueling and Fuel Transfer. Where provision is made for high pressure refueling and/or high rates of fuel transfer, it should be established, by test, or by consultation with the appropriate fuel manufacturers, that dangerously high voltages will not be induced within the fuel system. If compliance with this requirement involves any restriction on the types of fuel to be used or on the use of additives, an appropriate operating limitation should be established under FAR 29.1501(a). The critical refueling rates are related to the rotorcraft refueling installations, and the designer should seek the advice of fuel suppliers on this problem.

(A) With standard refueling equipment and standard aircraft turbine fuels, voltages high enough to cause sparking may be induced between the surface of the fuel and metal parts of the tank at refueling rates above approximately 250 gal/min. These induced voltages may be increased by the presence of additives and

contaminants (e.g., anti-corrosion inhibitors, lubricating oil, free water) and by splashing or spraying of the fuel in the tank.

(B) The static charge can be reduced as follows:

(1) By means taken in the refueling equipment such as increasing the diameter of refueling lines and designing filters to give the minimum of electrostatic charging, or

(2) By changing the electrical properties of the fuel by the use of anti-static additives and thus reducing the accumulation of static charge in the tank to a negligible amount.

(4) Primary and Secondary Bonding Paths.

(i) Primary bonding paths are those paths that are required to carry lightning discharge currents. These paths should be of as low an electrical impedance as is practicable. Secondary bonding paths are those paths provided for other forms of bonding.

(ii) Where additional conductors are required to provide or supplement the inherent primary bonding paths provided by the structure or equipment, the cross-sectional area of such primary conductors made from copper should be not less than $3mm^2$ except that, where a single conductor is likely to carry the whole discharge from an isolated section, the cross-sectional area should be not less than $6mm^2$. Aluminum primary conductors should have a cross-sectional area giving an equivalent surge carrying capacity.

(iii) Primary bonding paths should be used for--

(A) Connecting together the main grounding points of separable major components which may carry lightning discharges,

(B) Connecting engines to the main aircraft ground,

(C) Connecting to the main aircraft ground all metal parts presenting a surface on or outside of the external surface of the rotorcraft, and

(D) Conductors and lightning diverters on external non-metallic parts.

(iv) Where additional conductors are required to provide or supplement the inherent secondary bonding paths provided by the structure or equipment, the cross-sectional area of such secondary conductors made from copper should be not less than $1mm^2$.

(5) Resistance and Continuity Measurements. Measurements should be made to determine the efficacy of the bonding and connection between at least the following:

(i) Primary Bonding Paths

(A) The extremities of the fixed portions of the rotorcraft and such fixed external panels and components where the method of construction and/or assembly leads to doubt as to the repeatability of the bond, e.g., removable panels.

(B) The engines and the main aircraft ground.

(C) External movable metal surfaces or components and the main aircraft ground.

(D) The bonding conductors of external non-metallic parts and the main aircraft ground.

(E) Internal components for which a primary bond is specified and the main aircraft ground.

(ii) Secondary Bonding Paths.

(A) Metallic parts, normally in contact with flammable fluids, and the main aircraft ground.

(B) Isolated conducting parts subject to appreciable electrostatic charging and the main aircraft ground.

(C) Electrical panels and other equipment accessible to the occupants of the rotorcraft and the main aircraft ground.

(D) Grounding connections that normally carry the main electrical supply and the main electrical return. The test on these connections should be such as to ensure that the connections can carry, without risk of fire or damage to the bond, or excessive volt drop, such continuous normal currents and intermittent fault currents as are applicable.

(E) Electrical and electronic equipment and the main earth, where applicable, and as specified by the rotorcraft manufacturer.

(F) Static dischargers and the main rotorcraft structure.

AC 29.611. § 29.611 INSPECTION PROVISIONS.

a. Explanation. The rotorcraft must have access panels, or openings, that will allow for proper maintenance and/or adjustment of the rotorcraft systems.

(1) The rule states: There must be means to allow close examination of each part that requires recurring inspection, adjustment for proper alignment and functioning, or lubrication.

(2) “Structural” or load-carrying access panels may be used to comply with the rule. Structural panels should have stencils or permanent labels (§ 29.1541(a)(2)) stating the panels must be installed prior to ground or flight operation.

(3) Holes or “nonstructural” access panels should be used whenever possible.

b. Procedures.

(1) The determination of compliance can be accomplished in conjunction with the following activities:

(i) Reviewing type design drawings.

(ii) Conformity inspections accomplished during certification testing.

(iii) Be evaluated during the control system proof and operation tests (§§ 29.681 and 29.683).

(iv) During type inspection tests and functioning and reliability testing.

(2) Equipment requiring frequent inspections (at less than 25-hour intervals), lubrication, or adjustments should be accessible through “nonstructural” doors. Areas or items requiring daily attention should be accessible through “nonstructural” doors since properly rated maintenance personnel are required to “open and close,” or reinstall structural panels and special design features, such as multiple pins and latches, are generally necessary for structural doors.

(3) If the rotorcraft is subject to an FAA Maintenance Review Board Approval Program, further review of the rotorcraft inspection provisions will be obtained.

AC 29.613. § 29.613 (Amendment 29-17) MATERIAL STRENGTH PROPERTIES AND DESIGN VALUES.

a. Explanation. The rule requires the use of materials that have a known minimum strength value. The structure must not be understrength and must be designed to minimize fatigue failure.

(1) Material design values in certain specified documents may be used. The FAA/AUTHORITY may approve other material design values thus allowing the applicant greater flexibility in selection of materials by proving their strength properties and design values as stated in § 29.613(d).

(2) Other materials that may be new or are not included in the specified documents may be tested and design values established as provided by § 29.613(a) and (d).

(3) Section 29.613(d) requires the selection of materials that will retain design values and properties in the type of service environment and for the length of service time intended for the structure.

(4) Section 29.613(c) is an objective rule concerning minimizing fatigue failures. Paragraph AC 29.571, § 29.571, concerns quantitative fatigue substantiation requirements.

b. Procedures.

(1) The properties and design values in the documents noted in the rule may be used.

(2) MIL-HDBK-5, Metallic Materials and Elements for Flight Vehicle Structure, Chapter 9, contains procedures for establishing design values of additional materials. Uniform means of presenting the data is also contained in this chapter.

(3) Design values and properties must include effects of the service environment and service time. An example is exposure at elevated temperatures on the ultimate tensile strength of 7079-T6 aluminum alloys as found in figure 3.7.4.1.1(c) of MIL-HDBK-5C.

(4) The probability of disastrous fatigue failures must be minimized. This may be accomplished by using design features usually identified as fail-safe features, such as the following, which were obtained from Advisory Circular 20-95. See paragraph AC 29.571 for the fatigue requirement information.

(i) Selection of materials and stress levels that provide a controlled slow rate of crack propagation combined with high residual strength after initiation of cracks (lightly loaded structures).

(ii) Use of multipath construction and the provision of crack stoppers to limit the growth of cracks.

(iii) Use of composite (multielement) duplicate structures so that a fatigue crack or failure occurring in one element of the composite (multielement) member will be confined to that element and the remaining structure will still possess adequate load-carrying ability.

(iv) Use of backup structure wherein one member carries all the load, with a second member available and capable of assuming the extra load if the primary member fails.

(v) Design to permit detection of cracks including the use of crack detection systems, in all critical structural elements before the cracks can become dangerous or result in appreciable strength loss, and to permit replacement or repair.

(5) Acceptable standards for pressurized containers or cylinders, such as cylinders of nitrogen, used to inflate emergency floats may be found in 49 CFR 178 Subpart C, §§ 178.36 through 178.68. Specifically, § 178.44 concerns standards for steel cylinders used in aircraft that are subjected to at least 900 PSI service pressure. This standard includes strength, test, material property, inspection, quality, design features, identification and inspection report requirements. As an example, § 178.44-14, entitled “Hydrostatic Test,” requires that each cylinder must be (proof) tested to at least 5/3 times the service pressure. Section 178.44-16, entitled “Burst Test,” also states that one cylinder taken at random out of each lot of cylinders shall be hydrostatically tested to destruction.

(6) Other design criteria may be developed and approved under the provisions of FAR Part 29 as a unique part of the aircraft type design.

AC 29.613A. <u>§ 29.613 (Amendment 29-30) MATERIAL STRENGTH PROPERTIES AND DESIGN VALUES</u>.

a. <u>Explanation</u>. Amendment 29-30 added explicit probability standards criteria to § 29.613(b). This amendment also provided for testing or proving the strength of selected individual items rather than conducting coupon tests to develop generic material strength properties that would be used for design purposes.

b. <u>Procedures</u>. The basic procedures of paragraph AC 29.613 still apply, except:

(1) Probability criteria common with MIL-HDBK-5D are explicitly allowed to determine strengths for metallic materials whose data are not available in MIL-HDBK-5D. These specific probability criteria should be used in conjunction with MIL-HDBK-17B whenever determining material strength properties for non-metallics. (Also, reference paragraph AC 29 MG 8.)

(2) New § 29.613(e) provides for the premium selection of materials. The premium selection of materials method uses a specimen from each individual item (part) to determine its properties before its use is allowed. This is a highly specialized and possibly costly method which applies only to parts that have areas available from which specimens can be obtained without destroying the part. The rotorcraft type design data of those parts made from premium selection should have the necessary information, such as minimum allowable strength, on the part drawing.

AC 29.619. § 29.619 SPECIAL FACTORS.

a. Explanation.

(1) This is a general rule to complement other rules. Special factors are employed for reasons cited in the rule to ensure an airworthy aircraft structure. The 1.5 ultimate load factor in § 29.303 is multiplied by a special factor as specified in the rule.

(2) Specific factors are prescribed for castings and fittings in §§ 29.621 and 29.625 respectively. Factors may be prescribed for bearings with free clearance as stated in § 29.623. In addition, any other factor may be prescribed "to ensure that the probability of the part being understrength because of the uncertainties specified in § 29.619(a) "is extremely remote."

b. Procedures.

(1) One example of fitting factor use follows:

1,000 pounds limit design load x 1.15 fitting factor x 1.5 ultimate load factor equals 1,725 pounds ultimate design load.

(2) Other specific factors may be similarly applied. Refer to §§ 29.623, 29.625, 29.685, and 29.785.

(3) Other factors may be imposed as cited in the rule. Advisory Circular 20-107, paragraphs 5 and 6, are examples of requiring tests of component and subcomponent structure to account for variability of strength and stiffness of composite structures. Factors appropriate for the particular design are obtained and used in substantiation of the composite structure.

(4) The rule complements §§ 29.603 and 29.613. Regardless of the rule invoked, the variability of the material and/or assembly properties must be accounted for.

(5) Ground resonance can occur due to flexibility in the rotor pylon restraint system as well as with landing gear flexibilities. This evaluation should include variations in stiffness and damping of the rotor pylon restraints that may occur in service (reference "Ground Vibrations of Helicopters," M.L. Deutsch, JAS, Vol. 13, No. 5, May 1946).

AC 29.621. § 29.621 CASTING FACTORS.

a. Explanation. Casting design, test, and inspection criteria are included in this rule for critical and noncritical structural castings. Hydraulic or other fluid containers are

not subjected to “structural loads” but are subject to pressure testing as a part of hydraulic or other flight systems. Critical and noncritical castings are defined in the rule.

(1) Factors, tests, and inspections are specified for structural castings. Additional factors, tests, and inspections may be applied, as prescribed by §§ 29.603, 29.605, or 29.613, for foundry quality control.

(2) For castings that have surfaces subject to bearing structural design loads, the casting factor need not exceed 1.25 with respect to bearing stresses and need not be used with respect to the bearing surfaces if the bearing factor of § 29.623 exceeds the applicable casting factor.

(3) Critical castings must have a casting factor not less than 1.25 and must receive 100 percent inspection as specified including radiographic inspection. Static test requirements are also specified in addition to the inspection requirements.

(4) Noncritical structural castings may have a casting factor as small as 1.0 with attendant increased inspection and quality control requirements. Use of larger casting factors reduces the inspection and quality control requirements.

(5) Structural static and fatigue substantiation, by test or analysis, are still required in addition to any casting static tests required by this rule.

b. Procedures.

(1) The rotorcraft castings should be classified as critical, or noncritical, or nonstructural, or fluid container as soon as possible in the certification program. The applicant should then be prepared to propose the tests required for certification.

(2) The casting factors and associated inspection requirements dictated by § 29.621(c) and (d) are shown below:

INSPECTION REQUIREMENTS

	CRITICAL CASTINGS <(2)>		NONCRITICAL CASTINGS <(3)>	
CASTING FACTOR RANGE <(1)>	FAA REQUIRE-MENT 29.621(c)	OTHER CLASSIFICATION	FAA REQUIRE-MENT 29.621(d)	OTHER CLASSIFICATION
2.01 OR GREATER	<(7)>		<(4)>	
1.50 TO 2.00	<(7)>		<(5)>	
1.250 TO 1.499	<(7)> <(8)>		<(6)>	
1.00 TO 1.249	NOT ALLOWED	NOT ALLOWED	<(7)> <(8)> <(9)>	

<(1)> Ultimate load = Casting factor x 1.5 x limit load. CAUTION: For casting factor range of 1.25 to 1.5 see yield test requirements of NOTE <(8)>. The mechanical properties to be used for analysis shall be based on the tabulated values of MIL-HDBK-5 or other approved sources, reference § 29.613.

<(2)> Critical castings are those castings whose failure would preclude continued safe flight and landing or result in injury to any occupant, reference § 29.621(c).

<(3)> Noncritical castings are castings other than those defined by NOTE <(2)>.

<(4)> Each casting shall receive 100 percent visual inspection.

<(5)> Each casting shall receive 100 percent visual and reduced magnetic particle or penetrant inspection or approved equivalent methods.

<(6)> Each casting shall receive 100 percent visual and reduced radiographic and magnetic particle or penetrant inspection, or approved equivalent methods.

<(7)> Each casting shall receive 100 percent inspection by visual, radiographic and magnetic particle or penetrant inspections or approved equivalent methods.

<(8)> Three sample castings shall be static tested and shown to meet:

No failure at 1.25 x 1.5 x limit load, and
No yielding at 1.15 x limit load.

<(9)> Castings shall be procured to a specification that guarantees the mechanical properties of the material in the casting and provides demonstration of these properties by test of coupons cut from the castings on a sampling basis.

This chart may be included in the casting test proposal report. It is recommended that the applicant include in the test proposal report additional information such as shown in paragraph AC 29.621b(3).

(3) The casting test report may include the following sections or items in a Part I of the report. The report may also have a Part II that contains the test results as shown in the following example report. The following sections are a recommended format content of the report. Appropriate changes should be made as desired to accommodate the applicant's system.

EXAMPLE OF REPORT
INTRODUCTION

This report presents the proposal for the static test of the castings used on the Model XYZ. The castings will be tested in compliance with Federal Aviation Regulations, Part 29, § 29.621. The purpose of this test is to substantiate the structural strength of the castings used on the Model XYZ. Part II of this report, which will be published after static tests have been completed, will present test results.

All test specimens will be selected as radiographic standards of acceptance for the particular castings (see Test Specimen). Additional information on selecting the specific castings may be included in the test specimen section of this report.

Load sheets giving direction and magnitude of loads for each of the castings are presented in numerical order by part number at the end of this report. The test loads and design criteria for the castings are discussed in detail in the test loads section of this report.

The test loads will be applied and reacted using mating aircraft parts or special fixtures which simulate the mating parts. The methods and apparatus to be used for the static tests of the castings are discussed in the apparatus and method section of this report.

Testing will be conducted in…(location).

TEST SPECIMEN

The castings which will be tested are listed in numerical order in figure AC 29.621-2. Those castings which, after structural analysis, show less than a 1.5 casting factor will be tested. All directions are given with reference to a forward facing position in the rotorcraft.

On the basis of a radiographic examination, the three castings which are of the poorest acceptable quality in the first production lot of castings will be selected as test specimens. The poorest of the three castings will be selected as the initial test casting and its radiograph or ASTM standard will be used as the standard for accepting future castings of the particular part unless later standards are approved. Three castings must be tested for each critical condition for each part.

Conformity Inspection

Each machined casting will be subjected to an FAA/AUTHORITY conformity inspection prior to testing to determine compliance with the type design drawings. A conformity report for each casting may be incorporated in Part II, Test Results, of this report.

The test specimen will be permanently marked or defaced after testing to preclude its use on a rotorcraft.

See figure AC 29.621-2 for an example of a convenient means of listing castings.

TEST LOAD

The test load(s) to be applied to each casting represents the critical loading condition(s) for that casting. The critical conditions on each of the castings were determined by the design criteria and substantiating data approved by the FAA/AUTHORITY.

The design criteria for all of the castings to be static tested may fall into one of two categories. The load factors and structural acceptability requirements for each category are discussed below. Casting factors that are included on the load sheets of each part do not apply in the discussion below. (See paragraph AC 29.621b(2) for casting factors.)

Castings Designed to Limit Load Conditions

A structural analysis of each test casting showing the critical design limit load conditions is given in the data, (reference report number here). The load factors for the static test of the castings are as follows:

1.15 x design limit load = design yield load
1.50 x design limit load = design ultimate load

Castings Designed Only to Crash Landing Conditions

The castings in this category were designed using a crash landing load factor for the design ultimate load. The design yield load criteria of 1.15 x limit load need not apply to these castings. The test loads for these castings may be given in terms of design ultimate load on the individual casting load sheets shown in Part I of this report.

Test Procedures

Depending on the results of the initial static test of each casting, the following procedure will be used.

a. If in the initial test of critical castings the casting is found to have a casting factor of 1.5 (1.5 x design ultimate load), the casting will be considered acceptable and no further tests will be conducted.

b. If in the initial test(s) the critical casting is found to have a casting factor less than 1.5 but equal to or greater than 1.25, two additional castings will be tested for each critical load condition. Each must also show a minimum casting factor of 1.25.

c. If in the initial test, or in one of two additional tests, a casting shows a casting factor less than 1.25 times design ultimate or yields prior to reaching 1.15 times design limit load, the casting will be redesigned and retested. The yield criteria are also applicable to the first two procedures with the exception of critical castings designed to crash landing conditions.

TEST APPARATUS AND METHOD

The Model XYZ casting static tests will be conducted using fixtures designed to simulate the installation of the castings in the aircraft. Where practical, mating aircraft parts will be used to apply and react test loads. When practical, the static tests will be conducted with mating castings assembled when the critical loads for the mating castings are compatible; otherwise, fixtures simulating the mating parts may be designed and fabricated for the tests. Assembly hardware used to mount test castings will be the same as hardware used on the rotorcraft. All bolt torques and other assembly notes will conform to the type design assembly instructions.

The tests will be conducted using calibrated load measuring devices such as hydraulic cylinders and pressure gages, load cells, strain gage bridges, or dead weights.

Deflections of the casting may be measured using graduated dial indicators or scales in all tests. The deflection indicators will be based or mounted on the casting and will measure casting deflection only, when possible, otherwise the indicators will be based on the fixture and measure deflection of the casting relative to the fixture. Deflection readings will be made at 20 percent increments of limit load through 100 percent of limit load and at 115 percent of limit load. These increments may be changed if necessary. Permanent deformation readings will be made after relieving 115 percent and 150 percent of limit load.

See figure AC 29.621-1 as an example of a load sheet.

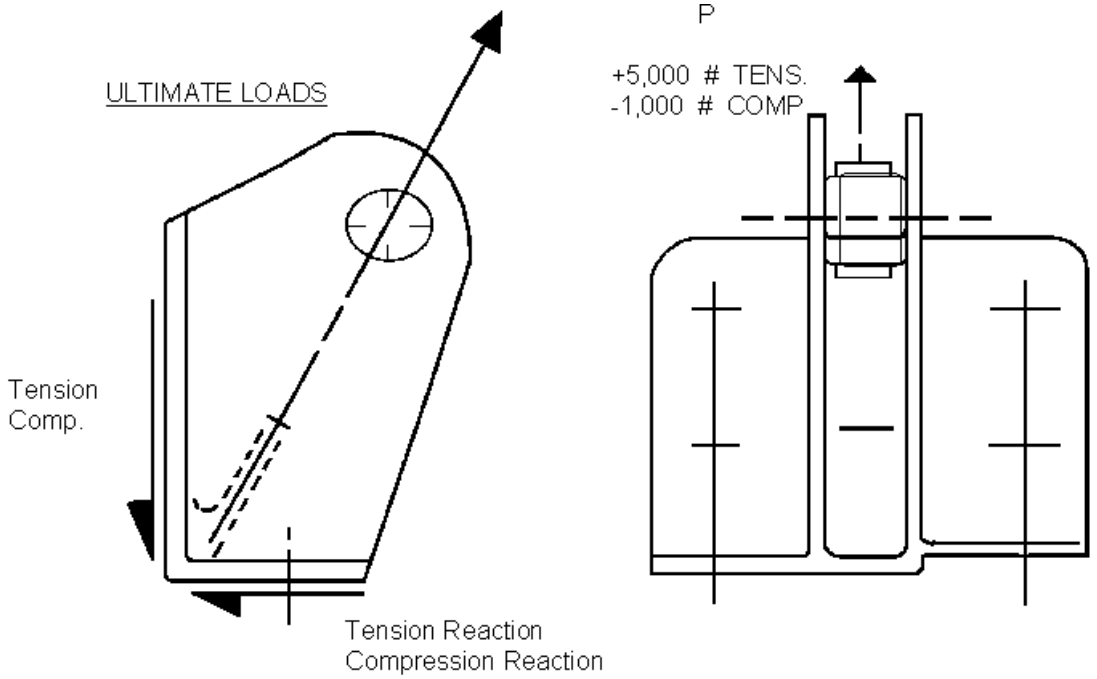

FIGURE AC 29.621-1
EXAMPLE OF CASTING LOAD SHEET
RETRACT ACTUATOR SUPPORT - LANDING GEAR

Include spherical bearing with clamped-up bolt and a link in the test setup to confirm the stability. Loads are based on a jam condition with actuator operating at 1,700 PSI pressure maximum.

A 1.25 casting factor is included in these loads.

These loads were derived from data in approved structural loads and analysis report.

END OF SAMPLE REPORT

(4) The format of the previous guidance material may be changed to accommodate the applicant's method of data presentation.

(5) Nonstructural castings may be tested and included in the test report.

(6) Cast fluid containers, including hydraulic fluid containers, may be tested as prescribed in other rules of FAR Part 29 and a test proposal and test results report may be included in the casting test report or an appropriate report may be referenced for convenience. We recommend use of one report to contain test data or reference to test data for all castings used on the rotorcraft.

FIGURE AC 29.621-2 EXAMPLE

CASTINGS TO BE STATIC TESTED FOR MODEL XYZ

CASTING NO.	MACHINE OR ASSY. NO.	NAME AND LOCATION	MATERIAL	REF. LOAD SHEET FIG. NO.
		Base Assembly, Pilot's Collective Column		

AC 29.623. § 29.623 BEARING FACTORS.

a. Explanation.

(1) The rule requires use of a minimum bearing factor in free fit joints to account for effects of typical relative motion. A minimum value is not specified in the rule. The factor, appropriate for the application, is applied to the ultimate bearing strength of the softest material used as a bearing. A definition of free fit (clearance fit) is noted in Subparagraph b(7) below.

(2) Specific bearing factors are specified by § 29.685(e) for control system joints subject to angular rotation. These factors are applied to the ultimate bearing strength of the softest material used as a bearing in the control system. Control systems ball, roller, or needle bearings are covered by § 29.685(f).

(3) MIL-HDBK-5C, paragraph 8.3, refers to design standards for plain or journal bearings or bushings. These standards are found in Air Force Systems Command Design Handbook 2-1, Airframe, Chapters 2 and 6.

b. Procedures.

(1) Control system joint bearings are discussed under paragraph AC 29.685, § 29.685 of this document but the bearing factors are noted here for convenience. Section 29.685(e) requires a 2.0 bearing factor for cable systems and a 3.33 bearing factor for push-pull systems other than ball and roller bearing systems. The manufacturer's static, non-Brinell rating of ball and roller bearings may not be exceeded as stated in § 29.685(f).

(2) A landing gear pivot, grease lubricated, plain bearing is one example of a free fit subject to pounding or vibration. A bearing factor of 2.0 may be used or another factor may be proven for grease lubricated plain bearing or bushing to account for the anticipated higher loads caused by pounding or vibration. See subparagraph AC 29.623b(6) for ball or roller bearings.

(3) A typical engine mount bolt installation with a plain bearing having a free or loose fit (not interference fit), is another example of a sleeve bearing application subject to a design bearing factor. As an example, a bearing factor of 1.85 may be applied to the design loads on the softest material reacting the bearing loads. A different factor will be acceptable if proven. For example, the design limit load may be calculated for a .312-inch-diameter bolt in a 2-inch-long bearing. The bearing projected area is .312 x 2 = .624-inch-square. The design limit load is 3,000 pounds. The design limit bearing stress is 3,000 pounds/.624-inch-square x 1.85 = 8,894 PSI. If a free or loose fit is not used; i.e., tighter than free fit, a bearing factor is not required.

(4) Military standard part specification, MS 21240, "Bearing, Sleeve Plain, TFE Lined" and MS 21241, "Flanged Bearing, Sleeve Plain, TFE Lined contain allowable

load ratings, static, and dynamic that apply to the particular use of the bearing. An appropriate bearing factor should be applied to the static rating. Military Specification MIL-B-8943A, Amendment 3, “Bearing, Sleeve, Plain, and Flanged, TFE Lined” (temperature range -65° F to 250° F) shows that MS 21240 and MS 21241 sleeve bearings have been superseded by MS 1934/1 and MS 81934/2 sleeve bearings, respectively. Military Specification MIL-B-81934, Amendment 2, “Bearings, Sleeve, Plain and Flanged, Self-Lubricating,” uses TFE liners. These bearings are intended for use in a temperature range from -65° F to +325° F. Whenever a sleeve bearing is used an appropriate bearing factor should be applied to the static rating that is contained in the specification or standard. Other sleeve bearings are contained in standards NAS 72 through NAS 77, NAS 537, and NAS 538. The installation design information is only contained in standards NAS 72 through NAS 74. These types of plain sleeve bearings are designed for clamping to the shaft or bolt with relative motion occurring on the bearing outside diameter. An appropriate bearing factor is required for the application.

(5) The minimum fitting factor 1.15, specified by § 29.625, must be applied as specified to account for load distribution at the fitting. This fitting factor need not apply to plain or journal “bearings” whose “bearing factor” exceeds 1.15.

(6) For airframe and landing gear structural joints, the manufacturer’s static, non-Brinell rating of ball and roller bearings may not be exceeded. ABEC Class 1 bearings or better quality bearings may be used in airframe structural joints and landing gear; ABEC Class 3, 5, or 7 bearings should be used in rotor pivot joints. The non-Brinell rating includes consideration of the bearing factor and no other bearing factor is required.

(7) A free fit was described in American Standards Association (ASA) Standard B4a-1925. The “free fit” clearances and tolerances of this old standard are now called Class RC6, Medium Running Fit, in ASA Standard B4.1, 1955. As an illustration using these standards, a 1-inch diameter shaft and a plain sleeve bearing would have a clearance ranging from .0014 to .0040 inch.

AC 29.625. <u>§ 29.625 FITTING FACTORS</u>.

a. <u>Explanation</u>. A 1.15 factor is specified to assure that the calculated load and stress distribution within any fitting is conservative. Application of the factor is excluded or excepted as stated in the rule.

b. <u>Procedures</u>.

(1) The factor may be applied to the calculated load or stress for the fitting.

(2) The structural substantiating data for the rotorcraft, including the rotor system, must include the prescribed fitting factor. The rotor system includes the flight control system rotor head and hubs and rotor blade attachments.

AC 29.629. § 29.629 FLUTTER.

a. Explanation.

(1) The rotorcraft must be free from flutter.

(2) Section 29.251 vibration is an associated flight requirement concerning flight demonstrations. See paragraph AC 29.251 for this standard.

(3) Section 29.571(a)(3) concerns in-flight measurement of loads or stresses.

b. Procedures.

(1) Freedom from flutter may be shown by analysis or appropriately instrumented flight flutter tests.

(2) The flight loads survey proposal submitted for compliance with § 29.571 may also contain tests to fulfill compliance with § 29.629. The flight loads survey program encompasses the envelope of design airspeed and rotor RPM, and sufficient aerodynamic excitation is generally present to excite any latent flutter modes.

(3) Flight loads survey data or flight flutter test data submitted should be reviewed to assure that excessive oscillatory loads of rotors or surfaces will not be encountered.

AC 29.629A. § 29.629 (Amendment 29-40) FLUTTER AND DIVERGENCE.

a. Explanation. Amendment 29-40 adds the requirement that each aerodynamic surface of the rotorcraft must be free from divergence in addition to the requirement of freedom from flutter. The aeroelastic stability evaluations required by this regulation include flutter and divergence. Compliance with this regulatory requirement should be shown by analysis and/or flight test, supported by any other means found necessary by the Administrator. The aeroelastic evaluation of the rotorcraft should include an investigation of the significant elastic, inertia and aerodynamic forces on all aerodynamic surfaces (including rotor blades) and their supporting structure. The forces associated with the rotations and displacements of the plane of the rotors should be considered.

b. Procedures.

(1) It should be shown by analysis that the rotorcraft is free from flutter and divergence (unstable structural distortion due to aerodynamic loading) under any condition of operation including:

(i) Airspeeds up to 1.11 V_{NE} (power on and power off).

(ii) Main rotor speeds from 0.95 x the minimum permitted speed up to 1.05 x the maximum permitted speed (power on and power off).

(iii) The critical combinations of weight, CG position, load factor and altitude.

(2) Adequate tolerances should be established on those physical quantities which could affect flutter, divergence, or structural distortion to a degree sufficient to cause a significant deterioration in the characteristics of the rotorcraft, such that likely variations in these quantities will not result in flutter or divergence within this envelope.

(3) All physical properties which could contribute to a reduction in the predicted flutter or divergence margins are to be investigated, including stiffness, damping, mass balance, and aerodynamic coefficients. Parametric variations should be sufficient to cover any possible variation due to manufacturing and maintenance tolerances and environmental factors, and to provide conservatism where estimated values are used. Linear approximations to non-linear variations may be used.

(4) Where approval for flight in icing conditions is being sought, the effects of ice accretion on unprotected surfaces, including that which might occur as a result of a single system malfunction, should be considered.

(5) Rotorcraft should be demonstrated by suitably instrumented flight tests to be free from flutter and divergence at all combinations of forward speed and rotor RPM (power off and power on), up to 1.11 V_{NE} and 1.05 times the maximum permitted RPM (except that combinations of speed in excess of V_{NE} and rotor speed in excess of the maximum permitted are not required to be tested). Flight tests to demonstrate compliance with flutter and divergence requirements may normally be addressed simultaneously with testing in compliance with §§ 29.251, 29.571, 29.1505 and similar regulations. Special flight tests for flutter and divergence would not normally be required.

(6) Stabilizing surfaces may be addressed by analysis alone if flutter and divergence margins can be shown to provide adequate conservatism. Flight testing at 1.05 times the maximum power-on rotor speed may also be waived if it is considered impractical, and can be adequately addressed by analysis.

AC 29.631. <u>§ 29.631 (Amendment 29-40) BIRD STRIKE</u>.

a. <u>Explanation</u>. Amendment 40 adds requirements for continued safe flight and landing after a bird strike. Compliance with § 29.631 should be shown for a 2.2 lb (1.0 kg) bird at a relative velocity equal to the lesser of V_{NE} or V_H at altitudes up to 8,000 feet. For Category A certification, the rotorcraft should be capable of continued safe flight and landing after the described bird strike. For Category B certification, the rotorcraft should be capable of a safe landing after the bird strike.

b. Procedures. For compliance with FAR 29.631, it should be demonstrated by test or analysis supported by test evidence that,

(1) The windshields will withstand, without penetration, and,

(2) The rotorcraft is capable of continued safe flight and landing following impact with a 2.2-lb (1.0 kg) bird at V_{NE} or V_H (whichever is the lesser) at altitudes up to 8,000 feet.

SUBPART D - DESIGN AND CONSTRUCTION

ROTORS

AC 29.653. § 29.653 (Amendment 29-3) PRESSURE VENTING AND DRAINAGE OF ROTOR BLADES.

a. Explanation. The rule requires each rotor blade to be provided with venting and drainage means (i.e., holes, etc.) or the blade must be sealed and designed to withstand internal pressure.

b. Procedures. Although the rule provides for venting and drainage features, recently certificated blades have been designed to be sealed and to sustain the "maximum pressure differentials expected in service." For modern blade designs, the internal pressure buildup due to environmental effects and centrifugal acceleration effects (near the tip) can be readily sustained with moisture sealing accomplished. The use of sealed blades is highly advantageous and recommended because of the possibility for severe corrosion damage resulting from trapped moisture and because of the difficulty in finding internal corrosion damage by use of field level inspections.

AC 29.659. § 29.659 (Amendment 29-3) MASS BALANCE.

a. Explanation. The rule requires that mass balancing of rotors and blades be provided, as necessary, to prevent excessive vibration and flutter. Further, the rule requires structural substantiation of the mass balance installation.

b. Procedures.

(1) The weight, geometry, and location of rotor and blade mass balance devices are determined as the requirements of §§ 29.571 and 29.629 are met.

(2) The structural substantiation should show static strength to meet the maneuver and gust loads of §§ 29.337, 29.339, and 29.341. In addition, the main rotor loads of § 29.547(c) should be substantiated. The fatigue strength of the mass balance devices (including structural supports) should meet the requirements of § 29.571.

(3) In addition to the appropriate strength requirements, some recent designs have included features which trap the balance weight inside a limited area even if the primary attachment means (adhesive, bolts, etc.) fail. This type of design feature is recommended because of the severe loading environment to which balance devices are subjected.

AC 29.661 § 29.661 (through Amendment 29-3) ROTOR BLADE CLEARANCE.

a. Explanation.

(1) This paragraph discusses the regulatory requirement contained in § 29.661. That requirement is that there must be enough clearance between the rotor blades (main and tail rotor blades) and other parts of the structure to prevent the blades from striking any part of the structure during any operating condition.

(2) In the past, some rotorcraft that have been shown to comply with § 29.661 during the certification process have experienced subsequent accidents involving in-flight contact between the main rotor and airframe (rotor/airframe contact). Completion of developmental and TIA flight testing without a rotor/airframe contact incident has proven not to be adequate demonstration of compliance with § 29.661 in all cases.

(3) Historically, in-flight rotor/airframe contact accidents have occurred as a result of mast bumping, rotor stall, or excessive rotor flapping due to control manipulation. For some rotorcraft, a more thorough examination may be required to ensure adequate clearances.

b. Procedures. Testing should be conducted by the applicant, prior to FAA/AUTHORITY participation, to ensure that the rotorcraft is in compliance with § 29.661 in all areas of the envelope during all operational maneuvers expected throughout the life of the aircraft. The tests should be performed concurrently with performance, flight characteristics, and flight loads testing. Tests should include:

(1) A blade flapping survey to determine flapping angles/margins, blade bending, and blade clearance from the entire airframe. Data may be gathered from instrumented flapping hinges, instrumented blades, high-speed video from airframe mounted cameras, a chase aircraft, or other acceptable means.

(2) Determine that margin exists between the minimum rotor RPM encountered during testing for compliance with § 29.143(d) and the RPM (power off) at which analysis shows that the rotor will experience a significant stall. A significant stall condition may be defined by the rotor reaching an RPM from which normal operating RPM is unrecoverable due to drag on the main rotor blades or, a stall that results in excessive main rotor flapping. The rotor RPM decay rate under the critical conditions of weight, density altitude, minimum approved power-on rotor RPM must provide a margin between the minimum rotor speed achieved during demonstration of compliance with §§ 29.87 and 29.143(d) and the analytically derived rotor stall RPM for the same conditions. For example, the minimum rotor RPM resulting during H-V tests must allow for a margin above the rotor stall value to allow for variations that may occur during operational flying.

(3) During parts of the certification flight test program, frangible devices (wood dowels) or other means of measuring clearance, may be requested to confirm that the clearances shown in the drawings and verified during company flight tests are adequate in all operating conditions. Balsa wood dowels or styrofoam pads may be clamped to the aft part of the fuselage and cabin roof within the rotor arc. Such devices may be

especially helpful in determining clearance during autorotation and controllability testing under FAR 29.143. If such measuring devices are used, the type inspection report should contain a record of clearance found during the tests. During TIA flight testing, it is not necessary to precisely determine the clearance but only necessary to determine "enough clearance" as stated in the rule.

AC 29.663. § 29.663 GROUND RESONANCE PREVENTION MEANS.

a. Explanation.

(1) This section, adopted in Amendment 29-3, and amended by Amendment 29-30, requires reliability and damping action investigation for the ground resonance prevention means which typically includes the shock struts. Section 29.1529 requires associated maintenance information in the maintenance manual. The probable range of variations in service, not just the allowable range, should be established and investigated as prescribed. This probable range includes operation on the ground, or other appropriate landing surface applicable to the rotorcraft design. Quantitative test data are generally obtained in compliance with this rule although analysis or tests may be employed. The preamble to Amendment 29-3 contains additional information.

(2) Note that the maintenance information is not contained in the approved mandatory section of the maintenance manual.

(3) Paragraph AC 29.241 concerns demonstrating freedom from ground resonance during certain applicant and TIA verification evaluations or tests of the rotorcraft. Section 29.241 complements the requirements of § 29.663. As noted in paragraph AC 29.241, a specific requirement for a ground vibration survey was removed from CAR Part 7. However, § 29.663 was adopted by Amendment 29-3 to investigate possible sources of ground resonance and to assure that the reliability of the ground resonance prevention means; i.e., dampers, shock struts, etc., would preclude the occurrence of ground resonance. The total rotorcraft system, including landing gear, struts, tires, etc., is evaluated under this standard.

(4) Viscous dampers in the rotor head have been used for many years to prevent ground resonance. Modern rotorcraft designs may also use elastomeric dampers and may use elastomeric bearings in the rotor head and rotor pylon attachment to the airframe. The standard applies to viscous and elastomeric dampers. The “probable” range in damping shall be investigated. The standard also requires investigation of the probable range of variations of these dampers, whether viscous or elastomeric, and elastomeric bearings to preclude ground resonance.

(5) Ground resonance can occur due to flexibility in the rotor pylon restraint system as well as with landing gear flexibilities and/or shock struts. See paragraph AC 29.663b(2) for an explanation. An analysis may be done to show the effect of the rotor pylon mount stiffness on ground resonance stability. If the analysis

shows that rotor pylon mount stiffness could affect ground resonance, the evaluation should include variations in stiffness and damping of the rotor pylon restraints that may occur in service (reference “Ground Vibrations of Helicopters,” M.L.. Deutsch, JAS, Vol. 13, No. 5, May 1946).

b. Procedures.

(1) The reliability of the means for preventing ground resonance may be substantiated as stated in the standard. An analysis report or a test proposal and subsequent test report may be used to show compliance. The probable range of variations, in service, of the damping action are an important part of the assessment. The test may be conducted in conjunction with the testing required by § 29.241. See paragraph AC 29.241.

(i) Analysis and tests may be used.

(ii) Reliable service history of identical or closely similar systems may be used. The materials and fluids used, clearance or fits, seals, and physical installation are important items to be evaluated and considered for “closely similar” systems.

(iii) Testing of the complete rotorcraft may be used to prove that malfunction of a single means of the damping system will not cause ground resonance. One method of demonstrating acceptable compliance is by removing all seals, if practicable, from one damper. Another method is to remove all or most of the fluid, in conjunction with considering the allowable ranges of damping of the other parts of the rotorcraft damping system and operating the rotorcraft throughout the rotor speed range from start to maximum rotor speed. Investigation of elastomeric dampers may require innovative test procedures and preliminary discussions of these prior to preparation of a test proposal. The rotorcraft cyclic control should be displaced as noted in paragraph AC 29.241 to assure that the possible rotorcraft resonance frequencies are excited. If vibrations are damped in all tests, the damping system is satisfactory. Each critical rotor damper and landing gear damper, which includes shock struts and tires, should simulate a malfunction to comply with the standard. The testing discussed, however, could become very extensive if one were to attempt to test all combinations of all maintenance adjustments of all components which contribute to the prevention of ground resonance, while at the same time rendering each of the pertinent components ineffective in turn and then repeating all of the maintenance tolerance testing each time. Fortunately, rational analytical methods are available which will permit the evaluation of such combinations so that only the combinations with the least amount of margin used are physically tested.

(2) The pylon damper variation can affect ground resonance. The variations in stiffness and/or damping of pylon mounts should be evaluated except the pylon mounts on contemporary conventional rotorcraft may have little influence on “classical” ground resonance stability. The dynamics of the rotorcraft on its landing gear is generally established by the airframe properties and the landing gear properties under the

influence of the rotor system, with the “pylon” having little effect. For air or flight resonance, the rotor generally couples with the rigid body modes of the fuselage. For a specific design, a relatively simple analysis may be used to show the effect of the pylon mount system stiffness on air and ground resonance stability, and if not important, variations in the system may be omitted from the test program.

(3) The probable ranges of damping shall be established and investigated as prescribed and noted in paragraph (b) of § 29.663. An approved test proposal and test results report should be used for complying with § 29.663(b). For example, if a conventional wheel landing gear is used on the rotorcraft, the probable ranges of tire pressure or the lowest probable tire pressure should be stated in the test proposal and effects of the tire pressure investigated during the test. In addition, the effects of strut pressures should be investigated also. See paragraph AC 29.241, § 29.241, concerning tests and instrumentation of the test associated with complying with § 29.241. The instrumentation noted in paragraph AC 29.241 also applies to § 29.663(b).

(4) If the wheel landing gear is equipped with wheel brakes, the evaluation should include brakes “on” and “off.” The nose or tail wheel should be locked and unlocked if it swivels to evaluate any possible adverse effects of this feature.

AC 29.663A. § 29.663 (Amendment 29-30) GROUND RESONANCE PREVENTION MEANS.

a. Explanation. Amendment 29-30 clarifies that analysis as well as tests may be used to show freedom from ground resonance after malfunction or failure of a single means of ground resonance prevention. This amendment primarily clarifies that the probable range of damping should be established as well as investigated.

b. Procedures. The procedures of paragraph AC 29.663 continue to apply with the addition of the need to document the establishment of probable range of damping of ground resonance prevention means. Acceptable tire and oleo minimum and maximum pressures as well as other identified factors should be documented in maintenance instructions if necessary to assure the desired characteristics.

SUBPART D - DESIGN AND CONSTRUCTION

CONTROL SYSTEMS

AC 29.671. § 29.671 (Amendment 29-24) CONTROL SYSTEMS - GENERAL.

a. Explanation.

(1) The rule requires that controls operate easily and smoothly and provide positive response of the rotorcraft to control input.

(2) In addition, the rule requires that incorrect assembly be prevented by special design features or special markings.

(3) After Amendment 29-24, November 6, 1984, the rule requires that the flight control system be designed such that the full range of flight control authority can be verified by the pilot before flight. This check would normally have to be completed prior to turning the rotor since control extremes typically cannot be reached with the rotor operating on the ground.

b. Procedures.

(1) Easy, smooth operations of controls are substantiated by the operations tests of § 29.683 and the FAA/AUTHORITY flight testing under TIA procedures. Positive response of the rotorcraft to control inputs is also evaluated during company flight testing and FAA/AUTHORITY TIA flight testing to the requirements of §§ 29.141 through 29.175.

(2) To meet the requirement that incorrect assembly be prevented, the preferred method is providing design features which make incorrect assembly impossible. Typical design features which can be used are different lug thicknesses, different member lengths, or significantly different configurations for each system component. In the event that incorrect assembly is physically possible (because of other considerations), the rule may be met by the use of permanent, obvious, and simple markings. Permanent (durable) decals or stencils may be used.

(3) Design features of the control systems are checked when reviewing the type design drawings. During the proof and operation tests of §§ 29.681 and 29.683, the controls should be thoroughly reviewed for possible incorrect assembly and for any required markings supplied for compliance with this standard.

AC 29.672. § 29.672 (Amendment 29-24) STABILITY AUGMENTATION, AUTOMATIC, AND POWER-OPERATED SYSTEMS.

a. Explanation.

(1) This rule requires that the pilot be made aware of stability augmentation, automatic, or power-operated system failures which could lead to an unsafe condition. Examples of clearly distinguishable warnings include, but are not limited to, an obvious aircraft attitude change following the failure or an audio warning tone. A visual indication itself may not be adequate since detection of a visual warning would normally require special pilot attention. The use of devices such as stick pushers or shakers is not acceptable as a warning means. However, this rule is not intended to eliminate the use of such devices for other purposes. Examples of automatic control systems other than a stability augmentation system would be a pitch axis actuator used for the purpose of demonstrating compliance with longitudinal static stability requirements or a fly-by-wire elevator. The design of such systems must not interfere with completion of the control checks described in § 29.671(c). Further, for control systems where a series actuator malfunction could degrade control authority, a means should be provided to the pilot to determine actuator alignment (see § 29.1329(b)).

(2) The corrective flight control input following a system failure should be in the logical direction. For example, a malfunction resulting in a nosedown pitch of the aircraft should require a corrective cyclic control input in the aft direction. The system deactivating means does not have to be located on the primary flight control grips; however, it should be easily accessible to the pilot. Malfunctions and subsequent recoveries must be shown throughout the operating envelope of the aircraft. In a case where control authority is decreased following a malfunction, a reasonable flight envelope must be defined wherein compliance with controllability and maneuverability requirements can be demonstrated. This reduced flight envelope must be presented in the flight manual. Compliance with trim and stability characteristics is not required following a malfunction; however, a pilot workload assessment should be made to show that a mission can be safely continued to completion following the worst case single failure.

b. Procedures. A discussion of malfunction test procedures is presented in paragraph AC 29 Appendix B b(6). Controllability and maneuverability test procedures are addressed in paragraph AC 29.143.

AC 29.673. § 29.673 (Amendment 29-24) PRIMARY FLIGHT CONTROLS.

a. Explanation. This section basically defines primary flight controls as “those used by the pilot for immediate control of pitch, roll, yaw, and vertical motion of the rotorcraft.” This section clarifies the application of § 29.1555 which requires markings for controls other than “primary flight controls or control(s) whose function is obvious.”

b. Procedures. The primary flight controls (e.g., cyclic stick, collective, and tail rotor pitch control pedals) are excluded from the marking requirements of § 29.1555.

AC 29.674. § 29.674 (Amendment 29-30) INTERCONNECTED CONTROLS.

a. Explanation. A new § 29.674 is added by Amendment 29-30 which requires that the rotorcraft be capable of safe flight and landing after a malfunction, failure, or jam of any auxiliary interconnected control.

b. Procedures.

(1) Section 29.674 requires that the rotorcraft be shown to be capable of safe flight and landing after a malfunction, failure, or jam of an auxiliary control interconnected with a primary control. The section does not apply to interconnected primary controls; e.g., cyclic and collective controls.

(2) Examples of auxiliary controls covered by this section may include certain autopilot or stability augmentation or trim system components. Section 29.1309 methods may be used in determining failure effects of autopilot and stability augmentation system components.

(3) If an engine control could jam and result in a collective control jam, these controls should be designed to relieve that connection.

AC 29.675. § 29.675 (Amendment 29-17) STOPS.

a. Explanation.

(1) Stops are required to prevent unrestrained movements of pilot/autopilot inputs from causing interferences or overloads.

(2) The rule requires that the stop must not appreciably affect the control system range of travel due to wear, slackness, or take-up adjustments.

(3) Each stop is required to withstand loads corresponding to design conditions.

(4) In addition, each main rotor blade, if appropriate for the design, must have stops to limit its travel about its hinge points. For rotors with hingeless design, stops may be provided as appropriate to limit blade travel. Loads which may result from the blade hitting the stops (during starting or stopping the rotor, or during any large but allowable pilot control inputs such as autorotation cyclic traverse or when subjected to ground gusts, etc.) shall not overload the stops nor any rotor component.

b. Procedures.

(1) Stops are generally provided in the cockpit area and near any controllable surface end of the control system (i.e., main rotor hub, tail rotor hub, and stabilizer activators). For systems with control coupling or series actuators, stops have been

located further away from the cockpit to permit increased control output during malfunction (hardover) or extreme control position cases.

(2) Location of stops in close proximity to each end of a control system will allow the stops to function most efficiently without undue deflections between the stops and the adjacent surface or the adjacent cockpit control lever or pedals. The location of stops close to the control lever or surface will help meet the requirement that the stop and its function not be appreciably affected by wear, slackness, or take-up adjustments. Consideration should be given to limiting the total amount of take-up adjustments of both the stop and the control systems to preclude a hazardous adjustment of the control surface range of travel.

(3) Each stop is to be substantiated for critical design conditions from either pilot effort, aerodynamic loads, hydraulic loads, or other critical loads, as applicable. The stops can be substantiated for limit loads by the tests of § 29.681. (Deliberate misrigging of the controls on the test aircraft may be necessary to assure that the maximum limit load which the stop will be subjected to in service is applied to the stop during these tests.)

(4) The stops to limit the main rotor blade about its hinge points should be positioned to prevent the blades from striking any part of the structure, particularly during startup and shutdown operations. These stops should also limit the flapping of the static main rotor blades of the rotorcraft when they are subjected to ground gusts or rotor wash from nearby taxiing rotorcraft. Provisions should be made to prevent overloading the stops or the blade under conditions of ground gusts, rotor wash effects, or during autorotation landing flares. The need for provisions to prevent possible overloads due to ground gusts and close taxiing by adjacent rotorcraft and by autorotation landings can be determined using the instrumented flight load survey aircraft by hover-taxiing another rotorcraft near the instrumented aircraft and by conducting autorotation landing flares with the instrumented aircraft. Substantiation for the final main rotor flapping stop design can be demonstrated by similar tests.

(5) If features of design are added to the main rotor stop assembly which activate certain portions of the stop assembly only on the ground to meet the requirement that the blade not hit the droop stop during any operation other than starting and stopping the rotor, such features of design must be substantiated to reliably operate by both ground tests and flight tests, as appropriate. Wear and rigging tolerances should be considered in these demonstration tests.

AC 29.679. <u>§ 29.679 CONTROL SYSTEM LOCKS</u>.

a. <u>Explanation</u>.

(1) Whenever a control system lock or locks are used, the standard requires design features to prevent flight or limit operation before flight begins with the lock engaged. Locks are not required by the standard.

(2) After flight begins, design features shall be used when needed to prevent possible lock engagement while the rotorcraft is in flight or ground operation.

(3) The standard applies to external control locks as well as internal locks.

b. Procedures.

(1) Locks that release or disengage automatically, as stated, may be used. Attention should be directed to reviewing possible means of lock engagement while in flight. Fault analysis of the system should be used to ensure possible failures are determined. Design features may be used or needed to preclude this event.

(2) Manually applied and released locks may be used. Design features of the locks must prevent engagement in flight also.

(3) Any “unmistakable” warning to prevent takeoff with a lock engaged should be easily discernable during day and night operations. It should be possible to apply the lock only in such a manner that the required warning is provided. Color, location, shape (identification), and accessibility of the device or its control and legibility of any device placards or markings are important considerations in the evaluation.

(4) During a “compliance inspection,” and during TIA evaluations, the locks shall be evaluated to the standards. When a lock is not automatically disengaged, the operation of the rotorcraft should be limited. Unmistakable warning may be achieved as follows.

(i) Prevent sufficient power for takeoff.

(ii) The pilot shall be unable to move the collective control from the lowest pitch limit.

(iii) One or more aural devices that cannot be disengaged (turned off) until all locks are removed.

AC 29.681. § 29.681 LIMIT LOAD STATIC TESTS.

a. Explanation.

(1) The rule requires static tests of the control system in showing compliance with limit load requirements.

(2) The tests are specified to include each fitting, pulley, and bracket of the control system being tested and to include the “most severe loading.”

(3) Also, the rule requires that compliance with bearing factors (reference § 29.623) be shown by individual tests or by analyses for control system joints subject to motion.

b. Procedures.

(1) Compliance with the requirements of this rule is obtained by static tests conducted on either a static test airframe or on a prototype flying ship. In either case, conformity of the control system and related airframe is necessary to validate the tests.

(2) The rotor blades or aerodynamic surfaces may be used to react pilot effort loads through the control system or they may be replaced with fixtures. If fixtures are used, they should be evaluated for geometric and stiffness effects to assure test validity.

(3) The loads to be applied during the limit load static tests are specified in §§ 29.395, 29.397, and 29.399. The loads are applicable to collective, cyclic, yaw, and rotor blade control systems as well as any other flight control systems provided by the design.

(4) Section 29.585(e) specifies bearing factors for control system joints subject to angular motion. These factors are 3.33 for push-pull systems and 2.0 for cable systems for joints with plain bearings. For joints with ball or roller bearings, use the manufacturer's ratings.

AC 29.683. § 29.683 OPERATION TESTS.

a. Explanation. The rule requires that the control system be free from jamming, excessive friction, and excessive deflection. An operational test is required in which specified loads are applied at the pilot controls and carried through an operating control system.

b. Procedures.

(1) Compliance with the requirements of this rule is obtained by use of a test setup similar to that used for the limit load tests of § 29.681, except the load reactions at the blades (or surfaces) must allow for movement of the blades (or surfaces) as the system is operated through its operating range.

(2) Fixtures are normally affixed to the surfaces (or replace the surfaces) to allow pulley arrangements which provide for movement under load. These fixtures should be evaluated to assure that system loads up to limit will be applied during the full range of operations of each system.

(3) Each flight control system should be operated through its entire range under a light load and under limit load. As the controls are being operated, the system

should be checked for jamming, excessive friction, and excessive deflection. Excessive deflection includes deflection sufficient to contact other systems or structure. Also (in agreement with CAM 04.331/04.43.11), FAA/AUTHORITY policy has been to consider as excessive the deflection of a control system under limit load which exceeds approximately one-half of the system travel from neutral to an extreme stop. Floor panels, wall panels, and other access panels may have to be removed to permit visual checks of the entire control system. However, care should be taken when removing panels so that airframe structure is not weakened enough to deflect from its normal position when test loads are applied to the control system.

AC 29.685. § 29.685 (Amendment 29-12) CONTROL SYSTEM DETAILS.

a. Explanation. The rule requires that the control system be designed to prevent chafing, jamming, and interference from cargo, passengers, loose objects, or the freezing of moisture. Specifically, means are required in the cockpit to prevent the entry of foreign objects into places where they would jam the system, and means are required to prevent the slapping of cables or tubes against other parts. Specific design considerations to prevent binding and overloads within the control system are required such as--

(1) Assure pulley-cable combinations as specified in MIL-HDBK-5 are used unless inapplicable.

(2) Assure close fitting pulley guards are provided.

(3) Assure pulley-cable alignment sufficient to prevent excessive pulley flange loads is provided.

(4) Assure fairlead-cable alignment is within 3°.

(5) Assure no clevis pins are retained only by cotter pins.

(6) Assure turnbuckles do not bind other structures throughout the range of travel.

(7) Assure means for inspection of control system components are provided.

(8) Assure control system joints subject to angular motion incorporate special bearing factors, 3.33 for push-pull systems and 2.0 for cable systems.

(9) Assure that manufacturer’s ratings for ball or roller bearing ratings are not exceeded.

b. Procedures.

(1) The geometry of the control system components and installations is the primary control to prevent chafing, jamming, and interference. The control system from cockpit to surface should be checked for clearances both unloaded and loaded. The control system should be checked under load during both the limit load static tests (reference § 29.681) and the operational tests of § 29.683. Location of guides or fairleads and pulleys may be used in cable systems to prevent chafing and interference with other structure. Generally, tubes should clear adjacent structure by location and design geometrical considerations. If supplemental means are provided to assure the tubes do not chafe or interfere, the means should be evaluated for possible jamming.

(2) Rubber (or other elastomeric) boots connected to both the cockpit control arm or shaft and to the floor are acceptable means to prevent the entry of foreign objects into underfloor areas where they may cause jamming of controls. Control systems should, in general, be routed around cargo compartments. If routing of the control system components is in or near cargo areas, the control system components should be protected by bulkheads, panels, or other enclosures which have sufficient strength and stiffness to prevent possible interference with the control system components when subjected to cargo loading and handling deflections.

(3) Control system details should be reviewed for possible moisture collection. Areas should drain free. Exposed or open control areas should drain free, and areas of possible freezing moisture collection should not accumulate ice that would cause a jam of the controls. Simulated or actual ice collection on the controls may be used to prove questionable features. The areas to be considered for moisture collection include both external and internal areas where moisture may accumulate by direct impingement of water, entrapment of water particles, or condensation of moisture.

(4) The latest revisions of MIL-HDBK-5 do not explicitly give approved pulley-cable combinations, but appropriate MIL specifications are given in Chapter 8.3 for use in determining pulley-cable combinations and ratings.

(5) Provide ratings, factors, and alignment as specified.

(6) Provide inspection means as specified.

(7) Provide close fitting pulley guards as specified.

AC 29.687. <u>§ 29.687 SPRING DEVICES</u>.

a. <u>Explanation</u>.

(1) This standard for control systems assures that springs and spring devices used to prevent flutter, control oscillations, or vibrations are either --

(i) Reliable; or

(ii) The failure is not critical to the rotorcraft.

(2) Tests simulating service conditions are required in either instance.

b. Procedures.

(1) Springs and spring devices used in the control system, including balance springs, should be identified early in the certification program.

(2) If a spring cannot be shown by observation or analysis to be noncritical, then ground or flight tests may be required.

(3) Springs that are critical to safe operation may be subject to fatigue substantiation to prove they are reliable for the operating conditions imposed in service.

(4) Springs used in conjunction with hydraulic actuator spool valves may be subject to the standards of § 29.695.

AC 29.691. § 29.691 AUTOROTATION CONTROL MECHANISM.

a. Explanation.

(1) Rotorcraft designs generally have a main rotor blade collective pitch control system that does not have detents or other devices to limit pitch control in the control mid-range. Autogyro and other rotorcraft designs may include detents or other finite position control for collective pitch control. This rule requires that the control design allow rapid entry into autorotation after a power failure.

(2) Section 29.33 contains standards concerning establishment and control of the main rotor speed limits. The standard requires flight tests and demonstrations. The standard also concerns rotorcraft design features that are related to control of the main rotor speed limits. Paragraph AC 29.33, § 29.33, pertains to this standard.

(3) Other design requirements for control systems are contained in § 29.685.

b. Procedures.

(1) If high and low main rotor pitch stops are employed in the collective control and if the control may be rapidly moved from one limit to the other, compliance is shown.

(2) If detents or intermediate stops are employed, the pilot must be able to easily and readily override, disconnect, remove, or bypass the device to allow rapid autorotation entry prior to exceeding transient low speed rotor limits. An early assessment for design deficiencies may be accomplished by the flight test personnel with the evaluation completed in the Type Inspection Authorization (TIA) test program.

(3) It is acknowledged that modern rotorcraft designs may have an autorotation V_{NE} that is lower than power-on V_{NE} or normal cruise speed. For rotorcraft designs with this characteristic, the speed must be reduced after entry into autorotation. The rule also applies to rotorcraft designs with this characteristic and no relief from the rule is required since many phases of operation occur at speeds less than power-on V_{NE}. For example, a critical phase of flight occurs during takeoff. Rapid entry into autorotation is essential during this phase also.

(4) The features of the autorotation control mechanism and ability to control the rotor speed within the design limits for any rotorcraft will be evaluated as an integral part of the TIA test program.

AC 29.695. § 29.695 POWER BOOST AND POWER-OPERATED CONTROL SYSTEM.

a. Reference Regulations. The following sections of Part 29 are either incorporated in the provisions of § 29.695 or are otherwise applicable to power boost and power-operated control systems:

(1) Section 29.307 Proof of structure.

(2) Section 29.571 Fatigue evaluation of fight structure.

(3) Section 29.681 Limit load static tests.

(4) Section 29.685 Control system details.

(5) Section 29.861 Fire protection of structure, controls, and other parts.

(6) Section 29.863 Flammable fluid fire protection.

(7) Section 29.1301 Function and installation.

(8) Section 29.1309 Equipment, systems, and installations.

b. Explanation.

(1) The rule requires an alternate system if a power boost or power-operated control system is used.

(2) The alternate system must, in the event of any single failure in the power portion of the system, or in the event of failure of all engines:

(i) Be immediately available.

(ii) Allow continued safe flight and landing.

(3) The alternate system may be:

(i) A duplicate power portion of the system; or

(ii) A manually operated mechanical system.

(4) The power portion of the system includes:

(i) The power source (such as hydraulic pumps); and

(ii) Items such as valves, lines, and actuator.

(5) The failure of mechanical parts (such as piston rods and links) must be considered unless their failure is extremely improbable.

(6) The jamming of power cylinders must be considered unless their jamming is considered extremely improbable.

c. Procedures. It is assumed in the following discussion that the power boost or power-operated control system being utilized is a typical aircraft hydraulic system.

(1) The rule requires, without regard to the probability of failure, an alternate system for the power portion of the system. The power portion of the system, by example in the rule, includes hydraulic pumps, valves, lines, and actuators. It has also been interpreted to include seals, servo valves, and fittings.

(2) If a duplicate power portion of the system is used to meet the requirements of the rule, the requirements may be met by providing a dual independent hydraulic system, including the reservoirs, hydraulic pumps, regulators, connecting tubing, hoses, servo valves, servo-valve cylinder, and power actuator housings. There must be no commonality in fluid-carrying components. A break in one system should not result in fluid loss in the remaining system.

(3) Dual actuators should be designed to assure that any single failure in the duplicated portion of the system, such as a cracked housing, broken interconnecting input, or broken interconnecting output link, does not result in loss of total hydraulic system function.

(4) A manually operated mechanical system may be used as the alternate system to a single hydraulic system if, after the loss of the single hydraulic system, the pilot can control the rotorcraft without undue mental or physical fatigue in any normal maneuver for a period of time as long as that required to effect a safe landing.

(5) The substantiation of the various system components should include consideration for operation in the normal and alternate system modes.

(6) The “extremely improbable” criteria noted in § 29.695(c) for failure of mechanical parts may be satisfied by performing component fatigue testing and establishing a service life through this technique.

(7) Fatigue substantiation of the control actuator is required under § 29.571 and should consider both the stresses imposed by flight loads and the stresses imposed by hydraulic pump pressure pulses. Flight loads factored in a suitably conservative manner may be an acceptable means to take into account both effects.

(8) The possibility of jamming of the power cylinder may be shown as “extremely remote” through a failure analysis that considers every possible system component failure such as, but not limited to, ruptured lines, pump failure, regulator failure, ruptured seals, clogged filters, jammed servo valves, broken interconnecting servo valve inputs, broken interconnecting output links, etc.

(9) Three acceptable means to meet the requirements of § 29.695(a)(2) could be as follows:

(i) Provide two transmission-driven hydraulic pumps, provided the pumps are driven by the transmission during all flight conditions including autorotation.

(ii) Use two electrically driven hydraulic pumps if electrical power is available to drive the pumps with all engines failed. If this approach is used, the battery must be capable of running both pumps plus all other required equipment necessary for continued safe flight.

(iii) Use a single transmission driven pump and an electrically driven pump.

SUBPART D - DESIGN AND CONSTRUCTION

LANDING GEAR

AC 29.723. § 29.723 SHOCK ABSORPTION TESTS.

a. Explanation.

(1) Limit and "reserve energy" drop tests are required as prescribed in §§ 29.725 and 29.727, respectively. These tests must be conducted on the complete rotorcraft or on units consisting of wheel, tire, and shock absorber in their proper relation. For rotorcraft with skid landing gear, the tests may be conducted on the complete rotorcraft or on a simulated fuselage with the complete skid landing gear system.

(2) The rotorcraft must be designed to limit load factors that equal or exceed the limit load factor substantiated by these drop tests. In practical application, the rotorcraft may be designed to a limit load factor, such as 2.8 g. Thus, it is necessary that the limit landing load factor derived from the landing gear drop tests be equal to or less than 2.8 g. If not, the rotorcraft must be redesigned for the higher load factor derived from the drop tests. It must be shown in accordance with § 29.723 that the limit load factors selected for design under § 29.473 will not be exceeded in landings with the limit descent velocity corresponding to the drop height specified in that section. In addition, reserve energy absorption capacity of the landing gear must be shown for a descent velocity of 1.22 times the limit descent velocity selected under § 29.473 by increasing the drop height to 1.5 times the "limit" drop height. The test requirements or procedures outlined in FAR 29 for obtaining the landing load factors are empirical; however, these procedures are based on and supported by satisfactory experience.

(3) As stated in § 29.725(c), each landing gear unit should be tested in the attitude simulating the landing condition that is most critical from the standpoint of the energy to be absorbed by it.

(i) For wheel landing gear designs, the level landing or tail down landing and level landing with drag are generally the most critical attitude. A test of more than one attitude is generally required to comply with the standard. The landing attitudes or conditions prescribed are level (vertical loads), inclined (loads at 14.5° aft from the vertical axis), level with wheel spin-up and tail down. These attitudes are specified in §§ 29.479(b)(1), (2), and (3) and 29.481.

(ii) For skid landing gear designs, the level landing and level landing with drag are generally the most critical attitudes. These attitudes are specified in § 29.501(b) and (c).

(4) Drop tests are required. If analytical methods and/or means are proposed by the applicant, the data presented for approval must be equal to or conservative with

respect to that data obtained from physical drop tests. Section 21.21(b)(1) of FAR 21 concerns “equivalency” determinations. Presenting an acceptable means of “equivalency” here would circumvent the necessary scrutiny of an analytical method or means and is also beyond the scope of this document.

b. Procedures. The test plan or proposal must be approved prior to official FAA/AUTHORITY tests unless satisfactory resolution of outstanding proposal or conformity inspection items can be accomplished after the test.

(1) The following headings would be a typical table of contents for the test proposal, and a generalized explanation of the contents that may be included under each of these headings for a wheel landing gear follows.

(i) Purpose. The regulations to which compliance is being shown by the drop tests should be identified (usually §§ 29.723, 29.725, and 29.727). Also, the rotorcraft landing gear including the wheels and tires to be dropped, should be positively identified in the report by the manufacturer’s or applicant’s previously FAA/AUTHORITY approved drawing, technical standard orders (TSO’s), or other identifying FAA/AUTHORITY approved data as applicable.

(ii) Description of test setup. This section should present a description of the test fuselage or jig, method of attaching landing gear to jig, and type of accelerometer to be used to measure load factors. Proof of calibration of accelerometer should be available. The accelerometer should be mounted at the aircraft CG if a free drop of the aircraft is used, or as close as practical to the centerline of the main shock absorbing component of each landing gear (oleo strut, etc.) if each gear is tested separately. The description of the test jig, including platforms on which the gears are to be dropped, should be defined by sketches in addition to the required mathematical calculations. This data should show that the landing gear will be at the proper attitude, relative to the platform, on impact for the particular landing condition. Drawings or other approved data from which the geometry is taken should be referenced in the proposal. The tire and oleo pressures at the time of the test should be specified. The method of measuring the deflection of the tire plus the vertical travel of the axle under impact should be described. This measurement may be accomplished by telescoping tubes attached to the point on the jig that would measure the total (tire and oleo) vertical deflection of the landing gear. Other vertical and horizontal deflections should be measured as required to determine if the landing gear has experienced permanent deformation after each drop test. The effect of surface roughness should be considered. Smooth surfaces tend to give maximum deflections where rough surfaces tend to restrict deflection and to result in maximum values of N_Z. Preliminary company drop tests (at less than limit drop height) may be used to determine the critical surface roughness, or engineering evaluations may be used (without tests) when the gear configurations are such that the critical surface condition can be analytically determined (or when the load factor is shown to be negligibly affected by surface roughness). NACA Report 1154, dated 1953, contains information that surface coefficients of friction may vary from 0.4 to 0.7. Skid landing gear

standards, § 29.501(c), indicate an acceptable coefficient of friction is 0.5. A wheel landing gear design standard, § 29.479(b), indicates an acceptable coefficient of friction is 0.25. In the case of a small rotorcraft, the entire aircraft may be dropped. This may be accomplished by establishing pivot points at the main gear axles for the tail (or a point forward of the nose gear) drops, and a pivot point at the tail (or nose gear) axle for the main gear drops. It is the responsibility of the applicant to distribute the aircraft inertia items, including added weight to get the proper effective drop weight (W_e) at the landing gear, so that no local failures of the aircraft occur as a result of the limit or reserve energy drop tests.

(iii) Test data. Computations for the required drop height (h) and the effective drop weight (W_e) should be shown for each design level landing and tail down landing condition in compliance with §§ 29.479 and 29.481. The computations should be in accordance with § 29.725(a) for h and § 29.725(b) for W_e for the limit drop tests. W_e and h are computed in accordance with § 29.725 for the limit drop test and with § 29.727 for reserve energy drop test. The computation of the static weight on the gear being dropped (W_M, W_N, or W_T) and used in the computation of W_e should be shown. This static weight is defined as W_M, W_T, or W_N for the main gears, tail gear, or nose gear, respectively, in § 29.725(d). It should be shown that the critical CG and proposed certificated maximum landing weight have been used in the computation of W_M, W_T, or W_N. The computation of the slope of the platforms required for the inclined reaction conditions should be presented also.

NOTE: Effective drop weight (W_E) is used only for free drops. It provides a technique for accounting for rotor lift without applying lift during the test. If rotor lift is applied during the drop tests, actual weights (W_M, W_T, or W_N) will be used, not effective weights, W_E.

(iv) Test results. The results of the test are based on the values of W_E, h, d, W, and L used and obtained for each drop test and the value of Nj obtained from the accelerometer. These results should be summarized, and the method of computing the aircraft limit inertia load factor should be shown for each drop in accordance with § 29.725(d). A print or copy of the film or other recording trace from the accelerometer, if not a direct readout type of accelerometer, should be included in the test results. Each critical condition should have several preliminary drops as many times as required to obtain reasonable correlation.

(2) Skid landing gear may be tested using similar procedures except a level landing attitude drop test is all that is required by § 29.501. The design load conditions specified in § 29.501(c) through 29.501(f) are derived from this level drop test condition.

(i) Section 29.501, paragraphs (a)(2) and (3), contain special considerations for skid landing gear.

(ii) Section 29.501(a)(2) specifies that structural yielding of elastic spring members under limit load is acceptable. This yielding or deformation is a means of

absorbing the landing impact. For skid landing gear that use oleo or other types of shock absorbers, the standard does not allow structural yielding under limit load. During the limit load and reserve energy (ultimate for skid landing gear with elastic spring numbers) drops, the yielding energy absorbing members will probably deform or yield. After a limit drop test, the gear may be used for a reserve energy drop at the discretion of the applicant but a gear that has been subjected to a reserve energy drop should not be used unless it can be shown that no yielding has occurred in that gear.

(3) Wheel landing gear is tested in attitudes prescribed in paragraph a(3)(i) above. Each unit, nose or main gear, is generally tested separately.

(4) Skid landing gear is tested in attitudes prescribed in subparagraph a(3)(ii) above. Due to the construction of skid landing gear, the complete skid landing gear is tested as a unit. Thus, the level landing with drag condition is probably the critical attitude for the forward cross-tube and its attachments. The level landing condition is probably the critical attitude for the aft cross-tube and its attachments.

(5) An FAA/AUTHORITY or FAA/AUTHORITY designated or delegated person need only witness the drop tests for “record” or “compliance.” Preliminary or developmental drops do not require an FAA/AUTHORITY witness.

AC 29.725. § 29.725 (Amendment 29-3) LIMIT DROP TEST.

a. Explanation. Limit drop tests, in the critical aircraft attitude or critical attitude of each gear, are required for the landing gear. The drop height must be at least 8 inches, which equates to 393 feet per minute (free fall) vertical descent speed. Rotor lift may be simulated and an effective mass may be used in the drop test as prescribed.

b. Procedures. See paragraph AC 29.723, § 29.723.

AC 29.727. § 29.727 RESERVE ENERGY ABSORPTION DROP TEST.

a. Explanation.

(1) In addition to the limit drop tests, a reserve energy drop test is required. The landing gear must not collapse in this test to the extent that the fuselage impacts the ground. Fracture (to separation) of landing gear parts is considered collapse of the landing gear. This test is not an ultimate load drop test for the landing gear, except as specified in § 29.501(a)(3) for certain skid landing gear designs using elastic spring members.

(2) All other types of landing gear must be substantiated for design ultimate loads in addition to this reserve energy drop test.

(3) Shock absorbing devices, such as oleos, must not “bottom” during the reserve energy drop test. “Bottoming” occurs when displacement of the device no longer occurs with increasing load.

(4) Requirements for proof of the landing gear and airframe structure are found in §§ 29.305, 29.307, and 29.473.

b. Procedures. See paragraph AC 29.723, § 29.723.

AC 29.727A. § 29.727 (Amendment 29-30) RESERVE ENERGY ABSORPTION DROP TEST.

a. Explanation. Amendment 29-30 defines the word “collapse” as used in § 29.727(c). Collapse of the landing gear during reserve energy absorption drop tests occurs when:

(1) A member of the landing gear will not support the rotorcraft in the proper attitude; or,

(2) A member deforms sufficiently to allow the rotorcraft structure other than the landing gear and external accessories to impact the landing surface.

b. Procedures. The procedures of paragraph AC 29.727 continue to apply with the following supplemental guidance.

(1) The proper attitude for the rotorcraft after the reserve energy absorption drop test is an attitude which allows for permanent deformation of landing gear elements but provides for adequate egress from the rotorcraft.

(2) External accessories that may not impact the landing surface during drop testing include devices such as externally mounted fuel tanks or accessories likely to cause post-landing fires. Cameras, loudspeakers, and search lights may be damaged during deformations resulting from reserve energy drop tests if electrical connections are sufficiently protected to preclude electrical fires and the devices are not likely to penetrate fuel tanks. The expendable accessories, if installed, should also be designed to not have “hard points” that would unacceptably damage the rotorcraft structure under landing impacts by penetration into the occupied areas or fuel tanks. These expendable accessories should be designed with frangible fittings, frangible devices, or comparable design features. Also, these devices should be designed to not significantly alter the energy absorbing ability or design features of the landing gear.

AC 29.729. § 29.729 (Amendment 29-24) RETRACTING MECHANISM, LANDING GEAR.

a. Explanation.

(1) Structural substantiation is required for the gear, retracting mechanism, doors, gear supporting structure for landing loads, maneuvering, gusts, and yawing flight condition loads.

(2) An emergency means to extend the gear after failure of the retraction/extension system is required for all except solely manual mechanical systems.

(3) This regulation requires an indication to the pilot when the gear is secured in the extreme positions. This rule does not apply to rotorcraft with fixed gear. The rule also applies to amphibious rotorcraft with retractable gear.

(4) A landing gear down-lock is required. An optional up-lock may be used if it meets reliability requirements.

(5) A (ground) operation test must be conducted to ensure proper functioning of the system.

(6) Location and operation of the control lever or device must comply with § 29.777. This section includes identification of controls to prevent confusion and inadvertent operation. Sections 25.779 and 25.781 of FAR Part 25 contain large airplane design requirements for motion, effect, and shape of cockpit controls and their knobs and should be consulted for further guidance.

b. Procedures.

(1) The design load factors and resulting loads should be derived from the design data. The landing gear, while retracted, operating, and extended, and its supporting structure should be substantiated for the critical aerodynamic and inertia loads. Yawed conditions should be considered. The specific conditions are noted in paragraphs (a)(1), (2), and (3) of § 29.729.

(2) Wheel well doors, if installed, should be designed for the aerodynamic loads, including loads from yawing conditions (angles proven under § 29.351) for airspeeds up to the design maximum landing gear extended speed. Aerodynamic effects on both open and closed doors must be considered in the door and door support substantiations. The applicant may choose to substantiate the rotorcraft for a “landing gear operating” and “extended” speed V_{LO} and V_{LE}, respectively, that is equal to the rotorcraft V_{NE}. This option will alleviate an airspeed “structural limitation” because of the landing gear design substantiation. Any airspeed “structural limitation” should be listed in the structural limitations part of the TIA.

(3) The required “down-lock” should be checked during the operation test. The design drawing should be reviewed for compliance prior to conducting an operation test. The “down-lock” system should be evaluated for § 29.1309 function and reliability requirements.

(4) If an optional “up-lock” is installed (including hydraulic locking), the landing gear should be extended during the operation test after simulation of critical failure mode of the retraction system (reference § 29.1309).

(5) An “operation” test plan or proposal submitted for compliance with § 29.729(d) should include the items noted in the two previous subparagraphs and should include a functional check of the position indicator system. Those tests must be satisfactorily completed before issuing the TIA.

(6) During the official FAA/AUTHORITY flight tests, compliance with the emergency operation, position indicator, and control aspect of § 29.729(c), (e), and (f), respectively, will be verified or accomplished. In addition, the F and R test program plan (§ 21.35) will specify certain tests or evaluations for the retraction system.

(7) Position Indicator Evaluation.

(i) When evaluating the position indicator system, emphasis should be placed on the switches and their installations, and on the cockpit presentation. Each gear must have its own set of switches to indicate when it is secured in its extreme “up” position and its extreme “down” position. The switches must be located to give a valid indication of the arrival of the gear at its extreme position.

(ii) The reliability and environmental qualifications of the switches to be used should be carefully considered. An example of a condition that has potential for trouble is operation on wet areas. Trouble starts when water is picked up by the tires and deposited on the switches. During winter months the water can freeze, and the resulting ice may prevent the switch from functioning properly.

(iii) An acceptable cockpit presentation consists of two lights for each gear. One light is colored “green” and indicates when its gear is secured in the extreme “down” position. The other light is colored “amber” or “red” and indicates when its gear is in transit. When the gear is in either extreme position, the in transit light is “out.” For this presentation, the indication to the pilot that the gear is in the extreme “up” position is an all-gear, lights-out condition.

(iv) Some manufacturers have also included a warning system to alert the crew if the landing gear has not been extended prior to landing. If a warning system is presented, §§ 29.1301 and 29.1309 should be used to evaluate its functional characteristics and the impact of its failure modes.

AC 29.731. <u>§ 29.731 WHEELS</u>.

a. <u>Explanation</u>. This standard requires use of approved wheels, either approved under TSO-C26 or a later revision or approved under the type certificate for the aircraft. Wheels must satisfy both a design static (1g) load and design limit landing or taxiing

load determined under the applicable ground load requirements. Standards for a tire installed on a wheel are contained in § 29.733.

b. Procedures.

(1) The structural design loads data shall contain both a static load and a landing and taxiing load for each wheel. These loads are determined by virtue of compliance with the standards of § 29.731(b) and (c). The ratings of the wheel shall not be exceeded. TSO-C26c contains minimum performance standards for TSO approval of aircraft wheels and wheel-brake assemblies. Ratings are assigned in accordance with this performance standard.

(2) If a wheel selected for an aircraft design has TSO approval, the wheel manufacturer will supply the rating to the aircraft manufacturer. Each wheel shall be marked as prescribed which includes a listing of the TSO number. Even though a wheel is TSO approved, the application on the aircraft (loads imposed on the wheel) requires proof that the rating is not exceeded.

(3) If a wheel selected for an aircraft design is not approved under a TSO, the necessary data, both detail design and assembly drawings and qualification tests and test report data, will be required to comply with the standards contained in Part 29. Design control and inspections will be accomplished as a part of the aircraft type design. Structural substantiation and any appropriate qualification tests shall be accomplished. See §§ 29.471 through 29.497 and § 29.511 for the ground load conditions.

(4) The Tire and Rim Association, Inc., generally issues a yearbook listing tire and rim sizes and ratings. The dimensions and contours for aircraft wheel rims are contained in Section 9 of this yearbook.

AC 29.733. § 29.733 (Amendment 29-12) TIRES.

a. Explanation.

(1) This standard specifies both design and performance criteria for tires. The tire must fit the wheel rim. The maximum static ground reaction for the condition specified must not exceed the maximum static load rating of each tire. In addition, any tire of retractable gear systems must have adequate clearance from surrounding structure and systems as specified.

(2) Main, nose, and tail wheel tires must comply.

(3) Rotorcraft design maximum weight shall be used. Static and “dynamic” conditions are specified for rotorcraft tires.

(4) Tire performance standards are contained in TSO-C62c.

b. Procedures.

(1) The aircraft structural design loads should contain a maximum static load imposed on the tires. The load is derived for a static ground reaction assuming the design (maximum) weight and the critical center of gravity for each tire of the landing gear. The wheel loads are determined under § 29.731(b). Reduced weight but forward CG conditions may result in the highest static load on a nose wheel tire. Thus, combinations of weight and CG locations require investigation for the maximum tire load of each main, nose, and tail wheel tire. Nose wheel tires are subject to a specific dynamic condition.

(2) The maximum possible size of the tires considering appropriate temperatures, aging, and pressure should be obtained to check wheel well and cover clearances. Tire dimensions (for clearances) may be found in the yearbook noted in paragraph AC 29.733b(4). If the tire clearance is questionable, objects may be taped to the tire to simulate tire growth or oversize dimensions expected and the wheel retracted and rotated by hand to check for possible interferences. Minimum clearance, such as one-half inch, may be adequate as a design objective. The design drawings should be reviewed for information of correct systems installations and landing gear rigging within the wheel wells and wheel covers, if installed. If necessary to control tire sizes, specific manufacturer's tires should be used as "required equipment" and the tire manufacturer and the part number should be specified in the design data and on the type certificate data sheet as "required equipment."

(3) As specified in § 29.729(d), an operation test of any retractable landing gear should be performed. During this operation test, the tire clearances should be determined and recorded for the maximum tire size expected in service. Only the least or minimal clearance found, if adequate, should be recorded.

(4) The Tire and Rim Association, Inc., generally issues a yearbook listing tire and wheel rim sizes and ratings. This information is advisory as stated in the yearbook. Section 9 concerns aircraft tires and rims. Table AP-5 in Section 9 of the yearbook concerns tires used on rotorcraft. The tire may be selected initially from the yearbook, but qualification data for the specific tires used shall be furnished with the type design data in compliance with the standards. Section 9 also contains tire size and tire growth dimensions.

(5) Minimum performance standards for aircraft tires, excluding tail wheel tires are found in TSO-C62c, Aircraft Tires. Tires meeting the TSO are marked as prescribed in the standards. The load rating (reference § 29.733) is marked on the tire. TSO tires are not required but should be used whenever possible. The manufacturer's information, such as load rating, should be included in the aircraft type design structural substantiation data.

AC 29.735. § 29.735 (Amendment 29-24) BRAKES.

a. Explanation.

(1) Brakes are required for wheel landing gear aircraft. Minimum performance standards are contained in this section. During the course of the FAA/AUTHORITY flight test program and of any F&R program conducted under § 21.35, the brakes shall be used and evaluated.

(2) Design criteria are contained in this standard.

(i) The braking device must be controllable by the pilot. It is optional for the second pilot station except as may be specified under the provisions of § 29.771.

(ii) The braking device must be usable during power-off landings.

(3) Performance criteria are also contained in this standard.

(i) The brakes must be adequate to counteract any normal unbalanced torque when starting or stopping the rotor or rotors.

(ii) The brakes must be adequate to hold the rotorcraft parked on a 10° slope on dry, smooth pavement.

(4) In §§ 29.493(b)(2) and 29.497(g)(2)(ii), limiting brake torque is one ground load standard for design of the landing gear.

(5) Although not specifically noted in a standard, the position of the brake on the wheel is important. The brake should be positioned to avoid ground contact whenever the tire is deflated.

(6) TSO-C26c contains minimum performance standards for aircraft landing wheels and wheel-brake assemblies. For rotorcraft, a wheel-brake assembly design rating is established by the manufacturer. The TSO standard for rotorcraft brakes specifies a 20° slope standard (rather than a 10° slope) for an over-pressure hydraulic brake test.

(7) The brake application device at the pilot station is subject to other structure strength standards in this Part, such as the limit pilot forces or torque specified in § 29.397.

b. Procedures.

(1) Wheel-brake assemblies approved under TSO-C26 or a later revision will have various (rotorcraft) ratings as specified in the standard. One rating of TSO standard for a rotorcraft wheel-brake assembly is the kinetic energy capacity in

foot-pounds at the design landing rate of absorption. The design takeoff and landing weight and rotorcraft speed in knots for brake application are a part of the equation. The brake manufacturer should furnish this rating and the two noted parameters for the selected design or designs. The ratings of selected brakes should be included in a structural design data report such as a design criteria report. The use or application of each brake design on the particular rotorcraft design should not exceed capacity of the brake or the ratings established under the TSO. If appropriate, the part number and manufacturer of each brake may be listed in the structural data reports as well as listed in the type design drawings.

(2) The limiting brake torque obtained from the brake manufacturer should be used in complying with §§ 29.493(b)(2) and 29.497(g)(2)(ii).

(3) Compliance with the brake standards should be confirmed, demonstrated, and recorded as a part of the flight test type inspection report. This applies to TSO brakes and to brakes approved as a part of the aircraft type design.

(4) If found necessary under the provisions of § 29.771, the second pilot station should have brake control devices. The brake control devices should be listed with the other required equipment that defines the equipment necessary for a second pilot station.

(5) A brake assembly may be evaluated and approved under Part 29 as a part of the aircraft type design. TSO-approved brakes are not specifically required but are recommended. For non-TSO-approved brakes, all detail and assembly drawings, required test proposals, and test results reports may be submitted and processed as a unique part of the particular aircraft type design.

(6) During an inspection of the landing gear, such as an engineering compliance inspection, the brake location should be checked to ensure the brake does not contact the ground when the tire is deflated. Type design drawings should control the proper location of the brake on the landing gear.

AC 29.737. <u>§ 29.737 SKIS</u>.

a. <u>Explanation</u>. This standard is, in part, derived from small airplane standards. Aircraft skis approved under TSO-C28 may be used on rotorcraft. TSO-C28 for aircraft skis refers to Sections 4 and 5 of National Aircraft Standards Specification 808, dated December 15, 1951, for strength and performance standards. The standard also addresses flight/aerodynamic loads.

(1) A maximum limit load rating is assigned to each ski approved under TSO-C28.

(2) This limit load rating must not be exceeded by the maximum limit ground load determined under the standards of § 29.505, Ski landing conditions.

(3) The ski installation is also subject to the maximum aerodynamic and inertia loads and to the ground rotation or torque load per § 29.505(c).

(4) Ski mounting or installation parts used in the particular application are subject to substantiation as any landing gear member is subject to substantiation.

(5) Ski installations are also subject to flight and ground operation evaluations.

(6) Pads or “bear paws” on skid or wheel landing gears for use in snow or soft soils are unique to rotorcraft. These shall be approved also. For new type certificate applications after November 27, 1989, § 29.571, Amendment 29-28 requires fatigue substantiation of the landing gear. The effect of pads, etc., shall be evaluated in compliance with the standard.

b. Procedures.

(1) The limit load rating for the ski selected shall be obtained from the ski manufacturer. This information shall be included in the design criteria and/or structural substantiation reports. The type design drawings will include the appropriate part number for the TSO-approved product and the necessary installation information.

(2) The design limit loads derived in compliance with § 29.505 shall not exceed the ski limit load rating. The skis shall be substantiated for the torque load in § 29.505(c) since the TSO standard does not contain a similar requirement.

(3) Skis that are not TSO approved may be approved as a part of the aircraft type design by complying with the strength and performance standards contained in TSO-C28 (NAS 808).

(4) The aerodynamic loads shall be based on a limit load design speed of 1.11 V_{NE}. The maximum V_{NE} used in design may be reduced only for a “ski configuration” airspeed limitation.

(5) Pads or “bear paws” installed on skid or wheel landing gear to facilitate operations in snow conditions or marsh lands may be approved as a part of or as an alteration to the aircraft type design. Rational flight and landing design loads applicable to the particular pad design must be developed and strength substantiating data submitted proving compliance with the strength and performance standards contained in Part 29. In addition, skid landing gear may be subject to excessive vibratory loads while in flight whenever the weight and mass distribution is altered by adding “bear paws.” The effect of additional weight should be investigated over the flight operating regimes, including the approved range of rotor speeds. Resonant vibratory conditions should be avoided or highly damped, thus avoiding a potential change in service life. In compliance with § 29.571, Amendment 29-28, stress measurement, etc., may be necessary, if the standard is applicable.

SUBPART D - DESIGN AND CONSTRUCTION

FLOATS AND HULLS.

AC 29.751. § 29.751 (Amendment 29-3) MAIN FLOAT BUOYANCY.

a. Explanation.

(1) This section specifies standards for single and multiple float buoyancy in fresh water. The standard does not apply to ditching/emergency flotation devices, but to amphibian rotorcraft devices.

(2) It is a design and a performance standard. Rigid or inflatable floats may be used. Enough water tight compartments (per Amendment 29-3) rather than a specific number are required to minimize the probability of capsizing when one compartment is flooded or deflated.

b. Procedures.

(1) Excess buoyancy. A minimum of 50 or 60 percent in excess of the maximum certificated weight of the rotorcraft is required for single or multiple floats, respectively. The weight of fresh water (density 62.42 pounds per cu. ft.) displaced by fully submerged float or floats (total volume of each float at operating pressure is used) should be a minimum of 50 or 60 percent greater than the maximum certificated weight of the rotorcraft.

(2) Capsizing.

(i) Each float should have enough sealed, separate and approximately equal volume compartments to minimize the probability of capsizing when the critical compartment is flooded or deflated. Five or more compartments in each float are usually necessary to meet the standard. Ten compartments per float have been employed in certain designs.

(ii) An analysis or test or combination thereof may be used, if necessary, to prove a positive margin of stability with the most “critical” compartment in one float flooded or deflated.

(iii) The location of the floats, and the most critical compartment, the rotorcraft weight, mass moment of inertia, and center of gravity location are also important considerations for capsize stability.

AC 29.753. § 29.753 MAIN FLOAT DESIGN.

a. Explanation.

(1) Strength or design load standards are encompassed in the standard for inflatable bag and rigid floats. Bag pressure loads are included. The standard applies to an amphibious rotorcraft.

(2) The float landing loads are derived from the drop test of the float landing gear, or the load may be derived from tests of the wheel (or skid) landing gear (reference § 29.521). Bag type floats are not subject to the side loads according to the standard. Rigid floats, whether single or dual, are subject to the side load in each direction.

(3) Inflatable bag type floats should also be designed for the maximum pressure differential developed for the maximum operating altitude difference requested. That is, the resulting pressure difference between an operational altitude and a take-off site elevation should be established, and proven and may become an operating limitation.

(4) Landing loads suffice for the aerodynamic loads for typical rotorcraft float designs. Nonetheless, design and/or support of the forward part of bag type floats should be evaluated for maximum design speeds to prevent collapse or significant distortion of the bag while in flight.

(5) Resistance to puncture and abrasion at attach/wear points is not in the standard but is an important design consideration. “Girt” or attachment design loads shall be sufficient to withstand the loads imposed by the standards.

(6) The water or sea conditions (wave heights) evaluated in §§ 29.231 and 29.239 tests are not limitations but should be noted in the procedures section of the flight manual.

(7) The standard does not apply to ditching/emergency floatation devices.

b. Procedures.

(1) Landing load factor.

(i) A drop test of the float landing gear may be conducted to obtain the limit landing load factor (reference § 29.725). Level landing attitude should be used for the float assembly.

(ii) The limit load factor for wheel or skid landing gear may be used (reference § 29.521) for the floats.

(iii) The float design ultimate load factor is 1.5 multiplied by the limit load factor.

(2) Flight aerodynamic loads--bag type floats.

(i) Evaluate collapse or significant distortion of bag type floats for speeds up to V_D (1.11 V_{NE}) with the minimum operating bag pressure.

(ii) External tubes to support the bag may be employed.

NOTE: Design landing loads may exceed the flight loads.

(3) Altitude differential loads.

(i) Bag type floats should not rupture due to the change in absolute pressure from take-off to the operating altitude. The applicant should select and prove the maximum operating altitude differential desired. A 5,000 to 8,000 feet operating differential may be a sufficient limitation. That is the rotorcraft with bags properly inflated could not operate more than 5,000 to 8,000 feet above the take-off site elevation.

(ii) A proof and ultimate pressure test should be conducted for the design. If operating or inflation pressure is 2.62 PSI (including a tolerance) and 5,000 feet (pressure) differential is desired (use sea level to 5,000 feet pressures), the proof or limit pressure should be 2.62 + 2.47 = 5.09 PSI. The pressure relief valves may be set at this value also. The change in size during inflation should be recorded. Significant changes may adversely affect flight characteristics and should be evaluated. The ultimate or burst free pressure should be proof pressure (5.09 PSI) multiplied by 1.5 or 7.635 PSI. A video or photographic record may be used as a reference of the change in size or shape for this test.

(iii) Each compartment should be equipped with a pressure relief valve to further protect the bag from excessive internal pressure.

(iv) At least one float should be subjected to a burst pressure test. Record the gauge pressure of burst.

(4) Landing loads.

(i) Rigid float vertical and a combined vertical and aft load conditions. A vertical or up-load only and a vertical combined with an aft load component for a resulting vector angle of 14.03° from the vertical axis of the rotorcraft shall be used. Reference § 29.521(a). The resulting design load is the same load in both cases.

(ii) Rigid float side and vertical load condition. For each rigid float, whether single or dual, a vertical load combined with a side load resulting in a vector angle of 26.6° from the vertical axis of the rotorcraft shall be used. The side load is applied to each float individually. Both inward and outward acting side load conditions shall be substantiated separately for the design of dual floats.

(iii) Load distribution on rigid floats shall be appropriate for the critical conditions. ANC-3 or § 25.533 and FAR Part 25, Appendix B may be useful.

(iv) Bag type float. The loads and the distribution of the loads are rather simple according to the standards. Only vertical loads and vertical with aft (drag) component are specified in the standard. These shall be distributed along the length over 75 percent of the projected area of the bag. Side loads are not required.

(5) Operating limitations.

(i) V_{NE} with floats installed is typically lower than the V_{NE} for wheel or skid landing gear rotorcraft configurations.

(ii) Bag inflation pressure shall be placarded or stenciled near inflation fittings.

(iii) The operating attitude differential proven for bag floats shall be an operating limitation. In addition, the flight manual should caution pilots about the effect of a significant decrease in altitude from the take off level which causes or reduces pressure in the bag. Placards may be employed as well.

(iv) Flight test results may dictate a further reduction in V_{NE} or changes in other operating limitations.

AC 29.755. § 29.755 (Amendment 29-30) HULL BUOYANCY.

a. Explanation.

(1) This section contains performance standards for an integral fuselage hull and auxiliary (such as outrigger) floats. Water-based, amphibian and limited amphibian rotorcraft were encompassed in the standard.

(2) Amendment 29-3 added but Amendment 29-30 removed paragraph (b) which concerned Limited Amphibian Rotorcraft. Rotorcraft of that type used a “boat type hull” which is not desirable now and are certificated to the standards of § 29.801, Ditching, and § 29.563, Structural ditching provisions. (Limited amphibian rotorcraft were converted to the ditching configuration.)

(3) The worst combination of wave height and surface winds selected by the applicant shall be used in compliance with the standard.

b. Procedures.

(1) Capsizing.

(i) The hull and auxiliary floats shall have enough sealed compartments to allow failure of the critical, single, compartment in either the hull or auxiliary float and minimize the probability of capsizing.

(ii) Location of the most critical compartment (whether hull, sponson, or auxiliary), rotorcraft weight, mass moment of inertia, and CG location are also important considerations to prove stability or not capsizing.

(iii) The lightweight rotorcraft configuration and wind and wave condition should be considered, as well as the heavy weight configuration.

(iv) The sea state (worst combination of wave height and surface winds) is selected by the applicant. The condition proven is included in the procedures or information section of the flight manual. (It is not an operating limitation.)

(2) Buoyancy.

(i) Excess buoyancy is necessary to comply with the standard but the amount is dependent on several factors, such as number, size, and location of the sealed, watertight, compartments.

(ii) Wheel tires may be used for buoyancy if appropriate to the design.

(iii) Fuel tanks, if properly located and protected from potential rupture and if the aircraft has a system to rapidly empty the tanks, may be used also for buoyancy.

(iv) Buoyancy may be determined using the displacement of fresh water, with 62.42 pounds per cubic ft. density.

(3) Tests.

(i) If necessary, scale models may be used to prove the stability of the rotorcraft design for the sea state and wind conditions selected by the applicant.

(ii) The rotorcraft is subject to water tests per § 29.231. Compliance with part of this standard may be demonstrated or proven for the sea state or wave height, and wind conditions selected in conjunction with the TIA flight test program. This information is not an operating limitation.

(iii) Proposals should be submitted for evaluation.

AC 29.757. § 29.757 (Amendment 29-3) HULL AND AUXILIARY FLOAT STRENGTH.

a. Explanation. The standard is an objective or performance strength standard. The water loads in § 29.519 shall be imposed for the hull and auxiliary floats in a

conservative manner. The hull and float are “rigid” conventional amphibian or water-based aircraft structures.

b. Procedures.

(1) The water loads and conditions specified in § 29.519 shall be used. The pressures or load distributions should be appropriate to the design. ANC-3 and §§ 25.523 through 25.535 and Appendix B to FAR Part 25 may be of use.

(2) The water loads and applications of the loads are objective standards. A proposal and early discussions in the life of a project should be used to agree on an appropriate avenue or means of compliance. Tests or analysis supported by tests may be appropriate.

SUBPART D - DESIGN AND CONSTRUCTION

PERSONNEL AND CARGO ACCOMMODATIONS

AC 29.771. § 29.771 (Amendment 29-24) PILOT COMPARTMENT.

a. Explanation.

(1) Volumes have been written on human factors and their contribution to pilot workload and fatigue. This document cannot begin to address the myriad of considerations involved in pilot compartment design. The intent of the rule is simply to ensure that reasonable human factor engineering practices have been followed. Equipment should be logically grouped within the pilot's reach and view and be easy to operate. Seats should provide a reasonable level of comfort for the normal anthropometric range of pilots for a typical mission duration. Environmental considerations such as radiation from the sun through overhead windows should be addressed. Heating, cooling, and ventilation systems should be adequate for the range of expected operating conditions.

(2) Each pilot compartment and its equipment should allow the minimum flightcrew to perform their duties without unreasonable concentration or fatigue. If there is a provision/requirement for a second pilot, his station should be equipped with primary flight controls and have easy access to powerplant controls. Duplicate wheel brakes are recommended. Duplication of miscellaneous controls such as idle detent switches, RPM beep functions, nosewheel locks, and parking brakes has not been required. The need for duplicate instruments for the second pilot tends to be a function of cockpit size and panel configuration.

(3) Webster defines appurtenances as "accessory objects or apparatus." Items such as blowers, fans, and gyros should not have noise or vibration characteristics which could contribute to pilot fatigue or distraction. Instrument panel vibration is specifically addressed in § 29.1321.

(4) Although the rule prohibits in-flight rain or snow leaks that distract the crew or harm the structure, leaks occurring on the ground should also meet these requirements. In extreme cases where an offensive leak could not be stopped, the moisture has been rerouted to a noncritical area. In the context of this rule, "structure" is interpreted to include any part of the pilot compartment to include systems and equipment.

b. Procedures.

(1) Initial evaluation of the pilot compartment should be conducted on the ground. However, the cockpit assessment should be an ongoing effort throughout the flight test program. If a second pilot position is provided/required, the adequacy of

controls and instruments should be evaluated under all normally expected operating conditions. If a second pilot position is not provided/required, any passenger position in the pilot compartment should be evaluated to ensure that a passenger, properly briefed by the flightcrew, can sit comfortably without inadvertent interference with normal control operations. All equipment should be operated during at least one flight of typical mission profile and duration.

(2) Although many pilot compartment rain or snow leaks can be located on the ground by dousing the aircraft with a hose, in-flight leaks often occur in varying intensity and in different locations. Flight in rain should therefore be included during flight test.

AC 29.773. § 29.773 (Amendment 29-3) PILOT COMPARTMENT VIEW.

a. Nonprecipitation Conditions.

(1) Explanation.

(i) The procedures paragraph following this explanation discusses one means of demonstrating an adequate field of view.

(ii) Since glare and reflection often differ with the sun's inclination, consideration should be given to evaluating the cockpit at midday and in early morning or late afternoon. Windshields with embedded wire heating elements should be evaluated for distortion with the system both "ON" and "OFF."

(iii) If night approval is requested, all lighting, both internal and external, should be evaluated in likely combinations and under expected flight conditions. Although a certain amount of equipment reflection (avionics control heads, etc.) in the windscreen may be unavoidable, the pilot's normal field of view should be unobstructed. Windshield reflections often dictate large glareshields which result in reduction of the optimum field of view. This problem is most apparent in IFR equipped aircraft (having larger instrument panels and avionic consoles) which are operated in VFR utility roles. Landing and taxi lights should be exercised throughout their adjustment range (if applicable) to check for reflections, particularly in chin windows. Anticollision and strobe lights should be evaluated to ensure that frequency interaction and reflections off the rotor do not result in distractions to the pilot. The effect of cabin lighting on the pilot compartment view should be assessed, particularly on EMS configured aircraft where the in-flight use of cabin lights may be mandatory.

(2) Procedures. The following procedures are one acceptable means of evaluating pilot compartment field of view considering only those objects in the pilot compartment, the windshield, and its support structure in nonprecipitating conditions. The applicant's design is not required to meet these guidelines, and each design should be evaluated on its own merits. The area of visibility established in the following paragraphs will provide an acceptable level of visibility for a minimum crew of one (pilot). In the event that a minimum crew of two (pilot and copilot) is required, the

second pilot should have an area of visibility equivalent to that provided for the pilot but on the opposite side. In this event, the pilot's area of visibility to the left as shown in figure AC 29.733-1 needs only to comply to 60° left, and the area of visibility for the second pilot needs only to comply to 60° right.

(i) A single point established in accordance with the provisions of this paragraph constitutes the referenced eye position (i.e., a point midway between the two eyes) from which the central axis may be located. The referenced eye position is a reference datum point based on the eye location that permits the specified vision envelope required by figure AC 29.733-1, allows for posture slouch, and is the datum point from which the aircrew station geometry is constructed. The referenced eye position should be located by means of ship's coordinates that contain station reference number, water line, and butt line for both pilot and copilot, if applicable, and complies with:

(A) The pilot's seat in a normal operating position from which all controls can be utilized to their full travel, by an average subject, and which should provide for vertical adjustment of the seat of not less than 2.5 inches above and 2.5 inches below this initial vertical position.

(B) The seat back in its most upright position.

(C) The seat cushion depression being that caused by a subject weighing 170 to 200 pounds.

(D) The longitudinal axis of the rotorcraft to be that of "cruise attitude" ($0.9V_H$ or $0.9\ V_{NE}$ whichever is lower).

(E) The point established not beyond 1 inch to the right or left of the longitudinal centerline of the pilot's seat.

(F) All measurements made from the single point established in accordance with this paragraph.

(ii) A dual lens camera, as photo recorder, should be used in measuring the angles specified in the paragraphs listed below. Other methods, including the use of a goniometer, are acceptable if they produce equivalent areas to those obtained with a dual lens camera. When not using a dual lens camera, compensation should be made for one-half the distance which exists between the eyes, or 1¼ inches. With the referenced eye position located as indicated in paragraph AC 29.733a(2)(i), and utilizing binocular vision and azimuthal movement of the head and eyes about a radius, the center of which is 3 and 5/16 inches behind the referenced position (this point to be known as the central axis), the pilot should have the following minimum areas of vision measured from the appropriate eye position. (See figure AC 29.733-1.)

(A) 20° forward and above the horizon between 0° and 100° left.

(B) 20° forward and below the horizon between 10° and 100° left.

(C) 20° forward and below the horizon at 10° left increasing to a point 30° forward and below the horizon at 10° right.

(D) 50° forward and below the horizon between 10° right and 135° right.

(E) 20° forward and above the horizon at 0° increasing to a point 40° above the horizon at 80° right and 100° right and then decreasing to a point 20° forward and above the horizon at 135° right.

(iii) Any vertical obstruction which falls within the minimum area of visibility outlined in paragraph AC 29.733a(2)(ii) should be governed by the following:

(A) No vertical obstruction between 20° right and 20° left.

(B) Between 20° right and 135° right, vertical obstruction should not exceed 2.5 inches in width.

(C) Between 20° left and 100° left no vertical obstruction greater than 2.5 inches in width.

(iv) Any horizontal obstruction which falls within the minimum area of visibility outlined in paragraph AC 29.733a(2)(ii) should be governed by the following:

(A) The area 15° forward and above the horizon between 135° right and 40° left decreasing to a point 10° above the horizon at 100° left, and 15° forward and below the horizon between 135° right and 100° left should be free from horizontal obstructions.

(B) The area above and below the horizon which is between the minimum area of vision specified in paragraph AC 29.733a(2)(ii) and paragraph AC 29.733a(2)(iv)(A) is limited to one horizontal obstruction above the horizon, and one below the horizon. These horizontal obstructions should not be greater than 4 inches in width. An overhead window which will provide twice as much additional visibility as was lost due to the obstruction, should be located immediately above any obstruction which is above the horizon. This requirement is in addition to any area of visibility specified by paragraph AC 29.733a(2)(ii) which may be included in the overhead window area.

(C) If the instrument panel obstructs any required area between 10° left and 10° right below 20° forward and below the horizon, a window which affords triple equivalent additional visibility should be located immediately below and between the angles of 20° left and 20° right above 65° below the horizon.

(v) For steep rejected takeoffs and steep approaches such as used for oil rigs or confined heliports, the visibility should be such that the pilot can see the touchdown pad and sufficient additional area to the side and forward to provide both an accurate approach to the touchdown point as well as a satisfactory degree of depth perception. A 5-inch head movement, by the pilot, forward and/or sideward of the normal position is acceptable in determining compliance.

b. Precipitation Conditions.

(1) Explanation.

(i) Heavy rainfall is defined by the National Weather Service as one resulting in accumulation in excess of 0.03 inches in 6 minutes. On past designs, the windshield wipers required by § 29.1307 have been adequate to ensure satisfactory view at low to medium airspeeds. Airflow over the windshield and/or wipers has normally been sufficient to keep the windshield clear at higher airspeeds. Obscuration of side windows by rainfall should be addressed, particularly for confined area approaches.

(ii) If icing certification is requested, a means must be provided to ensure that a sufficiently large viewing area is kept clear of ice to permit safe operation. As a minimum, a clear area on the windshield should be available, although some configurations could require clear view in other areas, in order to provide an adequate level of safety in certain operations.

(iii) An openable “clear view” window must be provided for the first pilot. The rule requires that the window be openable in heavy rain at forward speeds to V_H and in the worst icing conditions requested for certification. The rule further requires a field of view through this opening which is adequate for safe operation. Although the rule implies that a safe field of view must be provided for airspeeds up to V_H, it has not been interpreted as such. In most designs, the only practical location for an openable window is in a side panel or door. Aircraft sideslip limits normally restrict useful view from this window opening at high airspeeds. The intent is to provide the pilot with an adequate view for safe approach and landing in the event that normal windshield clearing systems malfunction.

(2) Procedures. Compliance with the requirements of this rule should be checked by flying the aircraft in the applicable environmental conditions. Although wipers can be partially checked on the ground with a hose, their effectiveness at higher airspeeds should also be verified. Likewise, additional or alternate rain removal systems should be exercised throughout the required airspeed range. The need for windshield wash systems should be assessed, particularly if the aircraft will be used in an offshore salt spray environment. Systems provided to ensure clear view in icing conditions should be evaluated during icing flight tests. The location and effectiveness of the openable window should be evaluated following failure of the rain removal and anti-ice system (if applicable). The view through the window opening should permit

safe operation from hover up to a reasonable approach airspeed. Care should be exercised during flight test to stay within airframe sideslip limits.

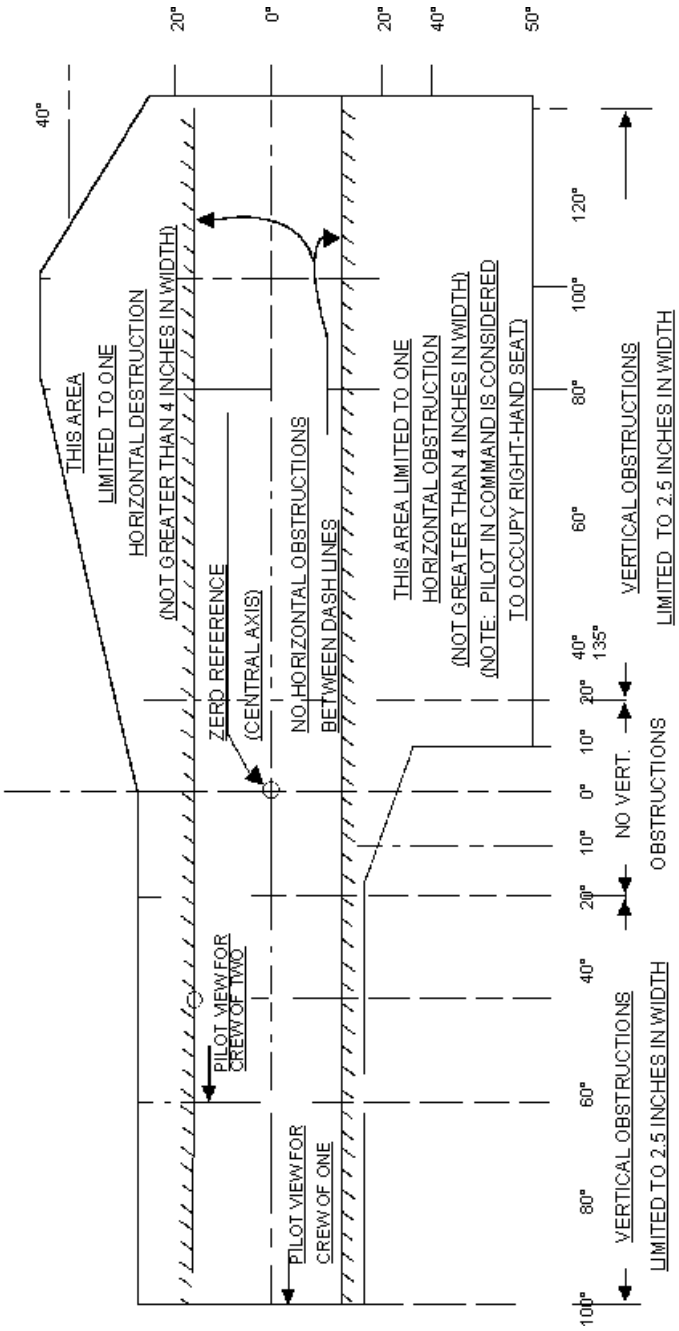

FIGURE AC 29.773-1 COCKPIT VISIBILITY

AC 29.775. § 29.775 WINDSHIELDS AND WINDOWS.

a. Explanation. Nonsplintering safety glass is specified in windshields and windows containing glass to protect crew and passengers if window fracturing occurs. In any case, windshields and windows are to be made of transparent materials which will not break into dangerous fragments.

b. Procedures.

(1) Use nonsplintering safety glass in windshield or window applications which contain glass rather than plastic acrylics, polycarbonates, epoxies, etc. The glass selected should meet a specification such as MIL-G-25871, and if new vendors are selected by an airframe manufacturer, test data should be obtained from the vendor to demonstrate the safety glass provided meets an acceptable specification and provides adequate nonsplintering capability.

(2) Windshields and windows should be designed so that either --

(i) They are made of material which will not cause a serious reduction in the field of view by becoming suddenly opaque; or

(ii) Any one panel becoming opaque will not cause a serious reduction in the field of view (reference § 29.773).

(3) In the event of any reasonably probable failure, a transparency heating system must be incapable of raising the temperature of any windshield or window to a point where there would be a danger of fire or structural failure (reference § 29.1309).

AC 29.775A. § 29.775 (Amendment 29-31) WINDSHIELDS AND WINDOWS.

a. Explanation. Amendment 29-31 changed § 29.775 to allow the use of material other than nonsplintering safety glass; i.e., plastics are allowed. Additionally, whatever material is used should not break into dangerous fragments upon impact.

b. Procedures. The procedures contained in paragraph AC 29.775 apply equally to glass or plastics.

AC 29.775B. § 29.775 (Amendment 29-40) WINDSHIELDS AND WINDOWS.

a. Explanation. Amendment 29-40 added § 29.631 which requires the rotorcraft be designed to ensure capability of continued safe flight and landing (Category A) or safe landing (Category B) after impact with a 2.2 lb (1.0 kg) bird when the velocity of the rotorcraft (relative to the bird along the flight path of the rotorcraft) is equal to V_{NE} or V_H (whichever is lesser) at altitudes up to 8,000 feet.

b. Procedures. In addition to the procedures outlined above, compliance with § 29.631, should be demonstrated by tests or analysis supported by test evidence that the windshield will withstand, without penetration, the impact with a 2.2 lb (1.0 kg. bird) at V_{NE} or V_H (whichever is lesser) at altitudes up to 8,000 feet. See paragraph AC 29.631 (§ 29.631) for additional information.

AC 29.777. § 29.777 COCKPIT CONTROLS.

a. Explanation. This section defines the general cockpit control requirements. Cockpit control location and arrangement, with respect to the pilot's seat, must be designed to accommodate pilots from 5'2" to 6'0" in height.

b. Procedures.

(1) The applicant should have a cockpit design report which documents the anthropometric suitability of the cockpit. Subsequent cockpit evaluations of control movement and location should be conducted with adjustable seats and/or controls positioned in a flight position for the subject pilot. Essential controls should be evaluated with the shoulder harness locked in the retracted position. Evaluation pilots should be aware of their individual anthropometric measurements and temper their assessments based on this information. Ideally, a new design should include evaluations by a range of different sized subject pilots. Control considerations for a second pilot position are the same as for the pilot station. Paragraph AC 29.771 discusses current philosophy concerning duplication of controls.

(2) As background, the following are examples of cockpit control issues which should be avoided:

(i) Collective control blocking the lateral movement of a pilot's leg, which in turn restricts the left lateral cyclic displacement.

(ii) Seat or seat cushion impeding the aft cyclic movement.

(iii) Inadequate space for large feet equipped with large flight boots.

(iv) Control/seat relationship which requires unusual pilot contortions at extreme control displacements.

(v) Control/seat relationship or control system geometry which will not permit adequate mechanical advantage with unboosted controls or in a boost OFF situation.

(vi) Addition of control panels or equipment to instrument panels or consoles which restrict full control throw.

(vii) Brake pedal geometry which results in inadvertent brake application upon displacement of the directional controls.

(viii) Controls for accessories or equipment which require a two-handed operation.

(ix) Emergency external cargo release controls which cannot be activated without releasing the primary flight controls.

(x) Essential controls which cannot be actuated during emergency conditions with the shoulder harness locked.

(xi) Throttle controls which can be inadvertently moved through idle to the cutoff position.

(xii) Switches, buttons, or other controls which can be inadvertently activated during routine cockpit activity including cockpit entry.

(xiii) Failure to account for operation with the pilot wearing bulky winter clothing.

(xiv) Aft cyclic movement limited by the pilot's body with a fore and aft adjustable seat in the full forward position.

AC 29.779. § 29.779 (Amendment 29-24) MOTION AND EFFECT OF COCKPIT CONTROLS.

a. Explanation. The section standardizes motion and effect of cockpit controls. While this paragraph specifically addresses primary flight controls, engine power controls, and landing gear controls, it applies to all cockpit controls not addressed in other paragraphs.

b. Procedures.

(1) The cyclic should be mechanized such that movement of the control results in a corresponding sense of aircraft motion in the same axis. While a certain amount of coupling may be present following a pure control input in a given axis, that coupling should not be objectionable to the pilot. Collective pitch control should be mechanized such that an upward movement of the collective results in a corresponding relative motion of the aircraft in the vertical plane. Again, coupling should not be objectionable. Care should be taken to ensure that the primary pilot perception of collective motion is in the vertical plane. The objective is to clearly differentiate collective motion from that associated with an airplane throttle. The rule is self-explanatory on the subject of engine power controls. A distinction is made between normal landing gear controls and emergency controls. Emergency controls may operate in a sense which might not correspond to the direction of resultant gear motion.

(2) The recommended operating convention and “switchology” for miscellaneous controls is:

(i) Up/forward = on/increase.

(ii) Down/aft = off/decrease.

(iii) Variable rotary controls should move clockwise from the OFF position, through an increasing range, to the full ON position. For some variable intensity controls such as instrument lighting, the desired minimum setting may not be completely off. Pushbuttons not giving an obvious indication of mechanical position should be configured such that the flightcrew has a clear indication of switch actuation under both day and night (if applicable) conditions. Failure of the indication should be shown to be free of hazards.

(3) Slew or “beep” switches associated with flight control system applications warrant special attention. The recommended conventions for control-mounted single, or multifunction, two or four-way “beep” switches are:

(i) Cyclic.

Switch Direction	Flight Control System /Autopilot Configuration	Aircraft Response
Forward/up	basic trim	nose down
	airspeed/groundspeed mode selected	increased airspeed forward speed reference
	vertical speed mode selected (without airspeed mode engaged)	increased rate of descent/decreased rate of climb
	hover mode selected	increased ground-speed or forward acceleration reference
Left	basic trim	left wing down
	heading mode selected	slew heading reference left
	hover mode selected	increased ground-speed or acceleration reference to left

(ii) Collective (assumes switch is mounted on top of grip).

Switch Direction	Flight Control System /Autopilot Configuration	Aircraft Response
Forward	control position hold	down collective
	vertical speed mode selected	increased rate of descent/decreased rate of climb
	hover mode selected	decreased hover height reference
Left	control position hold	increase left pedal
	hover mode selected	slew heading reference left

(iii) Opinions are divided concerning the preferred convention for forward and rearward motion of slew switches mounted atop the collective grip. Part of the reason appears to stem from the fact that such a switch is never used in a purely control position trim capacity. The switch has normally remained nonfunctional until a vertical autopilot mode is selected. At that point, the switch is viewed by one pilot/engineer contingent as either an autopilot reference slew function or a power increase/decrease switch, which should follow the “forward equals increase” convention. The other group views the switch as a form of control position trim and finds the “forward equals down collective” convention to be more consistent with the sensing used for the cyclic beep switches. An obvious solution is to mount collective/vertical axis switches in a vertical orientation on the grip. Barring that alternative, viable arguments can be made for either philosophy. The recommended convention was selected following a survey of manufacturers and test pilots.

AC 29.783. § 29.783 (Amendment 29-20) DOORS.

a. Explanation. This regulation requires at least one door for all closed cabin rotorcraft. Standards for all doors and airstair doors are included. To assure that the doors provide normal entry and egress without causing or contributing to hazardous conditions, even after a minor crash, the following requirements are imposed:

(1) Passenger doors may not be located with respect to any rotor to endanger persons using the doors as instructed.

(2) Means are required for locking crew and external passenger doors to prevent their opening in flight due--

(i) To inadvertent operation; or

(ii) To mechanical failure.

(3) External doors are required to be openable from the inside or outside by simple and obvious means.

(4) Reasonable provisions to prevent jamming of external doors are required as specified and to assure that an “airstair door” is useable.

(5) The following visual indications of external doors being closed and locked are required:

(i) Direct visual inspection means by crewmembers of the locking mechanism of all external doors.

(ii) Visual means to signal to crewmembers “when normally used external doors are closed and fully locked.”

(6) For certain outward opening doors, an auxiliary safety latching device is required “to prevent the door from opening when the primary latching mechanism fails.” Suitable operating procedures to prevent this device from being used during takeoff and landing are required if the door cannot be opened from outside the rotorcraft (reference § 29.783(c)) with the device in place.

b. Procedures.

(1) Passenger doors should be located as far as possible from the auxiliary rotors. The doors may be hinged and door open stops may be provided to separate entering and egressing passengers from the auxiliary rotor blades. If necessary for the design, “appropriate instructions” should be provided for all passenger doors concerning entering and leaving the rotorcraft and safe use of each door relative to all rotors. These instructions should be obvious to a passenger using the door, contain large enough letters to be readily legible, and use letters or background colors associated with danger (i.e. orange or red).

(2) Means to prevent the opening of doors in flight.

(i) Means to prevent the opening of doors in flight due to inadvertent operation may be provided by recessing door handles to prevent their inadvertent operation by the normal movement of passengers about the cabin. If recessing the door handle is impractical, a cover may be provided which will prevent inadvertent operation of the handle, but the cover should be of such design that it does not obscure

the door handle or its operating instructions. It must not unduly interfere with deliberate operation of the door handle by passenger or crew. Transparent or nonsolid covers, easily displaced by deliberate actions, have been used to prevent inadvertent door handle operation. Some rotorcraft designs meet this requirement by requiring that passengers wear their seat belts at all times during flight. This design requires that the "fasten seat belt" sign be on at all times the rotorcraft is in flight (for practical purposes, the "fasten seat belt" light is generally designed to be on when power is applied to the rotorcraft).

(ii) Means to prevent inadvertent door opening in flight due to "mechanical failure" is most efficiently provided by multiple door latches and multiple load path door locking mechanisms so that the door will remain locked after a single failure. Care should be taken in the design of multiple load path latches and mechanisms to assure independence of all failures and to consider the effort of deflections after failures (if a failure allows deflections into the airstream sufficient to increase aerodynamic loads, the increase in loads should be accounted for; if a failure allows significant movement of latching components, the deflections should be accurately accounted for to assure that disengagement of nonfailed latches does not occur).

(3) The means to open normally used external doors is required to be simple (such as a rotating handle) and to be accessible from the inside or the outside. To prevent the inadvertent use of emergency exits (separate from normal entry doors) for routine entry and exit with the resulting "wear and tear," the normally used doors for entry and exits should be equipped with operating handles and instructions distinctly different from those of the emergency exits. Obviously, the above does not apply to normally used exits which are also the primary (or only) emergency exits.

(4) Reasonable provisions to prevent jamming of external doors include the following:

(i) Design features of doors which are insensitive to large fuselage deflections for door operation.

(ii) Provision of clearance between door and door frame latching devices sufficient to allow some relative deflection between the door and door frame and still allow door operation. The relative deflections may be determined by static test or by an analysis approved by the FAA/AUTHORITY.

(iii) Sliding doors are frequently used in transport rotorcraft for versatility and utility reasons. If sliding doors are used, one of the following features of design may be required to assure that the requirements of § 29.783(d) are met:

(A) The sliding door(s) must be provided with jettison features which allow release of the door(s) from the tracks (to preclude jamming). The emergency release is generally separate and distinct from the normal door handle.

(B) Separate emergency exits of appropriate size and number may be installed in the sliding door(s).

(C) Separate emergency exits of appropriate size and number may be installed in addition to the sliding door(s).

(iv) Whether or not the sliding door is qualified as an emergency exit, it must meet the remaining door design standards.

(5) Direct visual inspection means by crewmembers of the locking mechanism of external doors may provide for visual observation of the door frame and the latching components for engagement or for visual observation of “flag” areas of the locking mechanism. If “flag” areas are used (such as tabs or shoulders which protrude into the crewmember’s line of sight when the latches are engaged (locked)), care should be taken to assure that the tab is permanently affixed (or an integral part) to the locking mechanism; and it should not give erroneous readings to the crewmembers under any foreseeable operation or failure of the latching mechanism. “Visual means to signal” to crewmembers “when normally used external doors are closed and fully locked” may be provided by annunciator panel lights or equivalent means. The visual indicating system may consist of an indicator for each individual door, or a system connecting all doors in series. If the latter system is used, it need not necessarily show which door is not fully locked. It is not necessary that more than one crewmember be able to ascertain by a visual signal that all external doors normally used by the crew in supplying the rotorcraft, or in loading and unloading passengers and cargo, are fully closed and locked. The visual signal should be located so that it may easily be seen by the appropriate crewmember from his station.

(6) For § 29.783(f), the auxiliary safety latching device to “prevent the door from opening when the primary latching mechanism fails” can be provided by the same multiple load path features which meet the § 29.783(c) requirement for prevention of door opening in flight after a “mechanical failure.” If a completely separate “auxiliary safety latching device” is used, it should allow the door to be opened from the inside, or outside, when in place. If the device must be removed to allow use of the door, “suitable operating procedures” (i.e., placards and RFM instructions) will be required for removal of the device during takeoff and landing.

(7) Additional standards for “airstair doors” were added by Amendment 29-20.

(i) An analysis or test may be used to prove compliance with deformation standards in § 29.783(g)(1).

(ii) A sketch, drawing, or demonstration may be used to prove the door is useable for the conditions described in § 29.783(g)(2).

AC 29.783A. § 29.783 (Amendment 29-31) DOORS.

a. Explanation.

(1) Amendment 29-30 extends the requirements of § 29.783 to:

- include each external door, not just passenger doors; and,

- require provision of door location and/or door operation procedures to protect persons from danger from propellers, engine intakes, and engine exhausts. (Protection from rotors are already included in the standard.)

(2) Amendment 29-31 adds a new paragraph (h) to § 29.783 which requires for doors used for ditching egress to have a means to secure the “ditching exits” in an open position and remain securely open in the appropriate Sea State used for compliance with § 29.801, paragraph AC 29.801.

b. Procedures. The procedures of paragraph AC 29.783 continue to apply to § 29.783 (and Amendment 29-31) with the following additions:

(1) Occupants of the rotorcraft and servicing personnel are now required to be protected from injury when using any external door to enter or egress the rotorcraft and when loading cargo or servicing the rotorcraft. Consideration should be given to door location and/or operating procedures to include protection from propellers (if equipped) and engine inlets and exhausts, as well as from rotors.

(2) These new standards clarify that engine exhausts, engine inlets, and propellers, as well as rotors, are potentially hazardous and should be located or designed to protect rotorcraft occupants and ground personnel or use door latching and operating procedures to protect those persons. Operating procedures for the door, including readily visible markings, should be provided to minimize injury to personnel when practical component locations or component design features, alone, do not assure possible freedom from injury.

(3) For § 29.783(h), a means such as a cable, chain, pin, or mechanical linkage should be provided to secure doors used as ditching exits in the open position. The means should be shown to be effective under rotorcraft attitudes and dynamic conditions common to ditching. The sea states for ditching approval in accordance with § 29.801 are found in paragraph AC 29.801. Demonstrations under actual ditching conditions are not mandated for substantiation purposes, but the substantiation methodology should be reliable, i.e., an analytical or test method demonstrated to be reliable and used in previous structural substantiation programs.

AC 29.785. § 29.785 SEATS, SAFETY BELTS, AND HARNESSES.

a. Explanation.

(1) This section requires that seats, belts, harnesses, and adjacent parts of the rotorcraft be substantiated for the structural loads resulting from the inertia forces of § 29.561 as well as normal flight and ground inertia forces on a 170-pound occupant. The inertia forces of § 29.561 are ultimate lo0ads and must be multiplied by a factor of 1.33 in determining the "strength of attachment" of each seat to structure and each belt or harness to structure. The seat, belt, etc., are required to sustain applied loads and to protect the occupant from serious injury. The pilot seats must also sustain the effects of the pilot forces of § 29.397.

(2) In addition, the "occupant must be protected from head injury" by the seat belt and one of the following:

(i) A harness to prevent the head from contacting an injurious object.

(ii) Elimination of injurious object within striking distance of the head.

(iii) A cushioned rest as specified.

(3) Handholds are required to steady occupants using the aisle in moderately rough air.

(4) Projecting objects which would injure occupants "in normal flight must be padded."

b. Procedures.

(1) Each seat with its belts and harnesses are to be substantiated for the flight, ground, and emergency landing loads of § 29.561 by structural test or stress analysis. Section 29.785(b) states that "each seat must be approved." Certification approval can be gained by Technical Standard Order (TSO) approval or by accomplishing sufficient structural substantiation to gain FAA/AUTHORITY approval of the seat and its belt(s) as part of the Type Design of the rotorcraft. TSO No. C-39 concerns standards for aircraft seats, including rotorcraft seats. If TSO No. C-39 is used as an approval basis for a specific rotorcraft seat, the seat should be checked to assure it has been substantiated for the vertical (up and down) and side loads imposed by installation in the aircraft. For example, TSO No. C-39 (and NAS 809) specifies an ultimate down load of 4.0g which is in agreement with the 4.0g emergency landing load factor of § 29.561, but it may be less than the design maneuver load factor (which can be as high as 3.5g limit or 5.25g ultimate).

(i) The 1.33 factor is specified for substantiation of attachments of each seat to the structure and each safety belt or harness to the seat or structure for § 29.561 loads, whether analysis or test is used.

(ii) If static testing of seats, belts, and harnesses is used, the body block of NAS 809 may be used. The corners of the NAS 809 body block may be radiused and padded if it is found that the small radii cause premature, unrealistic crippling of thin wall tubing or other structure used in the seat.

(iii) The substantiation of the pilot seats is required to include pilot forces of § 29.397 in conjunction with normal flight and ground loads. For example, the pilot foot force (195 pounds ultimate) must be reacted by the seat.

(2) The following criteria have been found satisfactory for preventing occupant head injuries:

(i) If a harness is used, it should support the shoulders without applying hazardous loads to the side or front of the neck. It should be easily donned and a single point release with the seat belt is preferred. If separate release is provided, it must be simple, compatible with the seat belt release, and near the seat belt release. The harness should be tested in conjunction with the seat belt using a “body block” similar to that of NAS 809 if possible. If the harness is tested separately from the belt, it should be tested to 50 percent of the forward crash loads for the entire occupant weight of 170 pounds, unless that percentage distribution is found to be unrealistic by a rational analysis.

(ii) Elimination of injurious objects within striking distance of the head and other vital parts can be accomplished by removal of objects with sharp edges or rigid surfaces from within striking distance of vital parts of the occupant. Dimensions and weights for typical occupants are available in U.S. Army USAAULABS Reports 70-22 (August 1969) and 66-39 (June 1966) and NACA Report TN 2991 (August 1953). Because of the range of occupant head striking distance, a combination of “elimination of injurious objects” and “cushioned rests” may be required for some interior configurations.

(iii) An acceptable cushioned rest can be provided by use of a 1-inch thickness of foamed polyvinyl chloride (PVC), or equivalent energy absorbing material. The density of material should be in the 5 to 10 pounds per cubic foot density range. PVC foam has the property of absorbing energy efficiently with negligible rebond effects. PVC foam recovers slowly to the original configuration after deformation. If PVC foam is used, however, care must be taken in its application relative to its flammability characteristics (reference § 29.853).

(3) Handholds for the occupants are generally provided by seat backs adjacent to the aisle. If the seat backs fold, the amount of support provided by the seat backs before they fold must be evaluated in a furnished interior or mock up. To provide

adequate support, the seat back may use an easily disengaged latch or adequate friction in the hinge mechanism to obtain adequate support. Handholds along the aisle are, of course, not needed for rotorcraft with no aisles or where seat belts must be fastened during flight.

(4) Projecting objects which could injure occupants in normal flight should be padded. The amount of padding required depends on the location, size, and minimum radius of the projecting object. In general, this requirement will mean that sharp edges must be padded with one-half inch of PVC foam or equivalent (5 to 10 lbs. density), while objects with radii in excess of 1 inch may meet the requirements of § 29.785(e) with a lesser amount of energy absorbing padding, if it can be contacted only by persons "moving about in the rotorcraft in normal flight."

AC 29.785A. § 29.785 (Amendment 29-29) SEATS, BERTHS, BELTS, SAFETY BELTS, AND HARNESSES.

a. Explanation. Amendment 29-29 makes the following changes to § 29.785:

(1) The title of § 29.785 now includes berths (which would include litters).

(2) Section 29.785(a) has been revised to include reference to the new § 29.562, "Emergency Landing Dynamic Conditions."

(3) Section 29.785(b) has been revised to include a reference to the new § 29.562(c)(5) head injury criteria and to describe a torso restraint system that is contained in TSO-C114.

(4) Section 29.785(f) has been revised to change the percentage of load distribution for safety belt and harness combination to 60-40.

(5) A new § 29.785(i) has been added which provides a list of "seating device system" components.

(6) A new § 29.785(j) provides for deformations of the seat energy absorption device system installed to meet the requirements of § 29.562 but requires that the system "remain intact and not interfere with rapid evacuation of the rotorcraft." Further "structural" performance standards are contained in §§ 29.562(c)(1) and (2). AC 20-137 also contains information.

(7) A new § 29.785(k) provides static strength and restraint requirements for litters and berths. Litters may be oriented laterally as well as longitudinally in the rotorcraft. Dynamic tests of litters are not required. For longitudinally oriented litters, features should be provided to protect the occupant from the increased loads in § 29.561(b) of Amendment 29-29.

b. Procedures. The procedures of paragraph AC 29.785 still apply to static substantiation of the seats, berths, safety belts, and harness. In addition:

(1) Compliance with § 29.562 (except litters are not included) and § 29.561(b) is required.

(2) Section 29.562 includes a specific pass fail criteria, which includes head injury criteria, (reference AC 20-137).

(3) Shoulder harnesses need only be substantiated for 40 percent of total occupant load rather than the former 60 percent adopted by Amendment 29-24.

(4) AC 20-137 provides guidance for evaluating the functioning of a seating energy absorption device system under dynamic test conditions. Stroking is associated with the vertical-horizontal impact case and is recognized in the static strength substantiation.

(5) Berths or litters installed within 15° or less of the rotorcraft longitudinal axis (oriented longitudinally) shall use a combination of restraint devices, such as are required to be equipped with a padded end-board, cloth diaphragm, or equivalent means to withstand and distribute the occupant loads resulting from § 29.561(b) requirements. Other berths or litters may be equipped with straps or safety belts to withstand the forward reaction of § 29.561(b) as well as other loads, including flight loads.

(i) Berths/litters may be substantiated by static load tests, analysis, or a combination thereof and need not be substantiated to the 1.33 fitting factor of seat installations.

(ii) The berth/litter occupant's head, neck, and spine should be protected from (landing) impact forward loads by appropriate design means; e.g.,

- non-longitudinal orientation of the berth/litter; or
- "feet forward" orientation; or
- distribution of an appropriate percentage of forward loads on the shoulders (not solely to the head and spine).

(iii) Recommendations for litter occupants:

- If the occupant's head is oriented forward, a shoulder harness should be provided, in conjunction with body and leg straps that prevents the occupant's head from falling off the litter. A padded end board, diaphragm, etc., may be used, provided head and spinal loads are alleviated or prevented.

- If the occupant's feet are oriented forward, the padded end board may also be used in combination with the body and leg straps or other such restraints.

- Multiple or combinations of devices should be used to distribute the occupant loads as well as protect the occupant from possible neck and spine compression.

AC 29.787. § 29.787 (Amendment 29-12) CARGO AND BAGGAGE COMPARTMENTS.

a. Explanation.

(1) This section requires that cargo and baggage compartments be designed for normal flight and ground loads and for a 4g ultimate forward load condition. Maximum placarded weights and critical distributions are to be considered.

(2) Means to prevent cargo shifting and contact between any cargo lamp bulb and cargo is to be provided.

b. Procedures. Structure tests or analyses may be used for substantiation for the design loads.

(1) Nets or straps may be used to prevent cargo shifting. The nets or straps are required to be substantiated for the structural loads. They need a means for adjustment to assure proper restraint for different sizes and shapes of cargo.

(2) Cargo lamp bulbs need to be guarded, recessed, or placed in upper inside corners to prevent contact with cargo.

AC 29.787A. § 29.787 (Amendment 29-31) CARGO AND BAGGAGE COMPARTMENTS.

a. Explanation. Amendment 29-31 adds two subparagraphs to § 29.787 (c) which clarify that cargo and baggage compartments should be designed to protect occupants from injury by the compartment contents during emergency landings. This may be done by location or by retention provisions. The new paragraphs also add a requirement that the compartment contents should not cause injury when subjected to the loads of § 29.561.

b. Procedures. The procedures of paragraph AC 29.787 are still applicable. In addition to the forward load, the cargo and baggage compartments should be designed to withstand loads in other directions as specified in § 29.561. Also, the compartment may be shown to provide protection of occupants by location; i.e., cargo and baggage compartments may be shown to be located in a position where loose contents will not endanger occupants in an emergency landing. If the compartment is located above or

behind the occupied area, § 29.561(c) still applies. If a compartment is in the occupied area, § 29.561(b) may apply.

AC 29.801. § 29.801 (Amendment 29-12) DITCHING.

a. Explanation.

(1) Ditching certification is accomplished only if requested by the applicant.

(2) Ditching may be defined as an emergency landing on the water, deliberately executed, with the intent of abandoning the rotorcraft as soon as practical. The rotorcraft is assumed to be intact prior to water entry with all controls and essential systems, except engines, functioning properly.

(3) The regulation requires demonstration of the flotation and trim requirements under “reasonably probable water conditions.” The FAA/AUTHORITY has determined that a sea state 4 is representative of reasonably probable water conditions to be encountered. Therefore, demonstration of compliance with the ditching requirements for at least sea state 4 water conditions is considered to satisfy the reasonably probable requirement.

(4) A sea state 4 is defined as a moderate sea with significant wave heights of 4 to 8 feet with a height-to-length ratio of:

(i) 1:12.5 for Category A rotorcraft.

(ii) 1:10 for Category B rotorcraft with Category A engine isolation.

(iii) 1:8 for Category B rotorcraft.

The source of the sea state definition is the World Meteorological Organization (WMO) Table. (See figure AC 29.801-1.)

(5) Ditching certification encompasses four primary areas of concern: rotorcraft water entry, rotorcraft flotation and trim, occupant egress, and occupant survival.

(6) The rule requires that after ditching in reasonably probable water conditions, the flotation time and trim of the rotorcraft will allow the occupants to leave the rotorcraft and enter liferafts. This means that the rotorcraft should remain sufficiently upright and in adequate trim to permit safe and orderly evacuation of all personnel.

(7) For a rotorcraft to be certified for ditching, emergency exits must be provided which will meet the requirements of § 29.807(d).

(8) The safety and ditching equipment requirements are addressed in §§ 29.1411, 29.1415, and 29.1561 and specified in the operating rules (Parts 91, 121, 127, and 135). As used in § 29.1415, the term ditching equipment would more properly be described as occupant water survival equipment. Ditching equipment is required for extended overwater operations (more than 50 nautical miles from the nearest shoreline and more than 50 nautical miles from an offshore heliport structure). However, ditching certification should be accomplished with the maximum required quantity of ditching equipment regardless of possible operational use.

(9) Current practices allow wide latitude in the design of cabin interiors and consequently, the stowage provisions for safety and ditching equipment. Rotorcraft manufacturers may deliver aircraft with unfinished (green) interiors that are to be completed by the purchaser or modifier. These various “configurations” present problems for certifying the rotorcraft for ditching.

(i) In the past, “segmented” certification has been permitted to accommodate this practice. That is, the rotorcraft manufacturer shows compliance with the flotation time, trim, and emergency exit requirements while the purchaser or modifier shows compliance with the equipment provisions and egress requirements with the completed interior. This procedure requires close cooperation and coordination between the manufacturer, purchaser or modifier, and the FAA/AUTHORITY.

(ii) The rotorcraft manufacturer may elect to establish a “token” interior for ditching certification. This interior may subsequently be modified by a supplemental type certificate or a field approval. Compliance with the ditching requirements should be reviewed after any interior configuration and limitations changes where applicable.

(iii) The Rotorcraft Flight Manual and supplements deserve special attention if a “segmented” certification procedure is pursued.

b. Procedures. The following guidance criteria has been derived from past FAA/AUTHORITY certification policy and experience. Demonstration of compliance to other criteria may produce acceptable results if adequately justified by rational analysis. Model tests of the appropriate ditching configuration may be conducted to demonstrate satisfactory water entry and flotation and trim characteristics where satisfactory correlation between model testing and flight testing has been established. Model tests and other data from rotorcraft of similar configurations may be used to satisfy the ditching requirements where appropriate.

(1) Water entry.

(i) Tests should be conducted to establish procedures and techniques to be used for water entry. These tests should include determination of optimum pitch attitude and forward velocity for ditching in a calm sea as well as entry procedures for the highest sea state to be demonstrated (e.g., the recommended part of the wave on which to land). Procedures for all engines operating, one engine inoperative, and all

engines inoperative conditions should be established. However, only the procedures for the most critical condition (usually all engines inoperative) need to be verified by water entry tests.

(ii) The ditching structural design consideration should be based on water impact with a rotor lift of not more than two-thirds of the maximum design weight acting through the center of gravity under the following conditions:

(A) For entry into a calm sea--

(1) The optimum pitch attitude as determined in 337(b)(1)(i) with consideration for pitch attitude variations that would reasonably be expected to occur in service;

(2) Forward speeds from zero up to the speed defining the knee of the height-velocity (HV) diagram;

(3) Vertical descent velocity of 5 feet per second; and

(4) Yaw attitudes up to 15°.

(B) For entry into the maximum demonstrated sea state--

(1) The optimum pitch attitude and entry procedure as established in (b)(1)(i);

(2) The forward speed defined by the knee of the HV diagram reduced by the wind speed associated with each applicable sea state;

(3) Vertical descent velocity of 5 feet per second; and

(4) Yaw attitudes up to 15°.

(C) The float system attachment hardware should be shown to be structurally adequate to withstand water loads during water entry when both deflated and stowed and fully inflated (unless in-flight inflation is prohibited). Water entry conditions should correspond to those established in paragraphs AC 29.801(b)(1)(ii)(A) and (B). The appropriate vertical loads and drag loads determined from water entry conditions (or as limited by flight manual procedures) should be addressed. The effects of the vertical loads and the drag loads may be considered separately for the analysis.

(D) Probable damage due to water impact to the airframe/hull should be considered during the water entry evaluations; i.e., failure of windows, doors, skins, panels, etc.

(2) Flotation Systems.

(i) Normally inflated. Fixed flotation systems intended for emergency ditching use only and not for amphibian or limited amphibian duty should be evaluated for:

(A) Structural integrity when subjected to:

(1) Air loads throughout the approved flight envelope with floats installed;

(2) Water loads during water entry; and

(3) Water loads after water entry at speeds likely to be experienced after water impact.

(B) Rotorcraft handling qualities throughout the approved flight envelope with floats installed.

(ii) Normally deflated. Emergency flotation systems which are normally stowed in a deflated condition and inflated either in flight or after water contact during an emergency ditching should be evaluated for:

(A) Inflation. The float activation means may be either fully automatic or manual with a means to verify primary actuation system integrity prior to each flight. If manually inflated, the float activation switch should be on one of the primary flight controls and should be safeguarded against spontaneous or inadvertent actuation for all flight conditions.

(1) The inflation system design should minimize the probability of the floats not inflating properly or inflating asymmetrically. This may be accomplished by use of a single inflation agent container or multiple container system interconnected together. Redundant inflation activation systems will also normally be required. If the primary actuation system is electrical, a mechanical backup actuation system will usually provide the necessary reliability. A secondary electrical actuation system may also be acceptable if adequate electrical system independence and reliability can be documented.

(2) The inflation system should be safeguarded against spontaneous or inadvertent actuation for all flight conditions. It should be demonstrated that float inflation at any flight condition within the approved operating envelope will not result in a hazardous condition unless the safeguarding system is shown to be extremely reliable. One safeguarding method that has been successfully used on previous certification programs is to provide a separate float system arming circuit which must be activated before inflation can be initiated.

(3) The maximum airspeeds for intentional in-flight actuation of the float system and for flight with the floats inflated should be established as limitations in the RFM unless in-flight actuation is prohibited by the RFM.

(4) The inflation time from actuation to neutral buoyancy should be short enough to prevent the rotorcraft from becoming more than partially submerged assuming actuation upon water contact.

(5) A means should be provided for checking the pressure of the gas storage cylinders prior to takeoff. A table of acceptable gas cylinder pressure variation with ambient temperature and altitude (if applicable) should be provided.

(6) A means should be provided to minimize the possibility of overinflation of the float bags under any reasonably probable actuation conditions.

(7) The ability of the floats to inflate without puncture when subjected to actual water pressures should be substantiated. A full-scale rotorcraft immersion demonstration in a calm body of water is one acceptable method of substantiation. Other methods of substantiation may be acceptable depending upon the particular design of the flotation system.

(B) Structural Integrity. The flotation bags should be evaluated for loads resulting from:

(1) Airloads during inflation and fully inflated for the most critical flight conditions and water loads with fully inflated floats during water impact for the water entry conditions established under paragraph AC 29.801(b)(1)(ii) for rotorcraft desiring float deployment before water entry; or

(2) Water loads during inflation after water entry.

(C) Handling Qualities. Rotorcraft handling qualities should be verified to comply with the applicable regulations throughout the approved operating envelopes for:

(1) The deflated and stowed condition;

(2) The fully inflated condition; and

(3) The in-flight inflation condition.

(3) Flotation and Trim. The flotation and trim characteristics should be investigated for a range of a sea states from zero to the maximum selected by the applicant and should be satisfactory in waves having height/length ratios of 1:12.5 for Category A rotorcraft, 1:10 for Category B rotorcraft with Category A engine isolation, and 1:8 for Category B rotorcraft.

(i) Flotation and trim characteristics should be demonstrated to be satisfactory to at least sea state 4 conditions.

(ii) Flotation tests should be investigated at the most critical rotorcraft loading condition.

(iii) Flotation time and trim requirements should be evaluated with a simulated, ruptured deflation of the most critical float compartment. Flotation characteristics should be satisfactory in this degraded mode to at least sea state 2 conditions.

(iv) A sea anchor or similar device should not be used when demonstrating compliance with the flotation and trim requirements but may be used to assist in the deployment of liferafts. If the basic flotation system has demonstrated compliance with the minimum flotation and trim requirements, credit for a sea anchor or similar device to achieve stability in more severe water conditions (sea state, etc.) may be allowed if the device can be automatically, remotely, or easily deployed by the minimum flightcrew.

(v) Probable rotorcraft door/window open or closed configurations and probable damage to the airframe/hull (i.e., failure of doors, windows, skin, etc.) should be considered when demonstrating compliance with the flotation and trim requirements.

(4) Float System Reliability. Reliability should be considered in the basic design to assure approximately equal inflation of the floats to preclude excessive yaw, roll, or pitch in flight or in the water.

(i) Maintenance procedures should not degrade the flotation system (e.g., introducing contaminants which could affect normal operation, etc.).

(ii) The flotation system design should preclude inadvertent damage due to normal personnel traffic flow and excessive wear and tear. Protection covers should be evaluated for function and reliability.

(5) Occupant Egress and Survival. The ability of the occupants to deploy liferafts, egress the rotorcraft, and board the liferafts should be evaluated. For configurations which are considered to have critical occupant egress capabilities due to liferaft locations and/or ditching emergency exit locations and floats proximity, an actual demonstration of egress may be required. When a demonstration is required, it may be conducted on a full-scale rotorcraft actually immersed in a calm body of water or using any other rig/ground test facility shown to be representative. The demonstration should show that floats do not impede a satisfactory evacuation.

(6) Rotorcraft Flight Manual. The Rotorcraft Flight Manual is an important element in the approval cycle of the rotorcraft for ditching. The material related to

ditching may be presented in the form of a supplement or a revision to the basic manual. This material should include:

(i) The information pertinent to the limitations applicable to the ditching approval. If the ditching approval is obtained in a segmented fashion (i.e., one applicant performing the aircraft equipment installation and operations portion and another designing and substantiating the liferaft/lifevest and ditching safety equipment installations and deployment facilities), the RFM limitations should state “Not Approved for Ditching” until all segments are completed. The requirements for a complete ditching approval not yet completed should be identified in the “Limitations” section.

(ii) Procedures and limitations for flotation device inflation.

(iii) Recommended rotorcraft water entry attitude, speed, and wave position.

(iv) Procedures for use of emergency ditching equipment.

(v) Ditching egress and raft entry procedures.

FIGURE AC 29.801-1

SEA STATE CODE

(WORLD METEOROLOGICAL ORGANIZATION)

Sea State Code	Description of Sea	Significant Wave Height Meters	Significant Wave Height Feet	Wind Speed Knots
0	Calm (Glassy)	0	0	0-3
1	Calm (Rippled)	0 to 0.1	0 to 1/3	4-6
2	Smooth (Wavelets)	0.1 to 0.5	1/3 to 1 2/3	7-10
3	Slight	0.5 to 1.25	1 2/3 to 4	11-16
4	Moderate	1.25 to 2.5	4 to 8	17-21
5	Rough	2.5 to 4	8 to 13	22-29
6	Very Rough	4 to 6	13 to 20	28-47
7	High	6 to 9	20 to 30	48-55
8	Very High	9 to 14	30 to 45	56-63
9	Phenomenal	Over 14	Over 45	64-118

NOTES: (1) The Significant Wave Height is defined as the average value of the height (vertical distance between trough and crest) of the largest one-third of the waves present.

(2) Maximum Wave Height is usually taken to be 1.6 x Significant Wave Height; e.g., Significant Wave Height or 6 meters gives Maximum Wave Height of 9.6 meters.

(3) Winds speeds were obtained from Appendix R of the “American Practical Navigator” by Nathaniel Bowditch, LL.D.; Published by the U.S. Naval Oceanographic Office, 1966.

AC 29.803. § 29.803 (Amendment 29-3) EMERGENCY EVACUATION.

a. Explanation. The regulation specifies that "means for rapid evacuation in a crash landing" be provided considering the landing gear extended or retracted, and "considering the possibility of fire." Any external exits, whether normal entrance doors or service doors, can be considered as emergency exits if the requirements of §§ 29.805 through 29.815 are met. "Limited amphibian rotorcraft" emergency exits are required to be designed for probable maximum local water pressure (or shown to have nonhazardous failure characteristics) and to have a specified number of exits above the water level. Limited amphibian rotorcraft are approved under the provisions of §§ 29.519 and 29.755(b). Sections 29.801 and 29.807(d) refer to similar standards that pertain to "rotorcraft ditching configurations."

b. Procedures. Exits, arrangement, markings, access, and aisle widths as specified in § 29.805 through 29.815 are to be provided. Recent rotorcraft designs have been approved under the "ditching" standards of § 29.801. Previous "limited amphibian rotorcraft" were designed to the same standards.

AC 29.803A. § 29.803 (Amendment 29-30) EMERGENCY EVACUATION.

a. Explanation.

(1) Amendment 29-30 removed § 29.803(c) which concerned limited amphibians, now obsolete with adoption of § 29.801 ditching standards, and added § 29.803(d) for evacuation criteria of certain rotorcraft designs. Part 29, Appendix D evacuation procedures was adopted concurrently. In addition, newly adopted § 29.803(e) allows use of analysis and tests for compliance with the standard.

(2) This amendment adds explicit demonstration requirements even for certain smaller but "dense" interior arrangements as stated in § 29.803(d)(2).

(3) The 90-second duration for an evacuation demonstration through all exits on one side of the rotorcraft is a primary addition to the standard.

b. Procedures. All of the policy material pertaining to this section remains in effect with the following additions:

(1) For rotorcraft with a seating capacity of more than 44 passengers, conduct an emergency evacuation in accordance with the provisions of Part 29, Appendix D.

(2) For certain smaller rotorcraft with a van or limousine-type "dense" interior as defined in § 29.803(d)(2), conduct an emergency evacuation in accordance with the provisions of Part 29, Appendix D. The rotorcraft should meet all three requirements before a demonstration is specifically required.

(3) Part 29, Appendix D contains procedures. Safety equipment for alleviating "ground" injuries is contained in paragraph (c) of the Appendix.

(4) A combination of analysis and tests may be used in lieu of test only. A combination of tests and analysis is particularly intended to evaluate emergency evacuations from rotorcraft from 10 to 44 passengers with van or limousine-type interiors. Test other than full-scale evacuation tests may be used in conjunction with analyses to evaluate specific design features such as folding seat backs which affect only one or two passengers. That is, sections of an interior may be used to evaluate a feature and its effects on prompt evacuation of the rotorcraft.

AC 29.805. § 29.805 (Amendment 29-3) FLIGHTCREW EMERGENCY EXITS.

a. Explanation. Flightcrew emergency exits are required when passenger exits are not convenient. The placement of litters, cargo, or bulkheads may prevent passenger exits from being convenient to the flightcrew. Flightcrew exits, if required, are to be of sufficient size and located on both sides of the rotorcraft (or one top hatch) to "allow rapid evacuation of the flightcrew." A test or tests are required.

b. Procedures. Flightcrew emergency exits, if required, may consist of one overhead hatch or two side exits (one on either side). The size is not explicitly defined except that it be "of sufficient size . . . to allow rapid evacuation of the flightcrew." The ability for "rapid evacuation" should be demonstrated by test. For side exits located immediately adjacent to the crew seat and exceeding Type IV exits (§ 29.807) in size, the test demonstration can be accomplished by normal use and evaluation of the exits by the FAA/AUTHORITY crew during Type Inspection Authorization (TIA) testing. For any overhead exit or side of fuselage exits not meeting Type IV dimensions, a special demonstration test should be accomplished. This demonstration should show that 2.5 percentile to 97.5 percentile men could egress rapidly through the crew exit(s), i.e., men 5 feet 5 inches to 6 feet 2 inches in height and up to 210 pounds in weight.

AC 29.805A. § 29.805 (Amendment 29-30) FLIGHTCREW EMERGENCY EXITS.

a. Explanation. Amendment 29-30 adds a new paragraph § 29.805(c) which requires that water or flotation devices not obstruct the flight crew emergency exits after a ditching. Test, demonstration, or analysis is required for substantiation.

b. Procedures.

(1) The tests, demonstrations, or analysis required by § 29.805(c) for flight crew exits is analogous to those of § 29.807(d)(3) except the crew exit threshold may be slightly below the water line but should not obstruct use of the exit.

(2) Tests in water (tanks or large bodies of water) or demonstrations in the laboratory may be used for compliance if the deflections of flotation devices relative to the exits are accurately or conservatively achieved.

(3) Obstructions should be identified, should be minor, and should not interfere with exit removal or opening, or with crew egress.

AC 29.807. § 29.807 (Amendment 29-12) PASSENGER EMERGENCY EXITS.

a. Explanation. The normal passenger exits (type and number in each side of fuselage) are specified as follows:

(1) For overland operations.

Passenger Seating Capacity	Emergency exits (rectangular with corner radii of width/3) for each side of the fuselage			
	Floor level			Step-up -29" Max.
	Type I 24" X 48"	Type II 20" X 44"	Type III 20" X 36"	Type IV 19" X 26"
1 through 10				1
11 through 19			1 or	2
20 through 39		1		1
40 through 59	1			1
60 through 79	1		1 or	2

(2) For overwater operations (related to ditching an optional standard).

Passenger Seating Capacity	Emergency exits (rectangular with corner radii of width/3) for each side of the fuselage	
	Threshold Above Waterline	
	Type III 20" X 36"	Type IV 19" X 26" w/step-up - 29" MAX
1 through 9		1
10 through 35	1*	
Each Additional or Partial Unit of 35	1*	

*The passenger seat-to-exit ratio may be increased by using larger exits if proven by analyses or tests.

(3) For crash rollover conditions. Sufficient top, bottom, or ends of fuselage exits are to be provided for evacuation unless the probability of the rotorcraft coming to rest on its side in a crash landing is extremely remote.

(4) Ramp exits to replace Type I or II exits are permitted.

(5) Each emergency exit must be functionally tested.

b. Procedures.

(1) The number and size of overland and overwater operation exits will be as specified. The use of oversize exits is allowed if the threshold is flat and of the specified width.

(2) The top, bottom, or end fuselage exits should be provided unless features of design are provided which prevent the rotorcraft from coming to rest on its side in a crash landing, and unless sufficient fail-safe and fatigue tests and analyses are conducted of the landing gear and support structure to show it is unlikely that the rotorcraft will come to rest on its side as a result of a single structural failure. An analysis is generally necessary to prove compliance with § 29.807(c).

(3) Ramp exits may be used in place of one Type I or one Type II exit if the required Type I or Type II exit is impractical, and if the § 29.813 exit access requirements are met by the ramp exits.

(4) Each emergency exit is to be opened from the inside and the outside as a functional test. Interior panels and seats should be installed for the exit functional tests to check for interferences and other effects. Section 29.813 pertains to access to the exits.

AC 29.807A. § 29.807 (Amendment 29-30) EMERGENCY EXITS.

a. Explanation. Amendment 29-30 added § 29.807(d)(3) which requires proof that all ditching configuration exits will be free of interference from emergency flotation devices, whether stowed or deployed (inflated). The threshold for each of these “ditching” exits should be above the water line in calm water.

b. Procedures.

(1) Test, demonstration, compliance inspection, or analysis is required to show freedom from interference from stowed and deployed emergency flotation devices. In the event an analysis is insufficient or a given design is questionable, a demonstration may be required. Such a demonstration would consist of an accurate, full-size replica (or true representation) of the rotorcraft and the flotation devices while stowed and after their deployment.

(2) The type inspection authorization may be used to perform compliance evaluation utilizing a full-scale rotorcraft in calm water. Designs may be accepted “by compliance inspection” if location of exit and flotation devices relative to each other ensures that interference is impossible. In this case, a demonstration is unnecessary.

AC 29.809. § 29.809 (Amendment 29-3) EMERGENCY EXIT ARRANGEMENT.

a. Explanation. Emergency exits are to be provided which result in an unobstructed opening to the outside. The following emergency exit requirements are the same as passenger door requirements of § 29.783 and noted for convenience.

(1) Openable from inside or outside.

(2) Simple and obvious means for opening.

(3) Means for locking.

(4) Means to prevent opening in flight inadvertently or as a result of mechanical failure.

(5) Means to minimize jamming in a minor crash landing.

NOTE: In addition the following emergency exit requirements are: (1) the means of opening may not require exceptional effort; and (2) a slide (for floor level exits) or rope must be provided as prescribed for exits whose thresholds are more than 6 feet from the ground (unless located over the wing). Sections 29.1411(c) and 29.1561 contain other standards for the descent devices.

b. Procedures. Subparagraphs 1 through 5 of the above explanation are covered in the procedure for § 29.783, paragraph AC 29.783.

(1) The effort required to open the exit can be evaluated when the tests of § 29.807(f) are conducted. If the effort required to open the exit is in the range of 40 to 50 pounds, it is recommended that a person of slight stature, such as a female in the 90 to 110 pound weight range, be used for the exit opening demonstration/test. In any case, the average load required to operate the exit release mechanism and open the exit should not exceed 50 pounds, and the maximum individual load of a test series should not exceed 55 pounds.

(2) If an approved escape slide, or its equivalent, is provided for exits more than 6 feet from the ground with the landing gear extended, it should be located near the door and conspicuously marked. Automatic inflation and deployment under emergency conditions are the preferred means of operation but are not required by § 29.809. If automatic inflation and deployment features are provided, design features should prevent inadvertent deployment if the exit is a door used for normal entry and/or service. If manual deployment methods are used, they must be simple and easily carried out by a person of slight build and strength. The slide should rapidly inflate upon deployment. See § 29.809(f) for standards concerning an escape rope.

AC 29.809A. § 29.809 (Amendment 29-30) EMERGENCY EXIT ARRANGEMENT.

a. Explanation.

(1) Amendment 29-29 added the phrase, “under the ultimate forces in § 29.783(d),” to clarify that the following inertial load factors previously stated in § 29.809 were not altered by Amendment 29-29 and that the previous design conditions still apply to § 29.809(e) exits as well as the doors:

(i) Upward - 1.5g

(ii) Forward - 4.0g

(iii) Sideward - 2.0g

(iv) Downward - 4.0g

(2) Amendment 29-30 further revised the requirements of § 29.809 by:

(i) Amending requirements of § 29.809(f) to include landing gear malfunction or failure in determining the distance from the exit to the ground. (A means is required to assist occupants in descending to the ground when that distance is more than 6 feet);

(ii) Adding specific requirements for automatic slides, automatic slide deployment (not optional), and slide qualification in a new § 29.809(g);

(iii) Allowing relaxation in § 29.809(h) such that a rope or other assist means may be used rather than a slide for rotorcraft having 30 or fewer passenger seats provided an evacuation demonstration is successfully accomplished; and,

(iv) Moving but not changing the egress rope requirements formerly in § 29.809(f) to a new § 29.809(i).

b. Procedures.

(1) The procedures of paragraph AC 29.809 continue to apply except compliance should consider landing gear collapse, breaking, or not extending as well as slide deployment and proper inflation in 25 knot winds.

(2) Automatic deployment of slides is now a requirement, not an option.

(3) Procedures for slide qualification tests are explicitly provided in § 29.809(g)(5).

AC 29.811. § 29.811 (Amendment 29-24) EMERGENCY EXIT MARKING.

a. Explanation.

(1) This regulation covers both the marking and exit interior illumination by emergency lighting prior to Amendment 29-24.

(2) With adoption of Amendment 29-24, the interior emergency lighting standards were moved to § 29.812, and exterior emergency lighting standards were added. However, the standards for emergency lighting in § 29.812 apply to transport Category A rotorcraft. Transport Category B rotorcraft shall have the “emergency” lighting required in § 29.811(d). General interior lighting standards are no longer specified in § 29.811.

(3) Locating and marking signs are specified for each emergency exit with the following features:

(i) Locating signs and marking signs are to--

(A) Be recognizable from a distance equal to the width of the cabin;

(B) Have 1-inch white letters on a 2-inch red background (colors may be reversed); and

(C) Be self- or electrically illuminated to a minimum brightness of 160 microlamberts.

(ii) Locating signs visible to occupants approaching along the main aisle are required for each exit.

(A) The sign is required next to or above the aisle for floor level exits.

(B) Bulkheads or dividers obscuring exits must have exit locating signs except as stated.

(4) Exit operating or release handle instructions are to be--

(i) Readable from a distance of 30 inches; and

(ii) Supplemented with a red arrow and sign (for Type I or Type II exits with a handle having rotary motion) with the following features provided:

(A) A red arrow with a ¾-inch shaft, a head of twice the shaft width, and a 70° arc at 75 percent of handle length.

(B) The word “open” in red letters 1 inch high near the head of the arrow.

(5) Emergency lighting.

(i) Prior to Amendment 29-24, an independent source of light, as prescribed, shall be installed in transport Category A or B rotorcraft to:

(A) Illuminate marking and locating signs;

(B) Provide general lighting of 0.05 foot-candles at 40-inch intervals at armrest height along the main aisle; and

(C) Operate manually and automatically in a crash landing and when the normal electrical power is interrupted.

(ii) Amendment 29-24 requires for transport Category B rotorcraft either self- or electrically illuminated exit marking and locating signs. General lighting standards are not specified. See § 29.812 for transport Category A standards.

(6) External exit markings are required which include a 2-wide band around the exit, identification, and instructions for opening. The external markings are to have a reflectance difference of 30 percent from the fuselage surface finish.

(7) Emergency exits signs may read simply “EXIT.”

(8) Excess exits should meet all of the “EXIT” standards or should not be identified as an exit.

b. Procedures.

(1) Emergency exit locating signs may be located to the side of the aisle for small fuselage heights, rather than over the aisle where they may present a hazard to the occupant’s head and possibly impede egress. For small passenger cabins one self-illuminated sign stating “EXIT” may be used as both the locating and marking sign for an individual exit on one side of the cabin (operating instructions will, of course, still be required). If one “EXIT” sign is used to both locate and mark the exit, it should be attached to the fuselage above the exit and not to the exit itself. If it is attached to the exit itself and the exit is discarded from the cabin after opening, the locating function of the exit sign is lost when the exit is removed. That is, there is no sign to locate the exit for passengers other than for the one who discarded the exit. The exit locating sign is a necessity to direct all occupants.

(2) Operating instructions should be provided as specified. They should be kept short but clear; e.g., “rotate handle,” “push,” “pull,” etc.

(3) Lighting should be provided as specified to illuminate the cabin for egress paths and to supplement lighting of the exit operating instructions signs.

(4) The reflectance of external exit markings can be checked by appropriate electro-optical instrumentation or by use of photometer card sets. AC 20-47, Exterior Colored Band Around Exits on Transport Airplanes, provides information for complying with identical standards contained in § 25.811. These are also acceptable for § 29.811. The Munsell Color Company, 2441 North Calvert Street, Baltimore, Maryland 21218, provides a set of cards which includes shades of most commonly used colors.

AC 29.811A. § 29.811 (Amendment 29-31) EMERGENCY EXIT MARKING.

a. Explanation.

(1) Amendment 29-30 changes § 29.811(f)(1) to allow marking or outlining the handles, release devices, levers, etc., of passenger emergency exits which are "normally used doors," rather than outline the entire door of smaller transport rotorcraft. If an exit, other than a normally used door, such as a hatch, window, etc., is approved, that exit would be marked around the perimeter as described.

(2) Amendment 29-31 added two requirements to § 29.811(a):

(i) A clarification that emergency exit markings should be conspicuously marked for egress in darkness as well as in daylight.

(ii) A requirement for visibility of emergency exit markings when the "rotorcraft is capsized (in water) and the cabin is submerged. This standard applies to rotorcraft configurations complying with § 29.801.

b. Procedures. The procedures of paragraph AC 29.811 are still applicable plus:

(1) The release device, handle, etc., of the normally used door(s) may be separate from the normally used handle of the door (such as a release system lever for sliding door rollers). To preclude jamming a sliding door, which is also an exit, in an emergency landing impact, the door should be released from the track. An emergency release handle for releasing door rollers may be used to allow the exit door to be "pushed off" the track. For smaller rotorcraft, such a release lever should comply with the necessary operating procedures and exit markings but should use a distinct, separate 2-inch wide band around the release lever per § 29.811(f)(1). That is, a distinct "band" is necessary to comply rather than a solid block of color around the release lever. Large rotorcraft should have exits marked with a distinct 2-inch band around the exit perimeter as stated in subparagraphs § 29.811(f)(1). Refer to paragraph AC 29.811 for color contrast.

(2) The interior compliance checklist should report that emergency exit markings have been evaluated by "interior compliance inspections" conducted in darkness as well as daylight, and visibility of interior emergency exit markings should be checked under submerged cabin conditions or alternate/equivalent means for those

rotorcraft configurations equipped for over-water flights that are approved under § 29.801.

AC 29.812. § 29.812 (Amendment 29-24) EMERGENCY LIGHTING.

a. Explanation. Section 29.812 was added by Amendment 24. This change unified the requirements for an emergency lighting system into a single paragraph and required these systems only for Category A rotorcraft. The purpose of this change was to afford passengers flying in Transport Category A rotorcraft the same level of safety in an emergency evacuation at night as passengers flying in transport category airplanes.

b. Procedures. This paragraph is quite similar to the emergency lighting system required for Part 25 airplanes. The exception is there are no requirements in this paragraph for floor proximity emergency escape path markings. The following items should be considered in the design of emergency lighting systems:

(1) There is a requirement for two controls of the system. One of these controls is located in the cabin, where it can be operated by a flight crew member or a passenger. The other control is located in the cockpit. These switches must have an “ON,” “OFF,” and “ARMED” position. These switches should operate independently of each other, and any other systems in the rotorcraft. The emergency lights must become lighted or remain lighted if the switch is either turned on, or the switch is in the armed position and there is an interruption of the rotorcraft electrical power supply. Inertia switches should not be used to satisfy this requirement.

(2) Sharing of light bulbs with the normal cabin lighting is acceptable provided there is sufficient isolation of the emergency lighting system from the normal cabin lighting circuits. No single failure of the shared portion should render the emergency lighting system inoperative.

(3) The luminosity tests of the emergency lighting system should be accomplished with the emergency exits open.

AC 29.813. § 29.813 (Amendment 29-12) EMERGENCY EXIT ACCESS.

a. Explanation. Paragraph (a) of § 29.813 prescribes design details for passageways, both between passenger compartments and for access to Type I and II emergency exits, should they be provided. Such passageways are not made mandatory by § 29.813 although most larger rotorcraft have used them. Some utility or “wide-body” rotorcraft may have open areas between the crew area (pilots) and passenger area (cabin). These configurations may have lateral seating arrangements providing access to emergency exits of Type I or II size, even though they may not be required by § 29.807(b). These designs may not have a main aisle.

(1) Paragraph (c) of this standard concerns access to Type III and Type IV exits. Although “passageways” with explicit requirements are not required for Type III

and Type IV exits, "access from each aisle to each Type III and Type IV exit" is required.

(2) For exits whose thresholds are more than 6 feet above the ground, additional space adjacent to the exit is required to allow room for a crewmember to assist passengers with the descent device such as an escape slide or rope noted in § 29.809(f).

(3) In addition to requiring passageways and crewmember space adjacent to exits over 6 feet above the ground, this standard does not allow obstructions in the projected opening of Type III or Type IV emergency exits for one seat width from the exit, except as noted. For passenger seating configurations of 19 or less, minor obstructions into the projection of the exit are allowed only if "compensating factors to maintain the effectiveness of the exit" are provided.

b. Procedures.

(1) The provision for unobstructed passageways, at least 20 inches wide as specified, is straightforward for medium or large cabins with a main aisle and a typical rectangular floor plan. Care should be taken to assure that seats (with lateral or fore-and-aft movement) or galleys (with doors or drawers) are not installed so that they can encroach upon the required passageway. Design features such as stops in seat tracks, seat back mechanisms, stops in galley door (or drawer) mechanisms may be required to assure that unobstructed passageways are provided.

(2) The requirement (added by Amendment 29-12) that "access from each aisle to each Type III and Type IV exit" be provided may add design features to the interior of many typical compact interiors of medium-size rotorcraft. Rotorcraft with emergency exits located in either hinged or sliding doors and having passenger area encroachment or protrusions by compartments for fuel cells, gear boxes, etc., may require special design features to assure that passengers seated to one side or one area of the cabin have "access" to all Type III or Type IV exits on the same or other side of the rotorcraft. The cabin must not be separated into compartments or partitioned. For example, fold down seat back mechanisms may be required for compact cabin configurations having only lateral aisles rather than longitudinal aisles and having Type III or Type IV exits located on each side of the cabin at the end of the lateral seat row or rows.

(3) The space adjacent to an exit that requires a crewmember to assist passengers with descent devices must be large enough to prevent the crewmember from becoming an obstruction in access to the exit. Twenty inches of access must be maintained.

(4) Minor obstructions are allowed in the projected opening of Type III or Type IV exits (for 19 or less passenger seat configurations) if "compensating factors to maintain the effectiveness of the exit" are provided. Compensating factors may include

such design features as larger than required exit opening, additional exits beyond the minimum number required, or steps or other assist features which facilitate egress through the exit with the obstruction. Test or analysis may be required to prove the effectiveness of the compensating feature.

AC 29.815. § 29.815 (Amendment 29-12) MAIN AISLE WIDTH.

a. Explanation. Main aisle widths are specified in the following table:

Passenger seating capacity	Minimum main passenger aisle width	
	Less than 25 inches from floor	25 inches and more from floor
	Inches	Inches
10 or less----------	12*	15
11 through 19----------	12	20
20 or more----------	15	20

*A narrower width not less than 9 inches may be approved when substantiated by tests found necessary by the Administrator.

b. Procedures.

(1) Provide the specified aisle minimum width where a longitudinal main aisle is provided in the type design.

(2) Historically, certain rotorcraft with short, wide cabins were initially designed without a longitudinal main aisle for military and cargo use, but were later fitted and approved for civil passenger configuration. These craft generally have 19 or less passenger seats and have either (1) outboard facing passenger seats, (2) a limited number of lateral rows with fold down seats/seat backs, or (3) a combination of lateral and longitudinal rows with and without main aisles to facilitate entrance and egress.

AC 29.831. § 29.831 VENTILATION.

a. Explanation.

(1) This rule specifies minimum ventilation requirements for each passenger and crew compartment. The minimum requirement for fresh air in the crew compartment is that amount that will allow the crew to accomplish their duties without undue discomfort or fatigue which shall be at least 10 ft^3/m per crewmember. The passenger and crew compartments are also required to be free from harmful or hazardous concentrations of gases or vapors. Specifically for carbon monoxide, the concentration may not exceed 1 part in 20,000 parts of air during forward flight. Failure conditions must also be considered when applying this rule.

(2) This rule becomes more significant when engine bleed air is used for conditioning of the passenger and crew compartments' air. Certain data are necessary in order to properly analyze the bleed air provided under normal and malfunction conditions. The airframe manufacturer can normally look to the engine manufacturer for a specification of the maximum amount of air that can be extracted and the temperature of the extracted air. The engine manufacturer also normally provides a failure analysis that identifies ways the bleed air can be contaminated and the associated oil flow rates under each failure condition. The oil manufacturers are in a position to provide information regarding breakdown of the oil under different temperature conditions and the impact of that breakdown on the quality of the air being provided to the passenger and crew compartments.

b. Procedures.

(1) The passenger and crew compartments should be initially analyzed to ensure that at least 10 ft^3/m per crewmember of ventilation air is being provided. The emphasis has been placed on forward flight and, "air scoops" have been one way of showing compliance with this rule. Most installations also include blowers; however, they are normally provided primarily for defogging the windshields, and a secondary benefit is some circulation during ground or hover operation. In addition, the flight test crew should be asked to do a qualitative evaluation to ensure the amount of ventilation air actually provided meets the requirement for the crew to be able to accomplish their duties without undue discomfort or fatigue. In addition, the ventilation devices provided should not excessively increase the noise level in the cockpit. Compliance with the first requirement of § 29.831(a) can therefore be shown by an analysis showing the existence of at least 10 ft^3/m per crewmember, and a report from the flight test crew indicating that the amount actually provided is satisfactory.

(2) The passenger and crew compartment should be monitored under normal operating conditions for the presence of carbon monoxide. A carbon monoxide test kit is normally used for this evaluation. Air is monitored around outlets and different combinations of windows closed/open, heat off/on, air-conditioner off/on, etc., are checked to ensure all conditions are evaluated.

(3) When engine bleed air is used to condition the passenger and crew compartments' air, it should be initially substantiated that under normal operation, the amount of air being extracted does not exceed the limit established by the engine manufacturer. To accomplish this, determine the flight condition that will give the maximum bleed air flow through the flow limiter (venturi). The flow calculations should use this maximum flow condition and should also be made using the maximum tolerance diameter of the venturi throat.

(4) The engine bleed air should also be evaluated under malfunction conditions to determine a worst-case air contamination condition. (A typical worst-case malfunction is for an oil seal to fail in the engine that allows the engine oil supply to be introduced into the airflow.) With information regarding the contaminant, flow rate calculations can be made to predict the contamination levels that will be reached in the passenger and crew compartments and also the associated time duration of passenger and crew exposure. The severity of the exposure to the contaminated air is related to the temperature of the oil when it is introduced into the airflow. For example, synthetic base oils manufactured to MIL-L-7808 or MIL-L-23699 begin to break down into toxic components when the temperature exceeds 300° C (572° F). The oil manufacturers have evaluated this problem and should be in a position to provide data regarding the amount and type of toxic components to be expected, and the effect of introducing those components into the passenger and crew compartments. Therefore, from information supplied by the engine manufacturer, the worst-case air contamination condition can be calculated, and this can be compared with results of the oil manufacturers' tests to determine if the concentrations are harmful or hazardous.

AC 29.833. <u>§ 29.833 HEATERS</u>.

a. <u>Explanation</u>. This standard provides that each combustion heater must be approved. The standard contains no provisions regarding functioning of the system, environmental considerations, or malfunctions, therefore, the provisions of §§ 29.1301 and 29.1309 should be used to evaluate those aspects of an installation. The provisions of § 29.831, ventilation, should also be considered, as well as § 29.859, concerning combustion heater fire protection.

b. <u>Procedures</u>.

(1) Technical Standard Order, TSO-C20, was issued June 15, 1949, and amended on April 16, 1951, and concerns Combustion Heaters. If a heater chosen for installation has been qualified to the provisions of TSO-C20, it is considered to be approved. If a unit is not qualified to TSO-C20, a qualification program for the heater itself should be established with FAA/AUTHORITY certification engineers participating in the program as early as possible. The program should be based on the provisions of the TSO.

(2) The TSO refers to the SAE Aeronautical Standard, AS 143B, which specifies certain additional devices, design features, air supply considerations, performance tests, safety controls, environmental considerations, and so forth. Consideration of all of the provisions of the aeronautical standard should result in an approved unit; however, it will not necessarily result in a satisfactory installation. For environmental considerations, it should be possible to specify an environmental spectrum more suitable to rotorcraft by referencing the latest version of Document No. RTCA/DO-160, Environmental Conditions and Test Procedures for Airborne Equipment, rather than AS 143B. Other specifications may also be satisfactory.

(3) The installation evaluation should consider functioning of the system based on the provisions of § 29.1301. Section 29.1309(a) is the regulatory basis for consideration of environmental conditions, and the expected environmental conditions resulting from the installation should be compared to those specified in the TSO. If the two are not compatible, additional environmental considerations are appropriate. The provisions of § 29.1309(b) should be used to evaluate the possible malfunctions of the installed system, and this evaluation should be documented in a fault analysis. The provisions of § 29.831 should be considered since certain standards of ventilation air quality under normal and malfunction conditions are specified. Additionally the provisions of § 29.859 should also be considered.

SUBPART D - DESIGN AND CONSTRUCTION

FIRE PROTECTION

AC 29.851. § 29.851 FIRE EXTINGUISHERS.

a. Explanation.

(1) The standard concerns objective performance criteria for both handheld fire extinguishers in the crew and passenger compartments and built-in fire extinguisher systems if the system is required.

(2) Section 29.853(e) and (f) dictate the quantity and general location of the handheld fire extinguishers.

(3) Section 29.855(d) contains standards for cargo/baggage compartments.

(4) Sections 29.1541 and 29.1561 concern durable and conspicuous markings and placards for location and operation or use of the equipment.

(5) The rotorcraft flight manual should contain appropriate information as well.

(6) Advisory Circular 20-42C, Handheld Fire Extinguishers for use in Aircraft, provides an acceptable means of compliance with the standard.

b. Procedures.

(1) Advisory Circular 20-42C provides valuable information to select the type and size of the handheld extinguishers.

(2) The type design data shall contain appropriate information. One location should be used (recommended) for the crew compartment. Several locations may be selected to allow for evaluation and approval of several extinguishers and their locations in the passenger compartment.

(3) During a compliance inspection of a complete interior, the installation of required and optional extinguishers shall be checked for compliance.

(4) Whenever an extinguisher is installed, even though not required by § 29.853(f), it shall also comply with the standards.

AC 29.853. § 29.853 (Amendment 29-23) COMPARTMENT INTERIORS.

a. Explanation.

(1) Interior materials and components, windows, linings, etc., must meet certain flammability standards as set forth in Amendment 29-17. The rule refers to Part 25, Appendix F (Amendment 25-32), for procedures. Flight Standards Service Release No. 453 contained acceptable flammability standards for specified interior materials prior to adoption of Amendment 29-17.

(2) Smoking may be permitted with use of self-contained removable ashtrays as specified in § 29.853(c).

(3) Fire resistant waste containers may be used as specified.

(4) Hand fire extinguishers are required for flight crewmembers and passengers as specified. Section 29.851 and AC 20-42C, Hand Fire Extinguishers for use in Aircraft, dated March 7, 1984, contain standards for the extinguishers. Section 29.1561(b) concerns identification and operating information signs for the safety equipment, and § 29.1411 concerns accessibility of the equipment.

(5) Amendment 29-23 adopted new flammability requirements for passenger seat and seat back cushions. Section 29.853(b) was added to require tests of “fire blocking” features of the cushions including upholstery materials. The rule refers to Part II, Appendix F, FAR Part 25 or an equivalent for the test procedures and test specimen requirements. Appendix F to Part 25, effective November 26, 1984, is the correct reference.

b. Procedures.

(1) With adoption of Amendment 29-17, materials subject to the flammability standards were significantly expanded. Acrylic windows and signs and transparencies were, for example, included. The rules list the materials and components subject to the flammability standards and refer to Appendix F of FAR Part 25 for the test procedures. Specific burn chambers are also required for the tests. See paragraph b(5) below for flame application time and reference to Appendix F.

(2) A placard prohibiting smoking at all times may be used if ashtrays are not provided. If ashtrays are provided, the installation must have an inner fire resistant liner to close off the ashtray cavity or receptacle when the ashtray is removed. An illuminated sign or signs must be used if prescribed. Each crewmember must be able to control illumination of the sign.

(3) Fire resistant waste containers must have self-closing lids, such as a spring-loaded lid. If a removable container is installed in the receptacle, it must meet the same fire resistant standards as the receptacle. The receptacle must not have any

openings outside the galley or an opening into the rotorcraft structure. An opening may allow accumulation of trash and may allow flames and smoke to go throughout the rotorcraft in case of fire.

(4) A fire extinguisher must be adjacent to crew seats and must be readily accessible to the crew (§§ 29.1411 and 29.853(e)). The extinguisher should be accessible to the crewmember while he is seated. Fire extinguishers are also required in the passenger compartment for seven or more passengers. If one passenger is allowed in the left forward crew seat and six passengers are allowed in the passenger compartment, an extinguisher is not required for the passenger compartment. The extinguisher specified in § 29.853(e) should be located, whenever possible, so that it is visible and convenient to the passengers. If the passenger compartment extinguisher or extinguishers (§ 29.853(f)) are not visible to the passengers when seated, locating signs will be required. See § 29.1561(b).

(5) FAR Part 25, Appendix F, Part 1, established in Amendment 25-32 (effective May 1, 1972) contains flammability test procedures that must be used when complying with § 29.853 of Amendment 29-17. Appendix F refers to sections of FAR Part 25 that do not coincide with sections of the FAR Part 29. To preclude confusion the following statements should be used to develop company test procedures that will provide for compliance with § 29.853.

(i) Section 29.853(a)(1) materials are tested (vertically) to procedures in Appendix F, paragraph (d), and the flame must be applied for 60 seconds and then may be removed.

(ii) Section 29.853(a)(2) materials are tested (vertically) to procedures in Appendix F, paragraph (d), and the flame must be applied for 12 seconds and then may be removed.

(iii) Section 29.853(a)(3) and (4) materials are tested (horizontally) to procedures in Appendix F, paragraph (e), and the flame must be applied for 15 seconds and then may be removed.

(iv) Appendix F, paragraph (h) contains criteria for burn length measurement.

(v) Appendix F, paragraph (f) contains a procedure that does not apply to FAR Part 29, certification rules through Amendment 29-19.

(vi) Appendix F, paragraphs (a), (b), and (c) contain appropriate test procedures. It is noted § 29.853(a)(4) materials are equivalent to the materials specified in § 25.853(b-3).

(vii) Electrical wire and cable materials are tested in accordance with FAR 25, Appendix F, paragraph (g). (Refer to §§ 29.1351(d)(3), 29.831, and 29.863, and possibly special conditions for some rotorcraft.)

(6) AC 23-2, Flammability Tests, dated August 20, 1984, pertains to small airplanes and their materials. This AC includes information from Flight Standards Service Release No. 453 and may be useful in preparing a test proposal for flash-resistant, flame-resistant, fire-resistant, and fireproof materials. FAR Part 1 contains a further definition of these four terms.

(7) The “fire blocking layer” features of the seat cushions must be tested as prescribed in Appendix F, Part II, Part 25. Specific test equipment and devices are prescribed. AC No. 25.853-1, Flammability Requirements for Aircraft Seat Cushions, dated September 17, 1986, provides guidance material for demonstrating compliance with the seat cushion flammability standards.

AC 29.855. § 29.855 (Amendment 29-24) CARGO AND BAGGAGE COMPARTMENTS.

a. Explanation. This section contains standards for accessible and inaccessible compartments. The rotorcraft should be able to contain a fire until it is detected and extinguished or until a safe landing and evacuation are accomplished. The cabin may be used as a cargo compartment for rotorcraft used for carriage of cargo only. Protective breathing equipment is required (§ 29.1439) for an appropriate crewmember or crewmembers when a compartment is accessible in flight. The rule does not provide for classification of cargo compartments. Reference is made to § 29.853 for flammability standards of certain materials.

(1) The compartment must be constructed of, or lined with, materials that are at least fire resistant. Accessible and inaccessible compartments must comply.

(2) Inaccessible compartments must be sealed and designed to completely contain a compartment fire or to allow detection as stated in § 29.855(c) and (d).

(3) Inaccessible compartments must have a detector unless the compartment can contain a fire as stated. Accessible compartments must have a detector or be designed to ensure detection by a crewmember while at his station as stated in § 29.855(d). Flight evaluations assure that an inaccessible compartment is sealed and will contain smoke, gases, etc., as stated.

(4) The cabin area may be used for carriage of cargo only as stated in § 29.855(e). Crew emergency exit must be accessible; sources of heat protected, and air flow must be stopped.

(5) Section 29.853 of Amendment 29-17 provides flammability standards for cargo compartment liners, covers, cargo, baggage tiedown equipment, etc., as stated in

that section. This section pertains to compartments used by passengers or crew. Section 29.855(a) requires a fire resistant liner and is the overriding requirement.

b. Procedures. It is intended to provide for adequate protection of the crew and passengers in the event of an in-flight fire. For Category B rotorcraft, one objective as stated in § 29.861 is that the rotorcraft should be protected for at least 5 minutes (after recognition) in the event of a fire. The correct time interval to consider for Category A or B rotorcraft may be derived from the policy stated in paragraph AC 29.861, § 29.861.

(1) An aluminum inner skin, fire resistant liner, or closure of the compartment, whether the compartment is accessible or inaccessible is required by the rule. In the event of a compartment fire, the inner skin or liner will protect the load-carrying structure from direct flame impingement until the fire is detected and appropriate action is taken. Flight Standards Service Release No. 453 provides the standards for fire resistant materials.

(2) Inaccessible compartments, in addition to having the inner skin or liner, must be sealed to prevent entry of air and thereby contain a fire in the compartment. Flight tests are generally necessary to assure the compartment, primarily doors, do not leak in flight. Sensitive pressure measuring equipment (range of 10 inches of H_2O) may be used to prove the compartment is sealed by finding no appreciable change in compartment pressure during ground and flight conditions. The appropriate tests should also be conducted to determine that no accumulation of harmful quantities of smoke, flame , extinguishing agents, or other noxious gases occur in any crew or passenger compartment. For compartments having a volume not in excess of 500 cubic feet, an airflow of not more than 1,500 cubic feet per hour is considered acceptable. For larger compartments lesser airflow may be applicable to assure fires are contained.

(3) Inaccessible compartments may have a detector as prescribed. A smoke detector is preferable in place of a fire detector. The instrument panel will have an illuminated red indicator, such as baggage/cargo, as a warning signal for the flightcrew. Although no specific standards for the detectors are contained in FAR Part 29, the following standards are recommended. The detection system should be designed to provide a visual indication to the flightcrew within one minute after start of a fire or within 5 minutes after smoke initiation appropriate to the detector used (30 seconds is allowed under TSO C 1b, for smoke detector actuation). There should be a means to allow the crew to check in flight the functioning of each fire or smoke detector circuit. For large compartments, the effectiveness of the detection system should be proven and the detection system should be capable of detecting a fire at a temperature significantly below the temperature at which the structural integrity of the rotorcraft would be substantially decreased.

(4) Accessible compartments must have a detector or detectors unless a crewmember can detect a fire while at his station. Flight evaluations are necessary to assure accessible compartments may be isolated from crew and passenger

compartments as stated. The rule envisaged separate compartments for passengers or crew and cargo/baggage.

(5) Insulation blankets, cargo covers, cargo and baggage tie-down equipment, including containers, bins and pallets used in accessible and inaccessible compartments should meet the flammability standards specified in § 29.853 for the same counterparts noted therein.

AC 29.855A. § 29.855 (Amendment 29-30) CARGO AND BAGGAGE COMPARTMENTS.

a. Explanation. Amendment 29-30 relaxes previous requirements by allowing small, accessible cargo and baggage compartments to be lined with passenger compartment materials rather than fire resistant materials. Materials may meet the requirements in § 29.853(a)(1), (a)(2), and (a)(3) for cargo or baggage compartments if:

(1) The presence of a compartment fire would be easily discovered by a crew member while at the crew member's station;

(2) Each part of the compartment is easily accessible in flight; or

(3) The compartment has a volume of 200 cubic feet or less.

b. Procedures. The previous procedures continue to apply to Amendment 29-30 except for allowing the use of passenger compartment materials for accessible compartments.

AC 29.859. § 29.859 (Amendment 29-2) COMBUSTION HEATER FIRE PROTECTION.

a. Explanation. This regulation ensures that onboard combustion heating systems (of all type designs) are safe during normal and survivable emergency operations. Thus as a minimum, each combustion heater design must meet the requirements of § 29.859.

b. Definitions.

(1) Backfire. An improperly timed detonation (or explosion) of a fuel mixture which results in higher than normal temperatures and pressures.

(2) Reverse flame propagation. An event that occurs when the flame from a controlled combustion process (such as a heater) goes in an abnormal path (i.e., either a reverse or different path than the intended path) as a result of a change in internal pressure or internal pressure gradient (e.g., a backfire) from a detonation or a similar event.

(3) Safe distance. A maximum flow length dimension determined from the thermodynamics of a worst-case flow reversal (backfire) and the local heater system geometry.

(4) Heater zone (or region). A geometric zone defined by the heater type, heater size, the location of heater system components, and the maximum safe distance determined under (3) above. The heater system components may affect the heater zone's size if they are closely located to the heat source. For example a heater fuel tank would not be part of the heater zone if it were located far away from the zone boundary; however, if it were adjacent or close to the boundary, it would be included in the heater zone.

(5) Fireproof. Fireproof is defined in § 1.1, "General Definitions."

(6) Severe Fire. The following thermodynamic definitions are based on AC 20-135, "Powerplant Installation and Propulsion System Component Fire Protection Test Methods, Standards and Criteria" and on the definitions in § 1.1 for fire resistant and fireproof materials. These definitions are provided for analytical purposes. A severe fire, when used with respect to fireproof materials, is one which reaches a steady state temperature of 2,000 ±150° F for at least 15 minutes. A severe fire, when used with respect to fire resistant materials, is one which reaches a steady state temperature of 2,000 ±150° F for at least 5 minutes.

(7) Hazardous accumulation of water or ice. An accumulation of water or ice that causes a device to not perform its intended function in either normal operation or a survivable emergency situation.

c. Procedures. When suitable data is available, the heating system design should be thoroughly reviewed to determine which system components and arrangements must comply with each subsection of § 29.859. The method-of-compliance relative to each subsection of § 29.859 should then be determined. Acceptable, but not the only, methods of compliance are discussed on a section-by-section basis as follows.

(1) For compliance with § 29.859(a), combustion heater designs, their installations and their heater zones must be identified and thoroughly evaluated. The most direct method of compliance for the heater, itself, is to procure units that already have internal design features that meet the relevant requirements of this section; otherwise, design features should be provided and evaluated during certification that meet these same requirements. Several combustion heaters are approved under TSO-C20. TSO-C20 provides the procurement sources and the detailed approval standards for these combustion heaters. Each heater, its installation and its heater zone should be reviewed against the criteria of §§ 29.1181 through 29.1191 and §§ 29.1195 through 29.1203 (reference paragraphs AC 29.1181 through AC 29.1191 and AC 29.1195 through AC 29.1203) to ensure compliance. Next, the fire detector installation drawings and specifications should be reviewed for each heater region. The

review should consider all reasonable hazards and failure modes of the heater and the detection system, itself. If not previously TSO approved, the detectors themselves should be evaluated and approved during the overall system certification effort. Then, the drainage and venting system for each heater installation should be reviewed to ensure that areas of fuel or fuel vapor collection are properly drained or vented. The capacity of each drain or vent should be determined and, unless impracticable, the flow capacity should be a minimum of 3-to-1 over the worst-case leakage anticipated (including the adverse effects of surface tension). Phased inspections to eliminate clogging should be considered. Finally, the drainage and ventilation systems should be reviewed to ensure that discharges do not create external hazards by entering or contacting external ignition sources such as engine inlets and hot exhausts. If an accurate determination cannot be made by a design review, ground and/or flight test work with dyed, inert fluids or vapors should be conducted to accurately display discharge patterns.

(2) For compliance with § 29.859(f), the ventilating air duct design should be reviewed to determine what ducts are routed through heater zones. Once this has been determined, each duct section running through the heater zone should be made fireproof by either using a fireproof shroud around the existing duct or by using fireproof material for the duct wall. A primary purpose of these certification measures is to eliminate any system leakage that would allow carbon monoxide (a poisonous gas) to enter occupied areas, incapacitate the crew or passengers, and cause a crash. Regardless of the method-of-compliance chosen, periodic checks should be performed during certification using carbon monoxide detection equipment to certify the leak-free integrity of the system. Several such checks should be done during flight test, especially after rigorous maneuvers, to ensure no leakage. It is also recommended that periodic checks using a carbon monoxide detector be conducted in conjunction with phased visual inspections (typically at a less frequent interval than each visual inspection) to ensure continued airworthiness. Carbon monoxide tests are reliable and quickly accomplished without any system disassembly. Continued airworthiness considerations are very important since carbon monoxide is a colorless, odorless, tasteless, poisonous gas that incapacitates an occupant without warning. Carbon monoxide's ability to incapacitate increases with altitude, and has long been suspected as a probable cause for many aircraft accidents. It is the subject of General Aviation Airworthiness Alert No. 137, dated December 1983.

(3) For compliance with § 29.859(c), any design using combustion air ducts should be reviewed to ensure that the ducts are either made from fireproof material or shrouded with a fireproof shroud over a safe distance (see definition). The safe distance should be determined analytically, by test, or a combination, if the analytical results are not conclusive. The design should be reviewed to ensure that combustion air ducts are not connected to the ventilating airstream, except when an informal equivalent safety finding can be made that shows backfires or reverse burning cannot induce flames or fumes into the ventilating airstream under any failure condition or malfunction of the heater or its associated components. Such a finding should require analysis, testing, or a combination for a proper determination. A hazard FMEA should

be conducted to ensure that no flames or fumes can be induced under any failure mode.

(4) For compliance with § 29.859(d), the design and installation of all standard heater control components, control tubing and safety controls should be reviewed to determine the probable points of water or ice accumulation (e.g., sumps, rough surfaces, joints, etc.). If a design review cannot accurately determine these accumulation points, then bench tests and flight tests should be conducted for proper determination. Once these points are identified, the ability of the effected part (or parts) to perform its intended function when water or ice has fully accumulated must be determined for both normal and survivable emergency operations. If the part (or parts) either has not lost its ability to function; has lost part of its ability to function; or has lost all of its ability to function; and the entire system's function is not impaired, then nothing further should be required. However, if the overall system's function is hazardously impaired or lost, as a result of water or ice accumulation on a part (or parts), then rectifying design improvements should be made prior to final approval. These improvements should either alter the part's environment (e.g., relocation, enclosure, insulation, etc.) or eliminate the hazardous accumulation of water or ice (e.g., provide drainage, better sealing, better location, different surface finish, etc.).

(5) For compliance with § 29.859(e), combustion heaters, if used, must have separate, independent safety controls from their standard controls (e.g., air temperature, air flow, fuel flow, etc.) which are remotely located in case of a heater fire, are operable by the crew and automatically shut off the ignition and fuel supply when a hazardous condition exists, (as defined by § 29.859(g)). These separate safety controls must comply with § 29.859(g)(1), must keep the heater off until restarted by the crew or ground maintenance, and must warn the crew when an essential heater is automatically shut down. The safety control system design should be thoroughly reviewed and tested to ensure that it complies and that no hazardous failure modes exist. An FMEA should be conducted to ensure proper compliance.

(6) For compliance with § 29.859(f), each combustion and ventilating air intake's location should be identified, reviewed, and tested to ensure that no flammable fluids or vapors can enter the heater system, ignite and create a fire. If a combustion or ventilating air intake's location is critical or questionable, it should be relocated, shielded, drained, or other equivalent means provided to eliminate the potential fire hazard. If engineering analysis and evaluation are not adequate to make an acceptable safety finding, testing using dyed, inert, leaked fluids or vapors should be conducted.

(7) For compliance with § 29.859(g), each heater exhaust system design should be reviewed, tested, or a combination to ensure proper compliance with § 29.1121 and § 29.1123 (reference paragraphs AC 29.1121 and AC 29.1123, respectively). Each exhaust shroud should be sealed to ensure that leaked flammable fluids or vapors do not contact the hot exhaust and cause a fire. The seal design should be reviewed to ensure that the sealing material is fireproof, is chemically compatible with the relevant fuels and vapors, is durable and is functionally adequate.

If the design review is not conclusive for compliance purposes, then the seal system should be bench tested under pressure while undergoing critical service loads and motions to ensure no leakage occurs. Phased seal inspections should be considered to ensure continued airworthiness. An analysis should be conducted to determine the structural effects on the exhaust system of the worse case restricted backfire (typically a shock wave analysis can be used to determine the peak internal pressure and the resultant load on the exhaust system.) If structural failure would occur, based on the analysis, either the backfire restriction should be reduced or the exhaust design should be structurally improved to eliminate the failure.

(8) For compliance with § 29.859(h), each heater's fuel system design must be reviewed to ensure compliance with the powerplant fuel system requirements of Part 29 that are necessary for safe operation to be achieved. An equivalent safety finding should be made if an application is received that requests partial compliance or non-compliance with the powerplant fuel system requirements of Part 29. The finding should ensure that the safety intent of § 29.859(j) is achieved. Analysis, engineering evaluation, testing, or a combination should be used to substantiate the heater fuel system design. Heater fuel system components that, by leakage or other failures, can induce flammable fluids or vapors into the ventilating air stream should be shrouded by drainable, fireproof shrouds.

(9) For compliance with § 29.859(i), the drain system design should be reviewed to identify parts that may be subjected to high temperature and parts that may be subjected to hazardous ice accumulation in service. The high temperature parts should be evaluated using the methods of compliance for heater exhausts (reference paragraph c(7), above and paragraph AC 29.1123). Drains that would be stopped up from ice accumulation should be protected by relocation, size, shields, heating, or a combination to ensure hazardous fluids and vapors are properly drained away.

AC 29.861. <u>§ 29.861 FIRE PROTECTION OF STRUCTURE, CONTROLS, AND OTHER PARTS</u>.

a. <u>Explanation</u>.

(1) As stated in the rule, a Category B rotorcraft must be controllable until landed and a Category A rotorcraft must be controllable and continue its flight after a powerplant fire. For Category B rotorcraft designs with Category A powerplant isolation or Category A rotorcraft, a powerplant fire in one engine compartment must not adversely affect the remaining engine or engines. (Refer to § 29.903(b)). A policy statement on powerplant fire protection provisions was contained in the following note that appeared after Civil Air Regulation (CAR), Part 7, § 7.480, Designated Fire Zones.

> NOTE: For Category B rotorcraft, the powerplant fire protection provisions are intended to ensure that the main and auxiliary rotors and controls remain operable, that the essential rotorcraft structure remains intact, and that the

passengers and crew are otherwise protected for a period of at least 5 minutes after the start of an engine fire to permit a controlled autorotative landing.

(2) To achieve the objectives of the rule, each part of the rotorcraft, as stated in the rule, must be isolated from a powerplant fire by a firewall (§ 29.1191), or for

(i) Category A, must be fireproof and must also comply with § 29.903(b).

(ii) Category B, must be protected so that they can perform their essential functions for at least 5 minutes under any foreseeable powerplant fire condition.

Review Case No. 26 pertains to CAR, Part 6, §§ 6.384 and 6.483. These rules were replaced by §§ 27.861 and 27.1191 respectively. Even though these rules pertain to normal category rotorcraft requirements, the objective statements contained in the review case pertain to the interpretation of the time interval specified by CAR, Part 7, § 7.384(b) and the note under CAR, Part 7, § 7.480 for Category B rotorcraft. These rules have been replaced by § 29.861(b) and § 29.1191, respectively. In the review case, the FAA stated, in part, that the firewall must be fireproof, support appropriate flight and landing condition loads, and prevent flame penetration when subjected to a flame of 2000° F for 15 minutes. Essential structure and controls must be protected for the duration of time appropriate to the rotorcraft operation and be able to carry loads and resist any failure that could cause hazardous loss of control when subjected to the temperature resulting from any foreseeable powerplant fire. Insufficient protection to provide enough time for a controlled landing would represent an unsafe feature or characteristic for the rotorcraft design.

(3) In addition, paragraph AC 29.1193 (§ 29.1193(c)) pertains to allowable opening in engine cowls and to fireproof skins in specified cases.

b. Procedures.

(1) If each part described in the rule is isolated completely by firewalls, compliance is obtained for Category A or B.

(2) If each part described by the rule is made of fireproof material such as steel, compliance is obtained for Category A or B.

(3) For some Category A rotorcraft, § 29.903(b) also imposes additional considerations where structure, controls, and other parts are common to the engine installation. For example, an interconnected engine mount must be fireproof and also perform its function and not affect the remaining engine in case of a powerplant fire. An evaluation should involve propulsion and airframe disciplines.

(4) For Category B certification, if each part described by the rule does not comply as stated in (1) or (2), it must be proven that it will perform its function under the

prescribed conditions. Compliance for Category B may be demonstrated by the following criteria:

(i) The parts must have a positive margin of safety for the appropriate flight and landing condition, including appropriate engine power conditions, under any foreseeable powerplant fire condition. The time interval under consideration here is the time necessary to complete an emergency descent (as described in the flight manual) and landing from the maximum operating altitude for which certification is requested. In no case is the total time interval to be less than 5 minutes.

(ii) The factors affecting the time interval should include the maximum height above the terrain, the maximum operating altitude, the flight manual recommendations for rate of descent, and a reasonable time for recognizing a powerplant fire.

(iii) The factors affecting the change in physical characteristics (strength primarily) of the parts are the temperature of the part, time interval at the elevated temperature, size, heat absorption or rejection.

(iv) The factors affecting the temperature of the part are location and distance from fire and flames, and temperature of the flames (2,000° F ±50° F should be used unless proven otherwise).

(v) The rule requires substantiations for any foreseeable powerplant fire condition. Each rotorcraft design is unique and an evaluation of each design is necessary to establish the fire and flight conditions under consideration.

(vi) A very brief and simple example of compliance noted here may be helpful. This example pertains to a single engine Category B rotorcraft with the engine mounted on top at the fuselage center line. The engine is supported by all steel tubular mounts. The fuselage panel serves as a work deck as well as a firewall. A 15-minute duration is appropriate for this design. A representative panel of the firewall (deck) skin may be subjected to the autorotation flight loads and the landing load. A flame from an appropriate size burner, measuring 2,000° ±50° F at the skin surface, should impinge on the loaded panel for 15 minutes. The panel may deform but must remain intact and sustain the appropriate load. The flame must not penetrate the panel skin.

(vii) Other rotorcraft designs may have engines located on top of the fuselage and under the main rotor. If cowls or firewalls do not isolate the rotors and essential controls, it must be determined by a rational analysis or by temperature measurement that the rotor and essential controls will perform their functions. Air flow through the rotor and factors noted in paragraphs b(4)(ii), (iii), and (iv) are important to an analysis. Compliance with § 29.1193(e)(3), fireproof skins will involve airframe and propulsion disciplines for rotorcraft designs that do not have cowls.

AC 29.861A. § 29.861 (Amendment 29-30) FIRE PROTECTION OF STRUCTURE, CONTROLS, AND OTHER PARTS.

a. Explanation.

(1) Amendment 29-30 revised the standard for Category B rotorcraft to allow use of parts made from standard fireproof materials of known acceptable dimensions in areas affected by powerplant fires without further proof of qualification. Previously the standard imposed a performance criterion for Category B applications regardless of the materials and part dimensions used.

(2) Fireproof and fire resistant are defined in FAR Part 1, § 1.1.

b. Procedures.

(1) A part with acceptable geometry that is made of steel, or another fireproof material, may be used to comply with the standard.

(2) A material system, panel, or assembly would be equivalent to steel provided it successfully completes the flammability tests described in paragraph AC 29.861b4(vi) for the appropriate time period that includes fire recognition.

AC 29.863 § 29.863 (Amendment 29-17) FLAMMABLE FLUID FIRE PROTECTION.

a. Background.

(1) The development of current § 29.863 can be traced through CAR 7.483, § 29.863 (1968), NPRM 68-18 (1968), and NPRM 75-26 (Airworthiness Review Notice November 7, 1975) and subsequent Amendment 29-17.

(2) Investigation of two accidents disclosed evidence of in-flight fires caused by leakage of flammable fluids to ignition sources. The revisions to § 29.863 adopted by Amendment 29-17 require significantly more attention to overall fire protection and prevention.

b. Explanation.

(1) Prior to Amendment 29-17, this rule only required either a means to prevent ignition of flammable fluids or vapors or a means to control any resulting fire. Isolation of flammable fluids and vapors from ignition sources by shrouding or sealing was the normal method of compliance. The revised rule further requires the assumption that these means fail or are ineffective and a fire does actually occur. Means to minimize the consequence of these fires should be provided. Specifically identified considerations should include the flammability of any combustible or absorbing materials, electrical faults, malfunction of protective devices, etc.

(2) The rule does not go so far as to require the entire rotorcraft to be a "designated fire zone." Zonal analysis of areas containing flammable fluids may be used to show compliance with the requirements of this section. The general philosophy to be adopted for demonstrating compliance with § 29.863 is illustrated in AC 29.863-1.

c. Methods of Compliance.

(1) To **minimize the probability of ignition** of fluids and vapors after single failure of a component or systems, the following methods may be used. In considering compliance, the actual extent of protective measures required may be related to the situation considering the quantity and flammability characteristics of the fluid, the fire damage tolerance of the area, and the means available to the crew to minimize hazards from a fire.

(i) Shroud and drain flammable fluid systems (including steel fluid lines), fittings, etc. and/or provide fuel and vapor seals with respect to ignition sources (electrical wiring and equipment, hot bleed air lines, etc.). Drains should be designed and positioned to enable systems to be drained until any remaining flammable fluid residue is negligible. The arrangement of drains should be such that the discharge of flammable fluid from the outlet would not constitute a fire hazard, nor could flammable fluid or vapor enter personnel compartments or other portions of the rotorcraft where a hazard of ignition may exist. If flammable fluid drains are routed through personnel compartments, means for protection from damage should be provided to prevent possible entry of flammable fluids or vapors into these compartments.

(ii) Provide other effective separation, ventilation, or overheat shutdown devices, etc., to preclude ignition. Systems using flammable fluids should be separated from potential sources of ignition, including equipment or parts with hot surface temperatures above the ignition temperature of the fluid, such that the risk of fires as a result of leakage or bursting of the fluid system is minimized.

(iii) Ensure that potential ignition sources, such as bleed air lines and electrical equipment in the areas subject to flammable fluids and vapors is either hermetically sealed, shrouded, insulated or ventilated as necessary to minimize the possibility of ignition, or has been tested and shown to be free of ignition capability. An acceptable standard for such laboratory testing is described in AC 29.1309b(1)(iv).

(iv) Place a restricting orifice in fluid pressure lines routed to instruments and transducers.

(v) Ensure flammable fluid carrying lines and drain lines are not located so as to be subject to abrasion during normal operations. Cargo compartments should be evaluated for potential line damage due to cargo movement.

(2) To minimize the hazards if ignition occurs:

(i) Provide fireproof designs, fire wall isolation, or equivalent means for critical structure, equipment and personnel areas, e.g.:

(A) Flammable fluid lines and reservoirs of flammable fluids should be adequately protected against the anticipated type and duration of fire should ignition occur. Drain lines and their fittings, the failure of which would not result in, or add to, a fire hazard need not be Fire-resistant.

(B) Where there is a risk of leaking flammable fluids re-entering the rotorcraft through joints in the cowling or other rotorcraft surfaces to areas where a hazard of ignition may exist, the ventilation of such compartments should, where practical, be arranged to provide an air pressure within the compartment higher than that of the pressure of the ambient air.

(C) Absorbent materials in areas where leakage or spillage of flammable fluids (i.e., liquids, vapors, gases) could occur as a result of normal operation, failures of the equipment, or leakage from joints or unions should be covered or treated to prevent the absorption of hazardous quantities of fluid. Whenever insulation made of absorbent materials is used on pipes, tanks or equipment containing Flammable fluids, suitable precautions should be taken to prevent the wetting of the insulation by Flammable fluids.

(D) All electrical equipment including cables and their accessories should, as far as is practicable, be constructed of material which do not support combustion and which meet the relevant requirements of FAR/JAR25 Appendix F Part 1. Other materials should be applied and/or protected so that the risk arising from a fire is not increased by their use.

(E) It should be shown by analysis and/or tests that there are adequate means to prevent hazardous quantities of smoke, flame, extinguishing agents or other noxious gases produced as a result of a fire from entering any crew or passenger compartment.

(F) All components of the overheat or fire detector system (if applicable) should be at least Fire resistant.

(G) If located in an area where flammable fluids are present, critical structural components, controls, and essential indicating systems required for safe flight must be able to withstand the conditions resulting from a flammable fluid fire in the area so that a safe landing may be made. Under these conditions the structural members and the control devices should be able to carry the loads appropriate to the expected maneuvers including any vibrations normally experienced in flight. The quantity of flammable fluid likely to be present assuming all fluid drains function correctly and the maximum temperature characteristics of the particular flammable fluid may be taken into account in the analysis of the effect of a fire on critical structure. When making the

determination that these components can withstand the flammable fluid fire conditions, the time required to detect such a fire should be taken into account.

(ii) In considering compliance, the actual protective measures required may be related to the situation considering the quantity and flammability characteristics of the fluid, the fire damage tolerance of the area, and the means available to the crew to minimize hazards from the fire. Provisions for fire detection, extinguishment, shutoff valves, fire suppression systems, etc., may be considered as alternate means to limit the duration of a fire in lieu of the protective measures listed in (2)(i) above. However, the consequences of spurious or erroneous operation of these systems should also be considered when evaluating the requirement for their provision. If action by the crew is necessary, quick-acting means (not necessarily fire detectors) should be provided to alert the crew in the event of a fire. Details of any action required by the crew must be in the Rotorcraft Flight Manual in accordance with § 29.1585(a).

(3) Compliance with § 29.863(d) requires as a minimum, type design data defining each area where flammable fluids or vapors might escape.

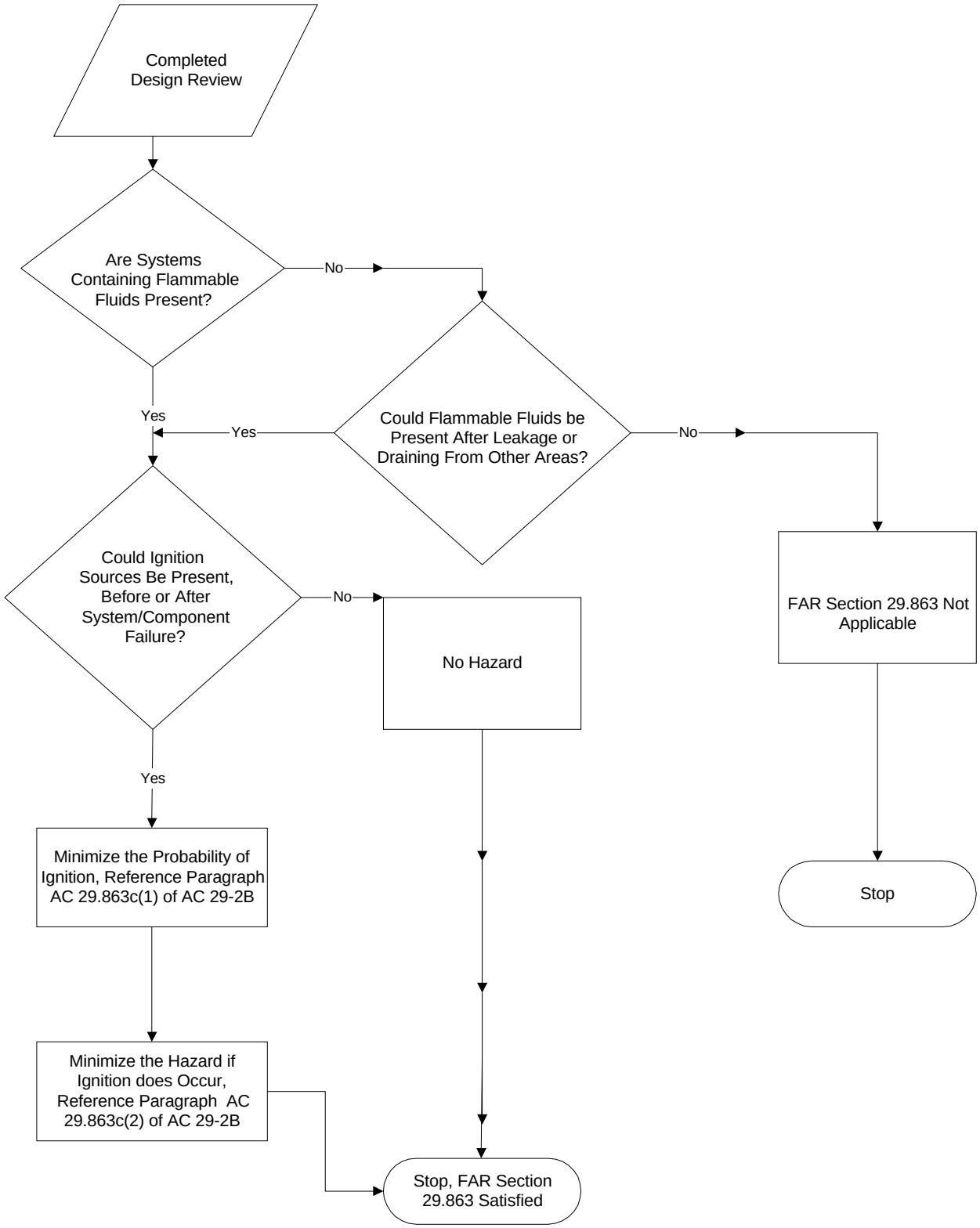

FIGURE AC 29.863-1

SUBPART D - DESIGN AND CONSTRUCTION

EXTERNAL LOAD ATTACHING MEANS.

AC 29.865. § 29.865 (Amendment 29-12) EXTERNAL LOAD ATTACHING MEANS.

a. Background. The external load attaching means standards for transport and normal category rotorcraft were originally contained in Subpart D, "Airworthiness Requirements of FAR Part 133, Rotorcraft External-Load Operations." Amendment 29-12, in 1977, added a new § 29.865, which moved these standards from Part 133 to Part 29. An identical transfer occurred in 1977 for Part 27. Transport Category A and B rotorcraft were initially used under Part 133 operations and, after Amendment 133-6, restricted category rotorcraft were also included under Part 133 operations. The use of restricted category first came about when an operator, exempt from Part 133, transferred harbor pilots to and from ships by a hoist and sling. The exemption was granted to study the feasibility of passenger transfer outside of the cabin. Subsequently, Amendment 133-9, adopted in January 1987, established a new Class D rotorcraft load combination for transporting passengers external to the rotorcraft. Amendment 133-9 also provided for the limitations and conditions for external passenger transportation and the necessary, associated safety requirements. Part 29 rules have not yet been changed to reflect the Class D requirements.

b. Explanation. While the regulation only addresses external load attaching means, this advisory material also includes guidance for certification of external load carrying devices for rotorcraft to be used in conjunction with Part 133, "Rotorcraft External Load Operations." Subpart D of Part 133 contains supplemental airworthiness requirements. Part 1 defines four classes of rotorcraft load combinations which are operationally approvable under the Part 133 operating rules and, thus, are eligible for certification under § 29.865. Parts 1 and 133 (through Amendment 133-9) contain a new rotorcraft load combination, Class D, that addresses personnel carried externally. The four classes of rotorcraft load combinations are summarized in figure AC 29.965-1 and are discussed in detail in paragraph c. For further information, AC 133-1A, "Rotorcraft External-Load Operations in Accordance with FAR Part 133," October 16, 1979, may be reviewed. Also, paragraph AC 29.25 (reference § 29.25) concerns, in part, jettisonable external cargo.

c. Procedures.

(1) The applicant should clearly identify the Parts 1 and 133 rotorcraft load combination classes (A, B, C, or D) that are being applied for. The loads and operating envelopes for each class should be determined and used to formulate the flight manual supplement and basic loads report. The applicant should show by analysis, test, or both, that the rotorcraft structure, the external load attachment means, and (for Class D operations) the personnel carrying device meets the requirements of §§ 29.865(a), 133.41, 133.43, and 133.45(e)(3) for the proposed operating envelope.

(2) For rotorcraft load combination classes A, B, and C, § 29.865 requires use of 2.5 g vertical limit load factor (N_{ZW}) at the maximum substantiable cargo load (which is typical for cargo hauling configurations). This 2.5 g limit load factor is based on an engineering evaluation and a rationalization of § 29.337 for high gross weight applications. However, for lower gross weight configurations (which are more typical of a Class D application; i.e., personnel transport or evacuation), a higher limit load factor is recommended to ensure that limit load is never exceeded in service. For example, a Class D external load carrying device which is certified to a limit vertical load factor of 2.5 g and is installed in a minimum gross weight configuration rotorcraft capable of generating a vertical limit load factor of 3.2 g's could experience ((3.2/2.5 X 1.5) X 100) - 85 percent of ultimate load under emergency conditions with new external hardware. However, if factors such as wear and corrosion have effected the structural integrity of the external hardware ultimate load could be exceeded in emergency service. In any case, FAA/AUTHORITY policy is to not exceed limit load in service. The higher load factor for Class D cases should be the analytically derived maximum vertical limit load factor for the restricted operating envelope being applied for; or, as a conservative option, a vertical limit load factor of 3.5 g's (reference § 29.337). Unless a more rational proposal is received, for Class D cases where maximum operating gross weight for external load is between design maximum weight and design minimum weight, linear interpolation can be used between $N_{ZW\ MIN}$ and $N_{ZW\ MAX}$ versus gross weight for design limit load factor determination.

(3) For applications that employ winches (or hoists) to raise or lower an external load from a hover (or another phase of flight), limit load must be properly determined based on the characteristics of the winch system and its installation such as mechanical advantage, static strength of the winch, static strength of its installation and the payload for any operating scenario being applied for. One acceptable method of determining limit load is by the following procedure:

(i) Determine the basic loads that fail and unspool the winch or its installation, respectively (Note: This determination should be based primarily on static strength; however, any dynamic load magnification factors that are significant should be accounted for).

(ii) Select the lower of the two values from (i) as the ultimate load of the winch system installation.

(iii) Divide the selected ultimate load by 1.5 to determine the limit load of the system.

(iv) Compare the system's derived limit load to the applied for one "g" payload multiplied by the maximum downward vertical load factor ($N_{ZW\ MAX}$) from paragraph (2) to determine the critical payload's limit value.

(v) If the critical limit payload is equal to or less than the system's derived limit load the installation is structurally approvable as presented.

(vi) If the critical limit payload exceeds the system's derived limit load then one of the following options should be considered:

(A) Disapproval.

(B) Application for exemption.

(C) Reduction of the applied for critical limit payload to less than or equal to the system's derived limit load.

(D) Redesign of the winch system (and installation) to increase its derived limit load to equal to or greater than the critical payload.

(E) A combination of options (C) and (D).

(F) Approvable operating restrictions to reduce $N_{ZW\ MAX}$ and, the corresponding critical limit payload to less than or equal to the system's derived limit load.

(4) In all approved cases, appropriate winch system placards and flight manual restrictions should be provided. Also, for Class D load combinations, the winch or hoist should have a demonstrated, acceptable level of reliability (for the phases of flight in which it is operable and in which the Class D load is carried externally). The winch should be disabled (or utilize an overriding mechanical safety device such as a flagged removable shear pin) to prevent inadvertent load unspooling or release during the phases of flight that the load is carried externally and operation is not intended. The maximum allowable winch cable angle should be determined and approved. This is primarily a structural requirement but should also be reviewed from an interference and flight handling criteria standpoint.

(5) It is recommended that winch or hoist systems be demonstrated as follows:

(i) At least 1/3 of the demonstration cycles should include the maximum aft angular displacement of the load from the drum applied for under § 29.865(a).

(ii) The load versus speed combinations of the winch should be demonstrated by showing repeatability of the no load-speed combination, the 50 percent load-speed combination, the 75 percent load-speed combination and the system limit load-speed combination.

(iii) A minimum of six consecutive, complete operation cycles should be conducted at the system's critical limit load speed combination.

(iv) In addition, the demonstration should cover all normal and emergency modes of intended operation and should include operation of all control devices, limit switches braking devices, and overload sensors in the system.

(v) Quick disconnect devices, and cable cutters should be demonstrated at 25 percent, 50 percent, 75 percent, and 100 percent of system limit load. Any electrical load release devices for Class D loads should be treated as a novel design feature and should be coordinated with the Rotorcraft Directorate.

(vi) Any devices or methods used to increase the mechanical advantage of the winch should also be demonstrated.

(vii) During each demonstration cycle, the winch should be operated from each station from which it can be controlled.

(viii) Operating manuals, flight manuals, and associated placards should be used and proofed during the demonstration.

(6) For all applications, it is good practice to obtain the gross weight range limits, the corresponding limit load factors (N_{ZW}), and substantiate the system, accordingly, for the critical loads. This procedure determines the critical basic loads and associated operating envelope for the rotorcraft load combination categories requested.

(7) For a request involving more than one class of rotorcraft load combinations, structural substantiation is required only for the critical case if accurately determinable from analysis.

(8) Appropriate placards, markings, and flight manual restrictions should be provided as determined by load capacities and operational restrictions. Each placard, marking, and flight manual supplement should be checked during TIA flight testing.

(9) For load Classes A, B, C, and D, the basic vertical limit load factor (N_{ZW}) from (c)(2) is converted to ultimate by multiplying the maximum applied load (i.e., the sum of the carrying device load and cargo or personnel loads) by 1.5 (for restricted category approvals, see guidance in paragraph AC 29 MG 5.) This load is used to substantiate all existing structure affected and all added structure associated with the external load carrying device and its attachments. Casting and/or fitting factors are to be applied where appropriate. For load Class D, the weight of each occupant carried externally should be assumed, for analysis purposes, to be that of the 95 percentile (202 pound) man (reference MIL-STD-1472, “Human Engineering Design Criteria for Military Systems, Equipment and Facilities).

(10) For load Classes B, C, and D, the maximum limit external load for which certification is requested, even though it may otherwise be much less than the maximum system capacity; e.g., cargo hook capacity, etc., should not exceed the rated

capacity of the quick release device used in the applicant's proposed design or, for Class D only, the rated capacity of the personnel carrying device. The quick release and personnel carrying devices should be strength tested (with FAA/AUTHORITY witness) or otherwise structurally substantiated to determine their allowable limit load capacity, if it has not been previously approved or was not produced to a recognized and approvable industry or military standard.

(11) For load Classes B, C, and D, in substantiating analyses and tests, the maximum ultimate external load is specified to be applied at the sling-load-line to rotorcraft vertical axis (Z axis) angles up to 30°, except for the forward direction. The 30° angle may be reduced, if impossible to obtain due to physical constraints, or operating limitations. If the angle is reduced, appropriate placards and flight manual changes are required.

(12) For load Classes B and C, an external releasing system is mandated which requires an approved primary quick release device to be installed on one of the pilot's primary controls. The quick release device (typically installed on the cyclic stick) is designed and located to allow the pilot to accomplish load release without hazardously limiting his ability to control the rotorcraft during emergency situations. A manual (backup) mechanical quick release device is also required. This control must also be readily accessible to the pilot or another designated crew member, such as a hoist operator. For Class B and C cargo applications, a sufficient amount of slack should be provided in the control cable to permit cargo hook movement without tripping the hook release.

(13) For Load Class D, an emergency release system is specified by § 133.45(e)(4) which requires two distinct actions for load release. This is intended for the phases of flight that the load is carried (and/or retrieved) externally. This release can be operated by the pilot from a primary control or, after a command is given by the pilot, by a dedicated crewmember from a remote location. Two distinct actions are required for the primary release to provide a higher level of safety for Class D human external loads. If the manual backup device is a cable cutter, it should be properly secured but readily accessible to the dedicated crewmember intended to use them.

(14) For Class D (human) load applications, to ensure personnel safety, the emergency release system design and associated placarding should be given special consideration. As stated previously, electrical release designs should be reviewed by the Rotorcraft Directorate prior to approval.

(15) For the majority of Class D applications, an approved single or multiple personnel carrier or container is required. The carrier or container may be previously approved or may be approved as part of the certification process. In any case, the single or multiple personnel carrier or container should be substantiated for the allowable ultimate load as determined under paragraphs c(2), (3), (4), (5), (6), (7), (8), and (9) above. The personnel carrier or container should be placarded for this capacity and show the proper internal arrangement and/or location of the intended occupants.

Some exceptions may exist that are certifiable under Class D that involve the technique of “Rappelling” from a rotorcraft. Rotorcraft load-combination D allows for such applications by definition (reference § 1.1). Other types of human cargo devices can be applied for under the Class D external load combination definition. An example is external carriage of personnel in a conveyance rigidly attached to the rotorcraft (e.g., cage, pod, secured litter or strap harness/seat arrangement).

(16) The personnel carrier or container should be easily and readily ingressed or egressed. Appropriate placards are required to provide ingress and egress instructions. For door latch fail-safety, more than two fastener or closure devices are recommended. Direct visual inspectability of the latch device by both crew and passengers is recommended to ensure it is fastened and secured. Any fabric, if used, should be durable and should meet the flammability standards of safety belts as stated in TSO C-22. Sharp corners and edges should be avoided, and padding should be used when necessary to protect the carrier and container occupants.

(17) The U.S. Coast Guard has three containers or devices that are used with rotorcraft for emergency rescue work. These devices and their National Stock Numbers are listed below. These devices have not been FAA/AUTHORITY approved; however, applications which involve them may be submitted for approval.

National Stock No.	Title
6530-00-042-6131	Stokes litter (one person)
1670-00-HR0-7970	Rescue basket
1680-090-511-2712	Rescue sling (one person)

NOTE: The rescue sling is a “collar” device that requires a person to exert some effort to remain in the collar. This sling should only be used in conjunction with properly written instructions and with personnel trained in the proper use of the sling.

(18) Flight test verification work that thoroughly checks out the operational envelope should be accomplished with every device approved for external cargo carriage (especially rotorcraft load combination D which includes external human cargo). The flight test program should show that all aspects of the applied for operations are safe, uncomplicated and can be conducted by an average flight crew under the most critical service environment and, in the case of human external cargo, under the pressures of an emergency scenario.

AC 29.865A. § 29.865 (Amendment 29-30) EXTERNAL LOAD ATTACHING MEANS.

a. Explanation. Amendment 29-30 added two requirements to § 29.865:

(1) Section 29.865(a) is clarified to allow use of a design factor less than 2.5g’s, for rotorcraft load combinations A, B, and C non-human external cargo applications provided the lower load factor is not likely to be exceeded by virtue of the

rotorcraft characteristics and capability. That is the rotorcraft design factors may be used for the cargo device system.

(2) Section 29.865(d) was added to clarify and specify the fatigue requirements for the external cargo attaching means. The “rotorcraft” standard is contained in § 29.571, paragraph AC 29.571.

b. Procedures.

(1) For § 29.865(a), if a design limit load factor less than 2.5g’s is requested, the applicant should provide a rational analysis and/or a flight operations data base that clearly shows that the load factor requested is unlikely to be exceeded in service.

Note: § 29.337(b) requires use of 2.0 g’s as a minimum.

(2) For § 29.865(d), all failures of the cargo attaching means (and the associated critical components) that are likely to be hazardous to the rotorcraft should be identified by an acceptable means such as an FMEA. The critical components associated with these failure modes should then be analyzed and/or tested to ensure that the likelihood of a fatigue failure or occurrence is acceptably minimized. In the majority of cases an analysis using the methods of AC 20-95, “Fatigue Evaluation of Rotorcraft Structure”, will be sufficient. Any component’s airworthiness limitations and/or mandatory inspections should be identified by this analysis, approved, and placed in the airworthiness limitations section of the maintenance manual or Instructions for Continued Airworthiness. See paragraph AC 29.1529 (§ 29.1529) for information on these manuals.

FIGURE AC 29.865-1
SUMMARY OF PART 133 ROTORCRAFT LOAD COMBINATIONS CERTIFIABLE
UNDER § 29.865
CLASS A

Basic Definition and Intended Use

Fixed External Cargo Container
Is defined by § 1.1 as a load combination in which the external load cannot move freely, cannot be jettisoned, and does not extend below the landing gear. This category usually features multiple attachments (loadpaths) to the airframe. Typical example is a hard mounted cargo basket attached to the rotorcraft crosstubes which is used to carry cargo from point A to point B.

Typical Load Limits

Certification limit is N_{ZW} X Maximum Substantiable External load. N_{ZW} is 2.5 per § 29.865 (See Procedure, paragraph (2)).

Quick Release Requirements

None. Cargo and its container are not jettisonable.

Certification Requirements -- Considerations

- For cargo only.
- Flight Manual Restrictions - § 133.47 requires a rotorcraft load combination flight manual supplement. Any flight envelope restrictions from § 29.865 should be a part of this supplement.
- Load limit placards are required by § 29.865(c).
- Flight envelope restriction placards may also be required for gross weight limitations, e.g., limitations, elimination of dangerous maneuvers, etc.
- Cargo tiedowns to prevent load shifting relative to airframe may be required.
- Effect of external cargo carrier and its maximum cargo weight on load paths, loads and fatigue of existing structure should be determined.
- TIA testing may be necessary to determine whether or not the system performs as intended and if placards and flight manual supplements are adequate.
- The applicant may elect to test the aerodynamic effect of several representative load shapes and include applicable information in the flight manual supplement. If such information is not in the RFM, then the operator may be required to obtain an operations approval under Part 133.

FIGURE AC 29.865-1 (continued)
SUMMARY OF PART 133 ROTORCRAFT LOAD COMBINATIONS CERTIFIABLE UNDER § 29.865
CLASS B

Basic Definition and Intended Use

Single Point Suspension External Load Airborne
Is defined by § 1.1 as a load combination in which the external load is jettisonable and is lifted free of land or water during the rotorcraft operation. The payload is typically suspended from a hook or a similar device. The hook may be attached to the rotorcraft structure or it may be attached to a movable hoist cable and the hoist itself attached to the rotorcraft. Typical use is to lift a cargo load until it is completely airborne and fly it from point A to point B. The load on the hoist may be stowed in the fuselage (in some cases) while being transported.

Typical Load Limits

Certification limit load is N_{ZW} X Maximum Substantiable External load. N_{ZW} is 2.5 per § 29.865 (See Procedure, paragraph (2)). Load may be limited by hoist allowables (reference paragraph (3)).

Quick Release Requirements

§ 29.865(b)(1) requires that a primary quick release system control device be installed on a primary control. Also, a manual quick release system backup actuation device must be available and readily accessible.

Certification Requirements -- Considerations

- For cargo only.
- Flight Manual Restrictions - § 133.47 requires a rotorcraft load combination flight manual supplement. Any flight envelope restrictions from § 29.865 should be a part of this supplement.
- Load limit placards are required by § 29.865(c).
- Flight envelope restriction placards may also be required.
- Certifiable external cargo load capacity may be further limited by §§ 133.41 and 133.43
- Quick release devices must be approved and be operable on a nonhazard basis by the pilot per § 29.865(b).
- Manual backup must be reliable but need not be overly sophisticated (cable cutters, axes, etc., used by crew members)
- Effect of maximum suspended load and its attachment to rotorcraft structure on load paths, loads and fatigue of existing structure should be determined.
- TIA testing may be necessary to determine whether or not the system performs as intended and if placards and flight manual supplements are adequate.

FIGURE AC 29.865-1 (continued)
SUMMARY OF PART 133 ROTORCRAFT LOAD COMBINATIONS CERTIFIABLE UNDER § 29.865
CLASS C

Basic Definition and Intended Use

Single Point Suspension External Load Partially Airborne
Is defined by § 1.1 as a load combination in which the external load is jettisonable and remains in contact with land or water during the rotorcraft operation. The payload is typically partially suspended by a net or cables from a cargo hook or a similar device. The cargo hook may be attached to the rotorcraft structure or may be attached to a movable hoist cable and the hoist itself attached to the rotorcraft. Typically used for stringing wire or laying cable where the payload is only partially suspended from the ground. (Note: Many applications combine both Category B and C operations because of obvious utility involved.)

Typical Load Limits

Certification limit load is N_{ZW} X Maximum Substantiable External load. N_{ZW} is 2.5 per § 29.865 (See Procedure, paragraph (2)). Load may be limited by hoist allowables (reference paragraph (3)).

Quick Release Requirements

§ 29.865(b)(1) requires that a primary quick release system control device be installed on a primary control. Also, a manual quick release system backup actuation device must be available and readily accessible.

Certification Requirements -- Considerations

- For cargo only.
- Flight Manual Restrictions - § 133.47 requires a rotorcraft load combination flight manual supplement. Any flight envelope restrictions from § 29.865 should be a part of this supplement.
- Load limit placards are required by § 29.865(c).
- Flight envelope restriction placards may also be required.
- Certifiable external cargo load capacity may be further limited by §§ 133.41 and 133.43
- Quick release devices must be approved and be operable on a nonhazard basis by the pilot per § 29.865(b).
- Manual backup must be reliable but need not be overly sophisticated (cable cutters, axes, etc., used by a crewmember)
- Effect of maximum suspended load and its attachment to rotorcraft structure on load paths, loads and fatigue of existing structure should be determined.
- TIA testing may be necessary to determine whether or not the system performs as intended and if placards and flight manual supplements are adequate.

FIGURE AC 29.865-1 (continued)
SUMMARY OF PART 133 ROTORCRAFT LOAD COMBINATIONS CERTIFIABLE UNDER § 29.865
CLASS D

Basic Definition and Intended Use

Single Point Suspension External Airborne Personnel Load
Is defined by § 1.1, as a load combination in which the external load is other than Class A, B, or C and has been specifically approved by the Administrator for that operation. This load combination includes human cargo. For human cargo operations, the payload which typically consists of personnel and their containment device is suspended from a hook or a similar device during all or part of a flight. The hook may be rigidly attached to the rotorcraft or may be attached to a movable hoist cable and the hoist itself rigidly attached to the rotorcraft. Typical use is for transfer of personnel to a ship. Carrying devices may transport one or more persons. Typical carrying devices are vest and straps, baskets, life preservers with straps and attachment devices, cages, or a suspended container.

Typical Load Limits

Certification limit load is N_{ZW} X Maximum Substantiable External load. N_{ZW} varies from 2.5 at max gross weight to 3.5 at minimum gross weight. (See Procedures (2)). Load is usually limited by hoist allowable or by personnel carrying device allowable (See Procedure (2), (3), and (10)).

Quick Release Requirements

Section § 29.865(b) does not currently contain quick release requirements for Class D rotorcraft - load combinations, but § 133.45(e)(4) requires that a primary emergency release system control device (requiring two distinct actions) be installed on a primary control or be installed near a designated crew member's station. Also, a manual quick-release system backup actuation device must be available and readily accessible.

Certification Requirements -- Considerations

- For loads other than Class A, B, or C loads. Is used for external personnel loads.
- § 29.865 has not been revised to reflect this category's requirements (it is currently covered by § 133.45(e)(4) only).
- Unless a public-use rotorcraft is being certified, only transport Category A rotorcraft are eligible to use this load category.
- Transport Category A rotorcraft must be certified for an OEI weight and altitude envelope which becomes the maximum envelope that can be used for Class D operations. This is currently required for a Class D rating by § 133.45(e)(1).
- Personnel lifting devices must be approved separately or as part of the certification project.

FIGURE AC 29.865-1 (continued)
CLASS D (continued)

- Devices must carry personnel internally or secure them safely in a harness or equivalent device.
- Flight Manual Restrictions - § 133.47 requires a rotorcraft load combination flight manual supplement. Any flight envelope restrictions from § 29.865 should be a part of this supplement.
- Load limit placards are required by § 29.865(c).
- Flight envelope restriction placards may also be required.
- Certifiable external load capacity is further limited by §§ 133.41, 133.43 and 133.45(e)(3), the load limit of the personnel carrying device.
- Quick release devices must be approved and be operable on a nonhazard basis by the pilot or a designated crewmember per §§ 133.44(c)(6) and 29.865(b).
- The lifting device must have an emergency release requiring two distinct actions § 133.45(e)(4).
- Manual backup must be accessible and reliable.
- Rotorcraft must be equipped to allow direct intercom among all crewmembers per § 133.45(e)(2). This may affect § 29.865 indirectly if human error or placarding could cause inadvertent load release or retention.
- Effect of maximum suspended load and its attachment to rotorcraft structure on load paths, loads and fatigue of existing structure should be determined.
- TIA testing may be necessary to determine whether or not the system performs as intended and if placards and flight manual supplements are adequate.

AC 29.865B. <u>§ 29.865 (Amendment 29-43) EXTERNAL LOAD ATTACHING MEANS</u>.

Advisory material for rotorcraft load combination A, B, C, and D safety requirements (External Loads) for Amendment 29-43 is located in Miscellaneous Guidance (MG) 12 of this AC.

SUBPART D - DESIGN AND CONSTRUCTION

MISCELLANEOUS (DESIGN AND CONSTRUCTION)

AC 29.871. § 29.871 LEVELING MARKS.

a. Explanation. Reference marks are required for leveling the rotorcraft on the ground. These marks are necessary for accurate determination of weight and balance effects, particularly after modifications to the basic rotorcraft.

b. Procedures.

(1) Reference marks are sometimes provided in pairs, one high in the cabin and one low. The plumb weight is suspended from the high mark by an appropriate mechanical attachment, and the lower mark is used to level the rotorcraft by centering the plumb weight. The lower reference mark should be a raised or depressed target symbol and shall be applied to a permanent structural component or permanently attached plate in a readily accessible location. Seat tracks, floors, or door sills which are attached with permanent fasteners are typical locations.

(2) Horizontal reference marks for support of bubble levels may also be used, particularly for smaller rotorcraft.

(3) Proper reference should be made to identify the leveling marks or points on the rotorcraft. Design provisions should be made to ensure these locations are not obscured by equipment, fairings, repair, or rework.

AC 29.873. § 29.873 BALLAST PROVISIONS.

a. Explanation.

(1) This rule requires that ballast provisions prevent inadvertent ballast shifting while in flight or as a result of a landing. Shifting of the ballast may cause a hazardous change in the center of gravity thereby affecting rotorcraft controllability.

(2) Other rules noted here allow removable and fixed ballast and require markings or placards to prevent overloading the ballast installation.

(i) Section 29.29 specifies that the rotorcraft empty weight will include any fixed ballast. Section 29.31 allows the use of removable ballast to comply with the flight requirements. However, ballast may not be adjusted (moved, reduced or increased) in flight.

(ii) Section 29.1541 requires conspicuous and durable markings or placards. Section 29.1557 requires placards stating allowable maximum weight, distributed loading, if necessary, and other appropriate limitations for ballast installation.

(3) Section 29.1583(c) concerns Rotorcraft Flight Manual instructions and information about removable ballast or loading information. The instructions must be included in the operating limitations section of the flight manual to allow ready observance of the limitations.

b. Procedures.

(1) The ballast installation may be substantiated by analysis or by static test. The design ultimate load may be derived from flight, landing, or minor crash conditions load factor specified in the rules. Substantiation by analysis will require use of the fitting factor prescribed by § 29.625 where appropriate. If static tests are to be conducted, a test plan should be prepared, submitted for evaluation and agreed upon prior to the test.

(2) Ballast installations in the aft part of the fuselage and tail boom may be subject to significant landing condition angular inertia load factors as well as the usual linear load factors.

(3) Substantiation methods and procedures acceptable for the airframe substantiation may be used for the ballast installation as well.

(4) Removable ballast will require attention to assure the ballast is secured easily and properly and will remain secured under the appropriate ballast design load factor requirements. The flight manual instructions should be evaluated for compliance with § 29.1583(c) by flight test and airframe personnel.

(5) The installation must be designed and placarded or marked for the maximum allowable ballast load and for other appropriate loading limits. Normally compliance with § 29.1541 is accomplished with a drawing review by airframe personnel along with an EMDO compliance and conformity inspection. An additional compliance inspection by airframe personnel can be conducted if desired.

AC 29.877. § 29.877 ICE PROTECTION.

NOTE: § 29.877 was removed and replaced by § 29.1419 in Amendment 29-21. This material is retained since this is one way to show compliance with § 29.877.

a. Background.

(1) In March 1984, the FAA/AUTHORITY for the first time certificated a rotorcraft for flight into known icing conditions. Several other manufacturers are pursuing designs for icing flight capability with certification planned for 1985 or 1986.

(2) Most rotorcraft icing technology has been developed for military rotorcraft. The only U.S. military rotorcraft equipped and approved for flight into icing conditions is

the UH-60A (Blackhawk). The UH-60A is limited to supercooled cloud conditions where liquid water content (LWC) does not exceed 1.0gm/m^3 and outside air temperature (OAT) is not below -20° C.

(3) Many rotorcraft operators have voiced a high priority on obtaining rotorcraft approved for operation in icing conditions.

(4) The icing characteristics envelope of FAR Part 25, Appendix C, has served as a satisfactory design criteria for fixed-wing operations for two decades. The envelope, as presented, extends to 22,000 feet with possible extents to 30,000 feet but does not present icing severity as a function of altitude. At the time the envelope was derived, it was assumed that all transport category airplanes would operate to at least 22,000 feet. For present state-of-the-art rotorcraft, this assumption is not valid. As such, an altitude limited icing envelope based on the same data used to derive the Part 25, Appendix C, and the Part 29, Appendix C, envelopes is presented as an alternate to the full icing envelope. In addition, a second icing envelope which effectively characterizes supercooled clouds from ground level to 10,000 feet is presented as a second alternative to the Part 29, Appendix C, envelope. The second altitude limited envelope described in reference 386d(2) was derived from recent additional airborne measurements.

b. Explanation.

(1) General.

(i) The discussion in this paragraph pertains generally to certifications to the full icing envelope of Part 29, Appendix C, within the altitude limitations of the rotorcraft or to one of the altitude limited icing envelopes based on a 10,000-foot pressure altitude limit. The actual icing envelope considered may be further restricted based on the actual pressure attitude envelope for which certification is requested. It envisions certification with full ice protection systems (rotor blades, windshields, engine inlets, stabilizer surfaces, etc.). With the exception of pilot controllable variables such as altitude and airspeed, limited certification (either in terms of icing envelope or protection capability) is not envisaged at this time due to the difficulty in forecasting the severity of icing conditions, relating the effects of the forecasted conditions to the type of aircraft, and relating the effects of reported icing among various types of aircraft, particularly between fixed and rotary-wing aircraft. In addition, with a limited protection capability, viable escape options may not be operationally available if limitations are exceeded.

(ii) The discussion in this paragraph, regarding rotor blade ice protection, is oriented primarily toward electrothermal rotor deicing systems, since these have the most widespread acceptance and projected use within the industry. Also, most of the testing and research into rotorcraft ice protection to date has been conducted with this type of system. Research is continuing with other types of systems such as anti-icing fluid systems, and information will be added to address certification of these as

necessary. It should also be noted that most of the rotorcraft icing experience accumulated to date has been on rotorcraft with symmetrical airfoil sections. The application of this experience to rotorcraft with asymmetrical airfoils should be carefully evaluated. Limited experience has been gained during development and qualification testing of the Army Blackhawk on asymmetrical airfoil icing characteristics. The most prominent difference appears to be a more rapid degradation of airfoil performance. Rapidity of performance degradation is also dependent upon severity of the icing condition (primarily a function of liquid water content) and ice shape (primarily a function of OAT and median volumetric droplet diameter (MVD)).

(iii) The effects of ice can vary considerably from rotorcraft to rotorcraft. Experience gained for a rotor system with an identical blade profile could provide valuable information but should be used cautiously when applied to another rotorcraft. Assumptions cannot necessarily be made based on icing test results from another rotorcraft. Particular care should be exercised when drawing from fixed-wing icing experience as the widely different and varying conditions seen by the rotor blades make many comparisons with fixed-wing results invalid. Likewise, icing effects on rotor blades vary significantly from those on other parts of the rotorcraft. This is due to changing blade velocity as compared with the constant velocity of the remaining parts.

(2) Reference Material. Prior to commencement of efforts to design and certify a rotorcraft, the references listed in paragraph AC 29.877d should be reviewed. FAA Technical Report ADS-4, Engineering Summary of Airframe Icing Technical Data, December 1963, although somewhat dated, is recommended for basic aircraft icing protection system design information.

(3) Objective. The objective of icing certification is to verify that throughout the approved envelope, the rotorcraft can operate safely in icing conditions expected to be encountered in service (i.e., Appendix C of Part 29 or one of the altitude limited icing envelopes presented herein). This will entail determining that no icing limitations exist or defining what the limitations are, as well as establishing the adequacy of the ice warning means (or system) and the ice protection system. A limiting condition may manifest itself in one of several areas such as handling qualities, performance, autorotation, asymmetric shedding from the rotors, visibility through the windshield, etc. Prior to flight tests in icing conditions, sufficient analyses should have been conducted to determine the design points for the particular item of the rotorcraft being analyzed (windshield, engine inlet, rotor blades, etc.). After the analyses are reviewed and found adequate, tests should be conducted to confirm that the analyses are valid and that the rotorcraft can operate safely in any supercooled cloud icing condition defined by Part 29, Appendix C, or one of the altitude limited icing envelopes. References 386d(1) and (3) may be useful in determining the design points and extrapolation of test data to the desired design points.

(4) Planning. For best utilization of both the applicant's and the FAA/AUTHORITY's resources, the applicant should submit a certification plan at the start of the design and development effort. The certification plan should describe all

efforts intended to lead to certification and should include the following basic information:

Rotorcraft and systems description.
Ice protection systems description.
Certification checklist.
Description of analyses or tests planned to demonstrate compliance.
Projected schedules of design, analyses, testing, and reporting efforts.
Methods of test - artificial vs. natural.
Methods of control of variables.
Data acquisition instrumentation.
Data reduction procedures.

(5) Environment.

(i) Definitions.

(A) Supercooled Clouds. Clouds containing water droplets (below 32° F) that have remained in the liquid state. Supercooled water droplets will freeze upon impact with another object. Water droplets have been observed in the liquid state at ambient temperatures as low as -60° F. The rate of ice accretion on an aircraft component is dependent upon many factors such as droplet size, cloud liquid water content, ambient temperature, and component size, shape, and velocity.

(B) Ice Crystal Clouds. Glaciated clouds existing usually at very cold temperatures where moisture has frozen to the solid or crystal state.

(C) Mixed Conditions. Partially glaciated clouds at ambient temperatures below 32° F containing a mixture of ice crystals and supercooled water droplets.

(D) Freezing Rain and Freezing Drizzle. Precipitation existing within clouds or below clouds at ambient temperatures below 32° F where rain droplets remain in the supercooled liquid state.

(E) Sleet. Precipitation of transparent or translucent pellets of ice which have a diameter of 5mm or less.

(F) Hail. Solid precipitation in the form of balls or pieces of ice (hail stones) with diameters ranging from 5mm to more than 50mm.

(ii) Appendix C of Part 29 defines the supercooled cloud environment necessary for certification of rotorcraft in icing except that the pressure altitude limitation is that of the rotorcraft or that selected by the applicant, provided the remaining altitude envelope is operationally practical. Due to air traffic system compatibility constraints, approval of a maximum altitude less than 10,000 feet pressure altitude should be discouraged. However, there are operations where a lower

maximum altitude has no effect on the air traffic system and would still be operationally useful. Figures 3 and 6 of Appendix C, Part 29, relate the variation of average LWC as a function of cloud horizontal extent. These relationships should be used for design assessment of the most critical combinations of conditions as a function of en route distance. This, in combination with a capability to hold in icing conditions for 30 minutes at the destination, is commensurate with policies previously established for fixed-wing aircraft. Figures 3 and 6 should be used in conjunction with the altitude limited criteria of figures AC 29.877-1 through AC 29.877-4 herein. The new criteria of figure AC 29.877-5 includes “duration” (horizontal extent) as the third dimension. It is emphasized that LWC extremes expressed in Part 29, Appendix C, criteria and the alternate envelopes represent the maximum average values to be anticipated within an exceedance probability of 99.9 percent. Transient, instantaneous peak values of much higher LWC have been observed. These instantaneous peak values appear to be of little significance to the design of protected and unprotected surfaces; however, these high values, if encountered, may induce shedding of ice from some unprotected surfaces. This is due to radical changes in the rate of release of latent heat and resultant changes in the structural properties and adhesion force of ice.

(iii) A recent analysis performed at the FAA Technical Center concludes that the aircraft icing environment below 10,000 feet is not as severe in terms of LWC and OAT as that depicted in Part 29, Appendix C, envelope. This AC presents two different altitude limited envelopes that may be employed by those applicants who elect to certify with a 10,000-foot pressure altitude limit. One of these altitude limited envelopes is based upon the same data that were used to derive the design criteria of the Part 29, Appendix C (figures AC 29.877-1 thru 4), while the other is based upon a recently established characterization of supercool clouds below 10,000 feet (figure AC 29.877-5). The applicant may select either of the approaches to altitude limitation. At the present time, applicants have not consistently selected one or the other. If experience shows a unanimous preference for one or the other, the one not used will be deleted in a future revision. The data used to derive these limited envelopes cannot be used to further define icing conditions between 10,000 feet and 22,000 feet; hence, above 10,000 feet, the Part 29, Appendix C, envelopes should be used. It should be noted that the engine inlets should still meet the icing requirements of § 29.1093. The limited icing envelopes may be used on an equivalent safety basis to show compliance with the intent of § 29.1093 if the altitude limit established for the rotorcraft is not greater than 10,000 feet.

(iv) Significant effects can result from various combinations of parameters. For example, most rapid ice accumulations occur at the high values of liquid water content, and the greatest impingement area occurs at the high values of droplet size. Most critical ice shapes are a function of each of these parameters in addition to airspeed, surface temperature, and surface contour. Care should be taken to explore the entire specified ranges of these parameters during the design, development, and certification efforts.

(v) Mixed conditions (i.e., a combination of ice crystals and supercooled water droplets) and freezing rain or freezing drizzle are not addressed in the Part 29 environmental criteria but can present more severe icing conditions than those defined. Although the probability of encountering freezing rain is relatively low, mixed conditions commonly occur in supercooled cloud formations. Little data have been gathered on the effects of encountering mixed conditions (see reference AC 29.877d(7)). There are no criteria for certification in mixed conditions or freezing rain at present. In addition to the hazards of operating any aircraft in icing, certain aspects of rotorcraft icing (relatively low altitude operation, asymmetric shedding with resulting vibration, and ice damage or ingestion) warrant a caution notice in the RFM advising that the rotorcraft is not certified for operation in freezing rain or freezing drizzle. Avoidance procedures (e.g., climb or descent) may also be useful.

(6) Flight Test Prerequisites.

(i) The prototype rotorcraft should be capable of IFR and IMC flight.

(ii) Sufficient analyses should be developed, submitted, and accepted by FAA/AUTHORITY to show that the rotorcraft is capable of safely operating to the selected design points of both the continuous maximum and intermittent maximum conditions of Part 29, Appendix C, or one of the altitude limited icing envelopes. A detailed failure modes and effects analysis (FMEA) should be performed.

(iii) Specific attention should be given to (1) assuring that the selected design condition(s) of atmospheric and rotorcraft flight envelopes have been identified; (2) qualification and design of ice protection systems and components; and (3) component installation and ice formation effects upon basic rotorcraft structural properties and handling qualities. These assurances can be established from analyses, bench test, and/or dry air flight tests or simulated icing tests, as appropriate prior to flight tests in natural icing.

(iv) The applicant should assess rotor blade stability with ice deposits to assure that dynamic instability will not occur in icing conditions. This assessment may be accomplished by analysis including consideration of failure of the most critical segment of the rotor blade ice protection system. It also may be accomplished by experimental means such as attaching dummy ice shapes to the blades and using a whirl stand or wind tunnel.

c. Procedures.

(1) Compliance.

(i) In general, compliance can be established when there is reasonable assurance that while operating in the specified icing environment (1) the engine(s) will not flameout or experience significant power losses or damage; (2) stress levels are not reached with ice accumulations that can endanger the rotorcraft or cause serious

reductions in component life; (3) the handling qualities, performance, visibility, and systems operation are defined and are not deteriorated unacceptably; (4) inlet, vent or drain blockage (such as fuel vent, engine, or transmission cooler) is not excessive; and (5) autorotation characteristics are acceptable with maximum ice accretion between de-ice cycles. Assessment of performance loss should include not only the drag and weight of the ice itself but electrical or other load demands of the ice protection system and any performance changes resulting from modified rotor blade contours.

(ii) It is emphasized that ice formations (shape, weight, etc.) vary significantly under varying conditions of outside air temperature (OAT), liquid water content (LWC), median volume diameter (MVD), airspeed, attitude, and rotor RPM. The most critical conditions should be defined by means of analyses or test and verified by test. Performance changes under these various conditions should be determined and found acceptable.

(iii) Laboratory, icing tunnel, ground spray rig, and airborne icing tanker tests are all very useful in developing an ice protection capability, but none of these, either individually or collectively, can satisfy the full requirements for certification. None can presently duplicate the combinations of liquid water content, droplet size, flow field, and random shedding patterns found in natural icing conditions. Airborne tankers hold considerable promise of being able to fulfill certification requirements (in addition to the advantage of being able to produce an icing environment on demand rather than having to wait for it to occur in nature), but tankers have not been able to generate droplet sizes that cover the complete envelope for certification. Many improvements have been made in some tankers in recent years; however, large droplet sizes have typically been a problem. Also, the size of existing tanker clouds is not of sufficient cross section to immerse the entire rotorcraft. There are also solar radiation and relative humidity effects to be considered and correlated with natural icing when using a tanker. The tanker should be able to immerse the entire rotor system as a minimum and should have a means of controlling and changing the cloud characteristics uniformly and repeatably. Until an artificial method has been successfully demonstrated and accepted, icing certification should include flight tests in natural icing conditions.

(iv) Flight testing in natural icing conditions also has limitations. Reference AC 29.877d(16) contains information that may be useful in planning natural icing flight tests. The key limitation of natural icing flight tests is being able to find the combinations of conditions that comprise critical design points. This is especially true of those points falling near the 99.9 percentile of exceedence probability; e.g., high LWC at low OAT with large MVD. It is emphasized that some more severe design points, however, may exist within the atmospheric icing envelope rather than near the edges or corners of the envelope. This does not mean that natural icing tests must be conducted at all the selected design conditions. Natural icing tests should be conducted in conditions as close to design points as possible and sufficient correlation shown with the analyses to assure that the rotorcraft can operate safely throughout the design envelope.

(v) Certification flight testing should be extensive enough to provide reasonable assurance that either induced or random ice shedding does not present a problem. The most likely indication of a problem if it exists will be ice impact on the airframe or rotor imbalance resulting in vibration. The following should be considered sufficient for rejection:

(A) Vibrations sufficient to make the instruments difficult to read accurately.

(B) Vibrations sufficient to exceed the structural or fatigue limits of any rotorcraft part such as blade, mast, or transmission components.

(C) Ice impact damage to essential parts, such as the tail rotor, that could create a flight hazard. Cosmetic, nonstructure flaws that do not exceed wear and tear characteristics or maintenance criteria are acceptable. Any ice shedding effects that require immediate maintenance action are unacceptable.

(vi) There should be a means identified or provided for determining the formation of ice on critical parts of the rotorcraft which can be met by a reliable and safe natural warning or an ice detection system. A system utilizing OAT must include an accurate OAT measurement since the onset of icing can occur in a very narrow temperature band requiring sensitive and accurate OAT measurement. OAT accuracy should be relative to the true temperature of the air mass. Total system accuracy should be ±0.5° C in the -5.0° to +5.0° C range and ±1° C throughout the remaining temperature range. The location of the sensor has been shown to be very critical and, in effect, there can be a position error or other errors induced by ice formations or solar radiation. If the system measures liquid water content, consideration should be given to the fact that the actual LWC fluctuates considerably as the rotorcraft passes through an icing environment. A warning system displaying or utilizing a peak or average LWC value (rather than an instantaneous readout) should include sufficient conservatism to provide a margin of safety. The value of an LWC detecting system lies in its utility as a warning that ice is being encountered. The actual magnitude of LWC in combination with OAT and MVD can be used to indicate the icing severity level. The U.S. Army is currently developing an advanced ice detection system for potential application to rotorcraft.

(2) Instrumentation and Data Collection.

(i) Instrumentation proposed for certification tests, including flight strain surveys, should be reviewed as early as possible in the program to establish that it will provide the necessary data. The need for accurate OAT measurement previously noted for operation in icing also applies to the certificated configuration. Mechanical devices such as the rotating multicylinder and rotating disc have been used for measuring ice accretion rate which is relatable by calibration to average LWC and MVD. More recently, hybrid mechanical/electronic LWC measuring devices have been used. Devices that rely on ice accretion as a signal source are subject to the Ludlam

limit (the limits whereby latent heat of fusion is not totally absorbed, thus resulting in incomplete freezing of the moisture and some inaccuracy in the indication). The Ludlam limit is a function of various parameters including OAT, airspeed, LWC, and MVD. The Ludlam limit may vary from one device to another. (See references AC 29.877d(8) and AC 29.877d(9)(i) for further information). Gelatin slides, soot and oil slides, and more recently, laser nephelometers, have been used to measure droplet size. Other calibrated devices intended for measurement of LWC should be used. Reference AC 29.877d(16) describes several of these devices. Photographic coverage of critical areas may be necessary to ascertain that ice protection systems are functioning properly and that there are no runback problems. (The term “runback” refers to liquid water that has not been evaporated by surface de-ice equipment and flows back to an unheated area subject to freezing.) Reference AC 29.877d(19) highlights use of video techniques and equipment for this purpose. Some systems will require acceptable calibration techniques and data.

(ii) Gelatin, soot, and oil slides provide data that can be used to estimate MVD at discrete intervals while laser nephelometer data can provide time histories of MVD droplet size distributions. Gelatin slide data should be taken frequently during test flights to properly characterize the cloud. Laser nephelometer data have been found to be highly dependent upon knowledge of the equipment and calibration. Proper calibration, maintenance, and data processing techniques should be utilized and demonstrated. Additional information on the subject may be found in Reference AC 29.877d(18).

(iii) Structural instrumentation requirements should also be established as early as possible in the program. Flight strain measurements are strongly recommended in assessing the ice imposed stress on the rotorcraft. The flight strain measurements should determine the effect on fatigue life due to ice accumulation for such items as main rotor blades, main rotor hub components, rotating and fixed controls, horizontal stabilizer, tail rotor, etc. The subsequent proper operation of retractable devices such as landing gear should be demonstrated with representative ice accretion. In addition, the static and fatigue strength of the blade with heater mat must be substantiated. Any effect of the heater mat on fatigue strength of the blades must be considered.

(3) Additional Considerations. The following are items to consider in an icing certification program. They are not intended to be all-inclusive, and the possibility of widely differing characteristics and critical areas among various rotorcraft in icing should be considered.

(i) The rotorcraft should be shown by analysis and confirmed by either simulated or natural icing tests to be capable of holding for 30 minutes in the design conditions of the continuous maximum icing envelope at the most critical weight, CG, and altitude with a fully functional ice protection system. For those applicants who elect to certify their rotorcraft to the new supercooled cloud characterization of figure AC 29.877-5, the rotorcraft should be shown by analysis and confirmed by either

simulated or natural icing tests to be capable of holding for 30 minutes in the design conditions of the icing envelopes up to a maximum of 0.8 grams per cubic meter of LWC at the most critical weight, CG, and altitude.

(ii) A single ice protection system and power source may be considered acceptable provided that after any single failure of the ice protection system, the rotorcraft can be shown by analysis and/or test to be capable of safe operation (no hazard) for 15 minutes following failure recognition in the continuous icing envelope used as the basis for certification within the same icing limits used for the 30-minute hold criteria. During this 15-minute period the rotorcraft may exhibit degraded characteristics. Pilot controllable operating limitations such as airspeed may be used to satisfy this continued safe flight criteria. For purposes of determining performance and handling qualities degradation, ice protection system failure need not be considered to occur simultaneously with engine failure unless ice protection system operation is dependent upon engine operation.

(iii) Although current airborne weather radar technology systems may be useful in avoiding potential icing conditions by detecting precipitation, the use of weather radar is not an FAA/AUTHORITY requirement for icing certification.

(iv) If the ice protection is not operating continuously, there must be a means to advise the crew when the rotorcraft is in icing conditions in order that the system may be activated.

(v) No autorotational performance data is required for rotorcraft which have Category A powerplant installations. All rotorcraft certified for flight in icing conditions must be capable of full autorotational landings with the ice protection system operating. Autorotational entry, steady state, and flare entry flying qualities and performance should be evaluated with an ice load. Since the Category A en route performance can vary as the ice protection system operates, a mean value of cyclic torque is acceptable provided at no time does the rate of climb fall below zero. The rotorcraft is assumed to be clear prior to takeoff, and therefore the takeoff performance is not degraded. The landing performance can be based on the in-flight assessment of overall performance degradation. Items such as fuel burns can be used as part of the in-flight performance degradation determination. Regardless of the methods used to determine performance degradation, it must be easily used by the crew. The hover performance should be addressed for the termination of a flight after an icing encounter. The engines must be protected from the adverse effects of ice. When ice does accumulate on the inlets, screens, etc., it must be accounted for in performance, engine operating characteristics, and inlet distortion.

(vi) The handling qualities of the rotorcraft must be substantiated if ice can accumulate on any surface. When ice can accumulate on unprotected surfaces the rotorcraft must exhibit satisfactory VFR/IFR handling qualities. In addition, following the failure of the de-ice system, the rotorcraft must be safely controllable for 15 minutes, i.e., the rotorcraft must be free from excessive and rapid divergence.

Artificial ice shapes may be acceptable for acquisition of flight test data necessary for handling qualities and performance evaluations and demonstrations.

(vii) Items such as fuel tank vents, cooling vents, antennas, etc., must be substantiated for maximum icing effects.

(viii) The ice protection system should be sufficiently reliable to perform its intended function in accordance with the requirements of § 29.1309. These requirements may in some instances be met by the use of sound engineering judgment during design and compliance demonstrations. In many instances, use of good design practices, failure modes and effects analysis, and similarity analyses combined with good judgment will be adequate. In some instances the need for reliability analyses may be desirable. Additional information pertaining to reliability is contained in paragraph AC 29.1309 (§ 29.1309).

(ix) The subject of lightning must be addressed. The criteria applied on rotorcraft with ice protection systems are that “the rotorcraft must be protected in such a manner to minimize lightning risk.” The general rules of § 29.1309(a), (b), and (c) are applicable to assure adequate lightning protection.

(x) Ice protection of pitot-static sources, windshields, inlets, exposed control linkages, etc., must be considered.

(xi) The impact of ice protection system failure, complete and partial, and achieving adequate warning thereof must be assessed.

(xii) The impact of delayed application of ice protection systems should be assessed. Hazardous conditions should not be apparent. Any rotorcraft characteristic changes resulting should be covered in cautionary material in the rotorcraft flight manual.

(xiii) Possible droop stop malfunction with ice accumulation and its potential hazard to the rotorcraft, its occupants, and ground personnel must be assessed.

(xiv) Possible ice shedding hazards to ground personnel or equipment in proximity to turning rotors following flight in icing conditions should be given much consideration.

(4) Flight Manual. Areas of the flight manual which may require inputs are:

(i) Operating limitations including approved types of operation and prohibiting operation in freezing rain or freezing drizzle conditions. Avoidance procedures may also be useful.

(ii) Normal Operating Procedures. Information on the ice detection means or system and ice protection system and its capabilities.

(iii) Emergency Operating Procedures. Operating procedures containing essential information particularly with system failure.

(iv) Caution Notes. These caution notes should advise or address:

(A) Against inducing asymmetric shedding with rapid control inputs or rotor speed changes, except possibly as a last resort. Rotor speed changes appear to be more effective than control inputs in removing ice from the rotor blades of some rotorcraft.

(B) Loss in range, climb rate, and hover capability following prolonged operation in icing.

(C) The need for clean blade surfaces and use of approved cleaning solvents or ground deicing/anti-icing agents prior to starting rotors.

(D) Changes in autorotational characteristics resulting from formations.

(E) If the rotorcraft has been certificated for flight in supercooled clouds and falling and blowing snow, flight in other conditions such as freezing rain, freezing drizzle, sleet, hail, and combinations of these conditions with supercooled clouds should be avoided.

(F) The potential hazards to ground personnel, passengers deplaning, and equipment in proximity to turning rotors following flight in icing conditions.

d. Icing References.

(1) FAA Technical Report ADS-4, Engineering Summary of Airframe Icing Technical Data, December 1963.

(2) A New Characterization of Supercooled Clouds Below 10,000 Feet DOT/FAA/CT-83/22, June 1983.

(3) Advisory Circular 20-73, Aircraft Ice Protection, 21 April 71.

(4) Advisory Circular 91-51, Airplane De-ice and Anti-ice Systems, 9/15/77.

(5) FAA Report RD-77-76, Engineering Summary of Powerplant Icing Technical Data, July 1977.

(6) United States Army Aviation Engineering Flight Activity Reports:

(i) Natural Icing Tests, UH-1H Helicopter, Final Report, June 1974, USAASTA Project No. 74-31.

(ii) Artificial Icing Tests, UH-1H Helicopter, Part 1, Final Report, January 1974, USAASTA Project No. 73-04-4.

(iii) Artificial Icing Tests, UH-1H Helicopter, Part II, Heated Glass Windshield, Final Report, USAASTA Project No. 73-04-4.

(iv) Artificial Icing Tests, Lockheed Advanced Ice Protection System Installed on a UH-1H Helicopter, Final Report, June 1975, USAAEFA Project No. 74-13.

(v) Artificial and Natural Icing Tests for Qualification of the UH-1H, Kit A Aircraft, Letter Report, USAAEFA Project No. 78-21-1.

(vi) Microphysical Properties of Artificial and Natural Clouds and Their Effects on UH-1H Helicopter Icing, Report USAAEFA Project No. 78-21-2.

(vii) Helicopter Icing Spray System (HISS) Nozzle Improvement Evaluation, Final Report, September 1981, USAAEFA Project No. 79-002-2.

(viii) Artificial and Natural Icing Tests of the YCH-4TD, Final Report, May 1981, USAAEFA Project No. 79-07.

(ix) Limited Artificial Icing Tests of the OV-ID, Letter Report, July 1981, USAAEFA Project No. 80-16, (Limited Distribution).

(x) JUH-IH Ice Phobic Coating Tests, Final Report, July 1980, USAAEFA Project No. 79-02.

(xi) Artificial and Natural Icing Tests, Production UH-60A Helicopter, Final Report, June 1980, USAAEFA Project No. 79-19.

(xii) Helicopter Icing Spray System (HISS) Evaluation and Improvements, Letter Report, June 1981, USAAEFA Project NO. 80-04.

(xiii) Artificial Icing Test of CH-47C Helicopter with Fiberglass Rotor Blades, Final Report, July 1979, USAAEFA Project No. 78-18.

(xiv) Limited Artificial and Natural Icing Tests, Production UH-60A Helicopter (Reevaluation), Final Report, August 1981, USAAEFA Project No. 80-14.

(7) Further Icing Experiments on an Unheated Nonrotating Cylinder, National Research Council, Canada Report LTR-LT-105, dated November 1979, by J.R. Stallabrass and P.F. Hearty.

(8) Ludlam, F.H., Heat Economy of a Rimed Cylinder, Quarterly Journal, Royal Meteorological Society, Vol. 77, 1951.

(9) U.S. Army AMRDL Reports:

(i) USAAMRDL TR 73-38, Ice Protection Investigation For Advanced Rotary Wing Aircraft, J.B. Werner, August 1973, AD 7711182.

(ii) Werner, J.B., The Development of an Advanced Anti-Icing/Deicing Capability for U.S. Army Helicopters, Volume 1, Design Criteria and Technology Considerations, USAAMRDL - TR-75-34A, Eustis Directorate, U.S. Army Air Mobility R&D Laboratory, November 1975, AD A019044.

(iii) Werner, J.B., The Development of an Advanced Anti-Icing/Deicing Capability for U.S. Army Helicopters, Volume 2, Ice Protection System Application to the UH-1H Helicopter, USAAMRDL - TR-75-34B, Eustis Directorate, U.S. Army Air Mobility Research and Development Laboratory, November 1975, AD A019049.

(iv) USAAMRDL-TR-76-32, Ottawa Spray Rig Tests of an Ice Protection System Applied to the UH-1H Helicopter, November 1976, AD A0034458.

(v) USARTL-TR-78-48, Icing Tests of a UH-1H Helicopter with an Electrothermal Ice Protection System Under Simulated and Natural Icing Conditions, April 1979.

(vi) USAAMRDL-TR77-36, Final Report, Natural Icing Flights and Additional Simulated Icing Tests of a UH-1H Helicopter Incorporating an Electrothermal Ice Protection System, July 1978, AD A059704.

(10) Technical Feasibility Test of Ice Phobic Coatings for Rain Erosion in Simulated Flight Conditions, U.S. Army Test and Evaluation Command, Final Report, 4-AI-192-IPS-001, August 1980.

(11) Technical Feasibility Test of Ice Phobic Coatings in Simulated Icing Flight Conditions, U.S. Army TECOM, Final Report, 4-CO-160-000-048, September 1980.

(12) Aircraft Icing, NASA Conference Publication 2086, FAA-RD-78-109, July 1978.

(13) Helicopter Icing Review, FAA Technical Center, Final Report, FAA-CT-80-210, September 1980.

(14) National Icing Facilities Requirements Investigation, Final Report, FAA Technical Center, FAA-CT-81-35, March 1981.

(15) Aircraft Icing, AGARD Advisory Report No. 127, November 1978.

(16) Rotorcraft Icing - Review and Prospects, AGARD Advisory Report, AR-166, September 1981.

(17) Advisory Circular 20-117 - Hazards Following Ground Deicing and Ground Operations in Conditions Conducive to Aircraft Icing, Dec. 17, 1982.

(18) Olson, W., Experimental Comparison of Icing Cloud Instruments, January 1983, NASA TM 83340.

(19) JUH-1H Redesigned pneumatic boot deicing system flight test evaluation. Hayworth, L., Graham, M., to be published. USAAEFA Edwards AFB, California. Project No. 834-13.

(20) An Appraisal of the Single Rotating Cylinder Method of Liquid Water Content Measurement, National Research Council Canada Report LTR-LT-92, dated November 1978, by J.R. Stallabrass.

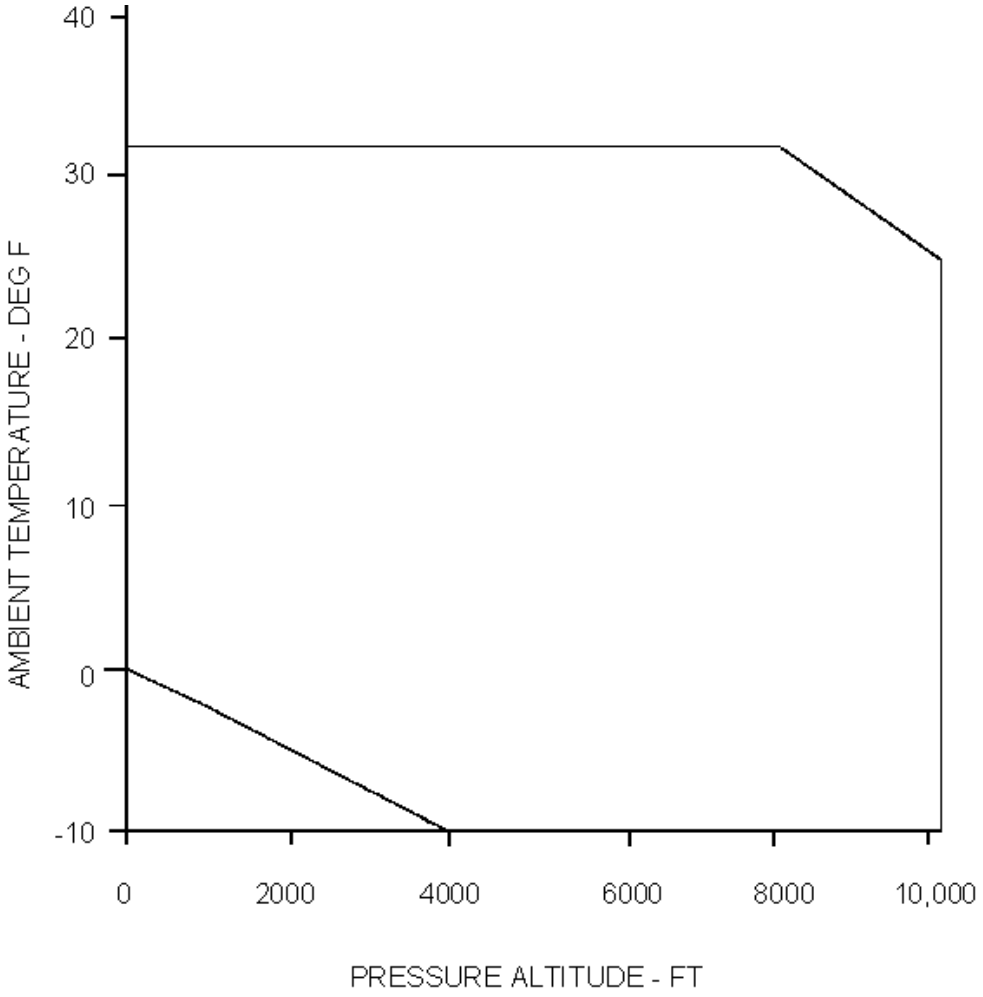

FIGURE AC 29.877-1 CONTINUOUS ICING - TEMPERATURE VS ALTITUDE LIMITS

Figures AC 29.877-1 through 4 represent one approach to a 10,000-foot altitude limit and Figure AC 29.877-5 represent another. See Paragraph 386b(5)(iii) for a discussion of the individual application of the two approaches.

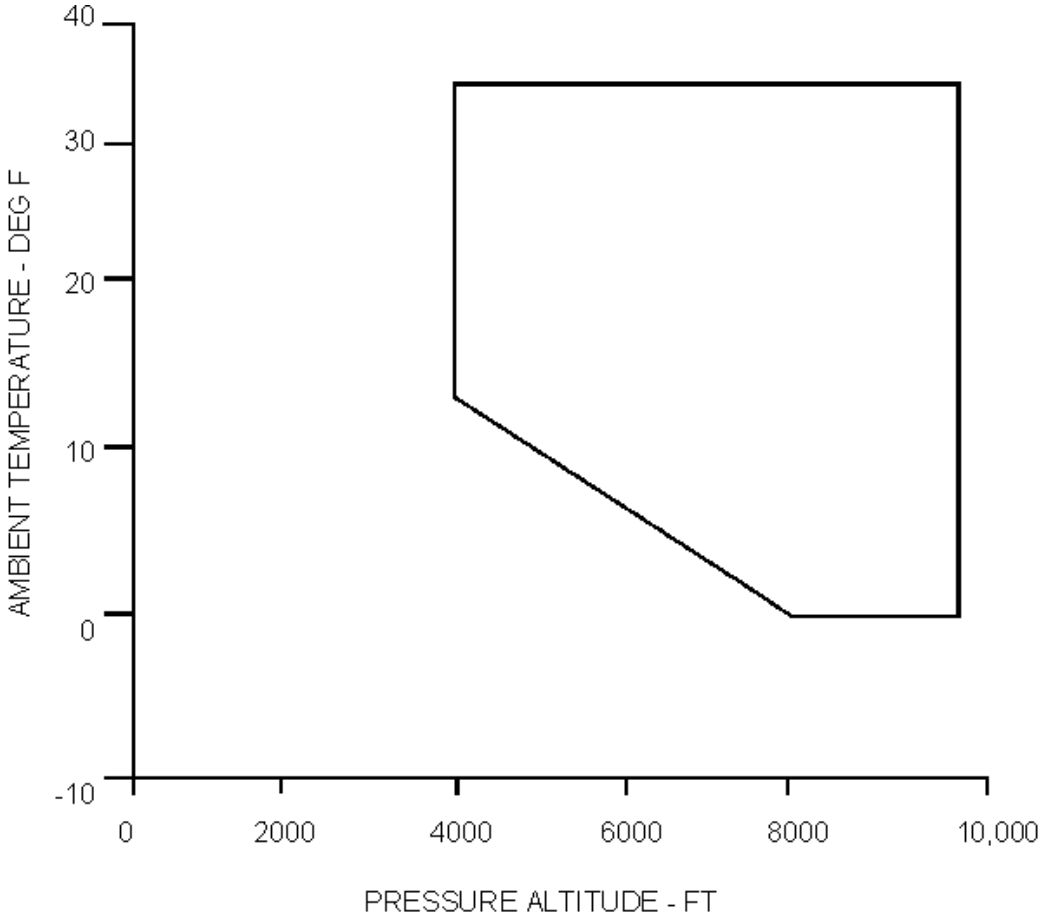

FIGURE AC 29.877-2 INTERMITTENT ICING - TEMPERATURE VS ALTITUDE LIMITS

Figures AC 29.877-1 through 4 represent one approach to a 10,000-foot altitude limit and Figure AC 29.877-5 represents another. See Paragraph 386b(5)(iii) for a discussion of the individual application of the two approaches

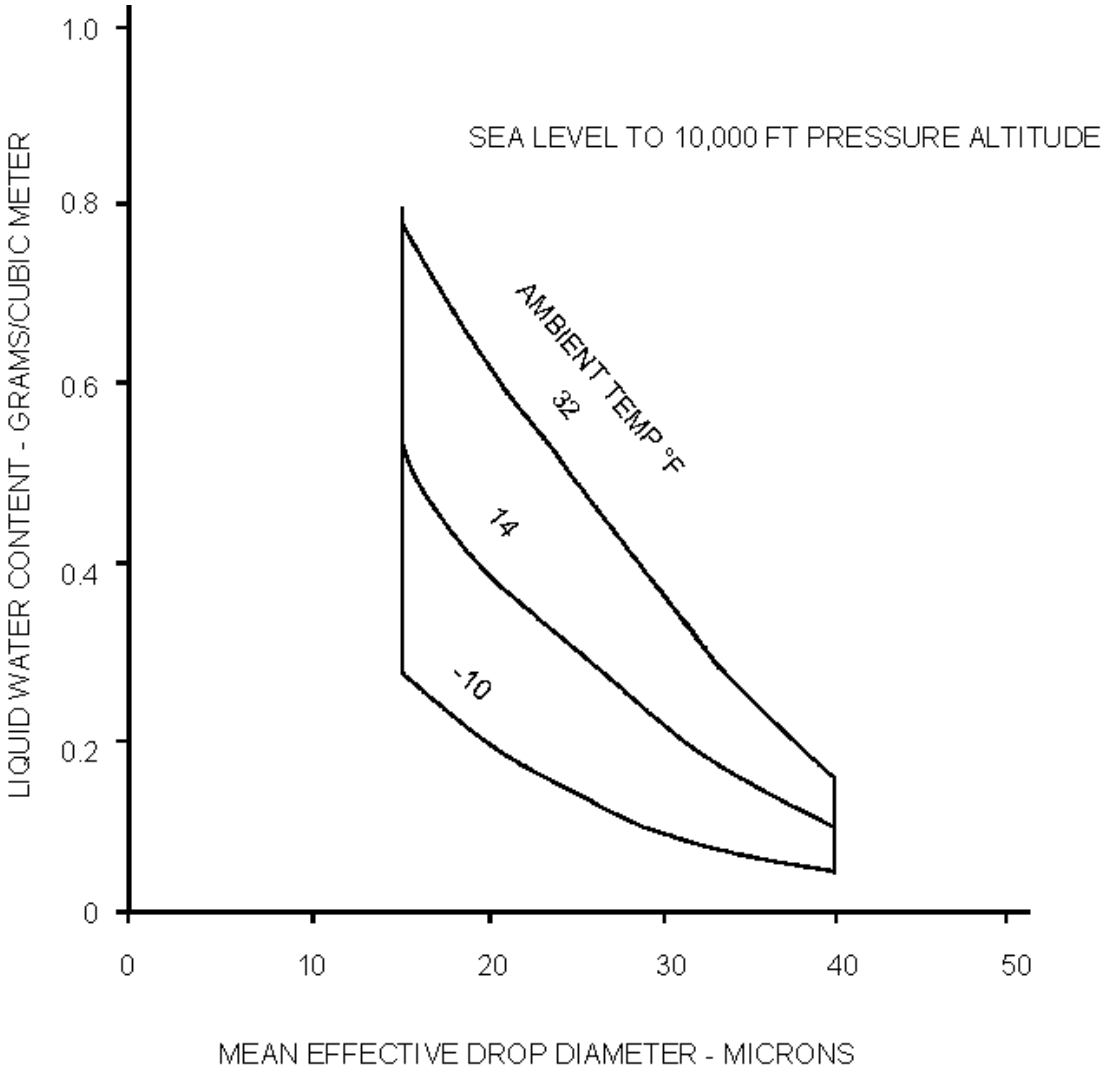

FIGURE AC 29.877-3 MEAN EFFECTIVE DROP DIAMETER - MICRONS

Figures AC 29.877-1 through 4 represent one approach to a 10,000-foot altitude limit and Figure AC 29.877-5 represents another. See Paragraph 386b(5)(iii) for discussion of the individual application of the two approaches.

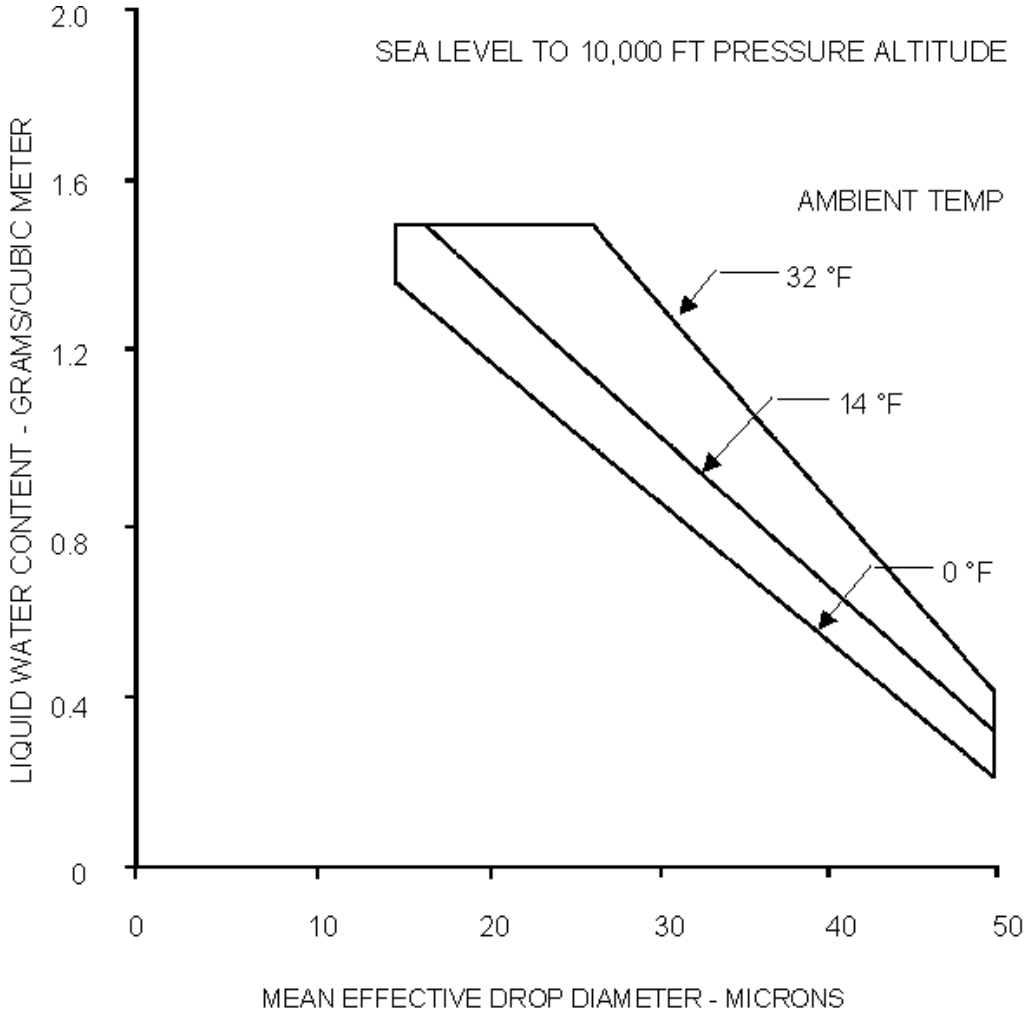

FIGURE AC 29.877-4 INTERMITTENT ICING - LIQUID WATER CONTENT VS DROP DIAMETER

Figures AC 29.877-1 through 4 represent one approach to a 10,000-foot altitude limit and Figure AC 29.877-5 represents another. See Paragraph 386b(5)(iii) for a discussion of the individual application of the two approaches.

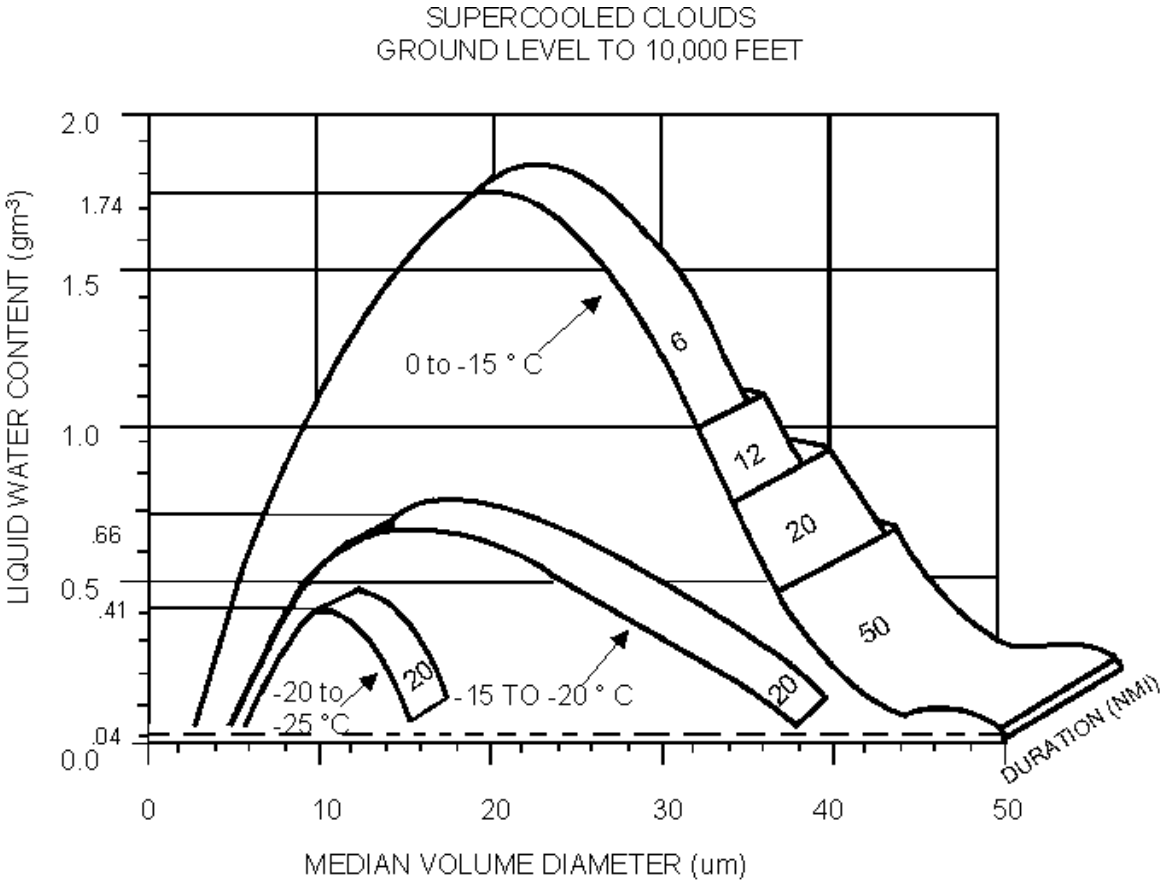

FIGURE AC 29.877-5

Figures AC 29.877-1 through 4 represent one approach to a 10,000-foot altitude limit and Figure AC 29.877-5 represents another. See Paragraph 386b(5)(iii) for discussion of the individual application of the two approaches.

CHAPTER 2. PART 29
AIRWORTHINESS STANDARDS
TRANSPORT CATEGORY ROTORCRAFT

SUBPART E - POWERPLANT

POWERPLANT - GENERAL

AC 29.901. § 29.901 (Amendment 29-17) INSTALLATION.

a. Section 29.901(a):

(1) Explanation. Paragraph (a) provides a definition of areas of rotorcraft for which safety requirements are set forth under the general title, SUBPART E - POWERPLANT. This subpart includes not only major propulsive elements and power transmissive components but also powerplant controls and instruments, safety devices, including fire protection and other devices to protect personnel, and critical flight structure in event of fires.

(2) Procedures. To ensure that no certification aspect is overlooked in establishing compliance, certification engineers should make at least an informal breakdown of all components of the rotorcraft, assigning responsibility to powerplant certification engineers of all items within the above definition. While this procedure is usually straightforward, the following items of FAA/AUTHORITY powerplant responsibility are listed to minimize questions regarding authority and responsibility.

(i) Drive system components. All parts of the transmission, clutches, shafting, including the driveshafts (masts) of main and auxiliary rotors, powerplant cooling components, and powerplant instrumentation requirements under §§ 29.1305, 29.1337, 29.1543, 29.1549, 29.1551, 29.1553, 29.1555, and 29.1583.

NOTE: The division of responsibility between FAA/AUTHORITY airframe engineers and FAA/AUTHORITY powerplant engineers (in accordance with FAA/AUTHORITY practice) regarding the driveshaft is at the flange or spline interface between the driveshaft and the rotor hub. Rotor hubs, controls, blades, and associated components are the airframe engineers' responsibility. (Industry practice may not agree with this concept.)

(ii) Engines, except for mount structure.

(iii) Auxiliary power units, except for mount structure.

(iv) Combustion heaters, except for downstream ventilation air ducting, mixing, and distribution systems and for electrical aspects of controls and safety devices.

(v) Water/alcohol or other fluid power augmentation systems.

(vi) Engine induction systems including induction icing and snow ingestion, and exhaust systems, including exhaust shrouds and drains.

(vii) All fuel systems, including those serving engines, auxiliary power units, combustion heaters, power augmentation systems, etc., and vents and drains for those systems.

(viii) Oil systems for engines, auxiliary power units, rotor drive transmissions, and gearboxes, including grease lubricated gears and bearings of the drive system.

(ix) Cooling aspects of engines, rotordrive transmissions and gearboxes, and auxiliary power units (APU). Electrical generating equipment and hydraulic component cooling may be the responsibility of the systems and equipment engineer provided agreement is established among responsible personnel.

(x) Rotor brakes, except hydraulic, electrical, and structural aspects of nonrotating brake components.

(xi) Fire protection, including firewalls, fire extinguisher systems, fire detector systems, flammable fluid lines, fittings, and shutoff valves. The powerplant engineer has responsibility for evaluating compliance with §§ 29.861 and 29.863 as they pertain to fuel and oil systems.

(xii) Engine and transmission cowling and covering, including latches.

(xiii) Powerplant flexible controls (reference § 29.1141(c)).

(xiv) Powerplant accessories.

(xv) Pneumatic systems (engine bleed air) within the engine or APU compartments, including shut-off valves and engine isolation features of bleed systems.

(xvi) Powerplant aspects of instrument markings and powerplant aspects of flight manuals, including limitations, normal and emergency procedures, engine performance; powerplant aspects of maintenance manuals, with emphasis on the limitations section of the manual and verification of the limitations established under § 29.1521.

b. Section 29.901(b):

(1) Explanation. Paragraph (b) requires compliance with the engine manufacturers' approved installation instructions and any applicable provisions of this subpart that the powerplant installation must be installed in a manner to ensure

continued safe operation, that accessibility for inspection and maintenance is provided, that appropriate electrical connections (ground connections) are provided, and that allowance is provided for thermal expansion of turbine engines.

(2) Procedures.

(i) Engine Installation. Compliance with most of the detail requirements in the engine installation manual can be established by test or by design features and arrangements negotiated between the rotorcraft manufacturer and the FAA/AUTHORITY powerplant engineer. Some aspects, usually involving inlet and/or exhaust distortion limitations, vibration limitations, and aircraft/engine interface items may require direct assistance and information from the engine manufacturer to determine that compliance with the installation manual exists. Fuel control/engine/rotor system torsional matching is usually a developmental problem to be worked out before presentation of the rotorcraft to the FAA/AUTHORITY; however, final flight tests for surge or stall, torsional stability, and acceleration/deceleration schedules may require direct coordination among FAA/AUTHORITY installation engineers, engine manufacturers' representatives, and the FAA/AUTHORITY engine certification engineers. These items are addressed specifically under § 29.939. Reciprocating, carburetor-equipped engines usually require a particular carburetor configuration to achieve adequate engine cooling. This configuration, identified as a "carburetor parts list," must be approved for the engine under Part 33 and should be listed with the engine on the type data sheet for the rotorcraft.

(ii) Arrangement and Construction. Each item of the powerplant area of responsibility should be shown to be suitable for its intended purpose and installed to operate satisfactorily and safely between normal inspections and overhauls. Accessories mounted on engine or transmission drive pads should be determined to be compatible with the pad limits including fit and speed range, overhang moment loads, running torque, and static torque. This latter term pertains to protection of the engine or transmission, which drives the accessory, from damage to be expected from malfunction of the accessory. This protection is usually supplied by providing a shear section in the accessory drive shaft designed to fail before exceeding the static torque limit of the engine or transmission driving component. Note that when evaluating the strength of the mechanical shear section, material allowables quoted in materials handbooks should not be used since these are minimum strength values. Shear sections should consider maximum strength values to be expected which are on the order of 130 percent of the minimum strength values. Also, it should be verified that design data for shear sections are dimensioned to limit the maximum diameter as well as the minimum diameter. Installation of starter-generators may also require verification that horsepower extraction limits are not exceeded. Special flightcrew instructions in the flight manual to monitor generator load or to disconnect electrically loaded items to protect accessory or engine-transmission pad limits should be avoided. Environmental qualification requires consideration or protection against adverse effects of heat, sand or dust, humidity and rain, salt-laden atmosphere, and extremes of cold weather. Accessories such as generators, pumps, etc., are subjected to many of these

aspects during the individual qualification tests; however, satisfactory overall integrated system performance under these adverse conditions should be verified. Cold weather testing should include verification that lubricating oils and greases function properly and that engine starting procedures are safe and do not impose excessive loads on accessories, engines, or drive system components. Powerplant engineers should coordinate compliance efforts in this area with the system engineer's investigations of compliance with §§ 29.1301 and 29.1309. Full-scale rotorcraft operations in cold weather should be required. Performance tests are required at the minimum temperature to be certified. Propulsion systems may usually be evaluated at this time. Cold soak or overnight exposure to cold weather is appropriate followed by starting and pretakeoff procedures in accordance with the flight manual. Attention should be given to the practicality of important mandatory inspection procedures as affected by cold weather.

(iii) Accessibility. Accessibility for maintenance should be reviewed. Typically, some maintenance activities must involve disassembly or removal of adjacent components. This should be avoided if repetitive activity can jeopardize the performance of critical or safety-related equipment. Verify that easy access exists to items such as oil system sight gauges or dip sticks, filler ports and drain valves for engines, auxiliary propulsion units, transmissions, fuel tanks and filters, etc.

(iv) Electrical (Grounding). Electrical interconnections to prevent difference of potential should be provided in the form of grounding straps or wires sized to carry the currents to be expected. Verify that the attachments for these grounding devices are not compromised by paint or zinc chromate which will tend to electrically insulate the engine or component. Note that engine mount structure should not be accepted as a grounding device since electrical current will cause corrosion at attachment points.

(v) Thermal Expansion. Axial and radial expansion of turbine engines is usually not a problem unless redundant mount arrangements are used. Special expansion provisions are usually required if engine components other than mounting points are attached to bulkheads, firewalls, other engines, or drive system components. Engine output shaft axial or bending loads due to thermal expansion and to deflection of supports under ground or flight loads should be checked. Other components of concern are compressor inlet flanges, exhaust ducts, and rigid fluid or air lines between aircraft structure and the engine. The engine installation data will provide limit loads to be considered for parts of the engine which normally are attached to airframe components.

c. Section 29.901(c):

(1) Explanation. Paragraph (c) requires, with notable exceptions, a detailed failure modes and effects analysis (FMEA) of the various powerplant systems and components to establish that anticipated failures will not jeopardize the safe operation of the rotorcraft. Alternative methods such as top-down analysis may also be used.

Exceptions include engine rotor discs and structural elements for which the probability of failure can be shown to be “extremely remote.” Items in this latter case would include all components of the rotor drive system evaluated under § 29.571 provided that the reliability of any item or system exempted under § 29.901(c)(1) is not jeopardized by the failure of other systems/components which themselves may be less reliable than “extremely remote.” Items of consideration here would include, but not be limited to, powerplant cooling systems, probable maintenance errors, deterioration/failure of seals and other time/temperature/weather sensitive nonmetallics, high energy fragment impact damage of nearby dynamic components, etc. Some items in these categories are addressed by specific rules in this subpart which override consideration under § 29.901(c). For example, § 29.927 sets forth specific tests to demonstrate acceptable safety levels in event of overtorque, overspeed, and transmission lubrication system failures. Further consideration of failures in these areas (under § 29.901(c)(1)) probably would be inappropriate. It would not, however, be appropriate to assume that an engine certified under Part 33, an auxiliary power unit qualified under TSO C-77, or other components qualified under various TSO’s or military specifications would not be subject to failure. As a general rule, any component or system whose failure is “probable” and the failure, in conjunction with probable combinations of failures, significantly degrades safe operation and/or impairs the capability of the crew to operate the rotorcraft safely constitutes an apparent noncompliance unless it is compensated for by alternate components, systems, or if appropriate, special operating procedures which essentially restore a safe level of operation of the rotorcraft. Normally, safe “continued” flight is intended; however, for the special case of the single-engine rotorcraft, safe entry into autorotation after engine failure is an acceptable means of compliance provided that other coincidental or associated failures or malfunctions do not jeopardize this maneuver.

(2) Procedures.

(i) The general techniques of AC 25.1309-1, System Design Analysis, present an acceptable means of evaluating the powerplant systems/components for compliance. However, the quantitative assessments of the probability classifications in AC 25.1309-1 have not been universally adopted for powerplant systems and components. Other procedural techniques in AC 25.1309-1 may be impractical for powerplant systems. This does not preclude using a similar but simplified methodology in conjunction with conservative engineering judgment to arrive at a determination of compliance or identification of noncompliance aspects, using the following as a guide (extracted from AC 25.1309-1). Develop a matrix of all applicable powerplant components/systems which includes:

(A) Possible modes of failure, including malfunctions and damage from external sources.

(B) The probability of multiple failures and undetected failures.

(C) The resulting effects of the rotorcraft and occupants, considering the stage of flight and operating conditions, and

(D) The crew warning cues, corrective action required, and the capability of detecting faults.

(ii) Prepare an item-by-item, system-by-system FMEA. The analysis to identify failure conditions should be qualitative. An assessment of the probability of a failure condition can be qualitative or quantitative. An analysis may range from a simple report which interprets test results or presents a comparison between two similar systems to a fault/failure analysis which may (or may not) include numerical probability data. An analysis may make use of previous service experience from comparable installations in other aircraft.

(iii) Powerplant engineers normally find that believable statistical failure data on powerplant components are not readily available. Therefore, the simpler form of analysis involving assumption of failure with either benign results or dependence on alternate or redundant systems/components becomes the most feasible method of finding compliance. Repetitive inspections and preflight checks are a significant part of this finding, particularly if the backup system/component is used or checked routinely in the operation of the rotorcraft.

d. Section 29.901(d):

(1) Explanation. This paragraph provides a generalized basis for requiring compliance with any rules in this Part applicable to safe installation and operation of auxiliary power units (APU's). The wording of the rule is generalized to permit (and require) a detailed review of this Part to identify any existing rule related to this type of equipment. Generally, any rule related to engines and their installation, support systems, and fire protection should be considered to be applicable to APU's. This review may result in a designation of "nonapplicable" to certain engine-related rules if limitations such as "ground-use-only" are applied or if the APU serves only nonessential services. Any questionable aspects or interpretation/policy involved in establishing the applicable rules should be coordinated with the FAA Aircraft Certification Office. Notwithstanding the generalization discussed above, a number of specific rules in subparts E and F include reference to APU's in their applicability. The presence of these references should not be interpreted as excluding applicability of other appropriate rules as discussed above. In addition, the APU itself must be shown to be safe and reliable. Normally, this aspect is satisfied by showing that the APU model is included in the qualified parts list of TSO-C77a. This TSO also requires establishment (by the APU manufacturer) of limitations and installation data peculiar to the model APU. A showing of compliance with these data for the APU installed in the rotorcraft will be expected.

(2) Procedures.

(i) Verify that the Model APU is listed as qualified to TSO-C77(a) or other suitable specifications. Note that TSO qualification is not regulatory but simply defines an acceptable base qualification standard. Other standards may be acceptable or deviations from the TSO may be acceptable if evaluated and found not pertinent to the planned installation.

(ii) Review the installation data provided for the APU and determine that the installation is in compliance. Exceptions may be taken as discussed above. Note that the TSO provides different qualification standards for “essential” and “nonessential” service APU’s. However, it does not distinguish between “flight-use” and “ground-use-only” APU’s. Some deviations to the TSO may be authorized based on this aspect; i.e., operation during negative “g” conditions.

(iii) Review Part 29, especially subparts E and F for all rules related to engines, engine support/service systems, intakes, exhausts, instrumentation, fire protection, pneumatic systems, etc., for applicability to installation and operation of the APU. Develop and accomplish a compliance program for the rules identified by this review following policy and procedures used for engines with exceptions which may be justified as discussed above.

(iv) For reference, the following rules specifically refer to APU’s. Some comments regarding compliance are offered.

(A) Section 29.1041, Cooling. APU installation data should define limits to be substantiated.

(B) Section 29.1091, Air Induction. Note the requirements of paragraph (f).

(C) Section 29.1103, Induction System Ducts. Note the special requirements of paragraphs (a), (e), and (f).

(D) Section 29.1121, Exhaust Systems.

(E) Section 29.1142, Controls.

(F) Section 29.1181, Designated Fire Zones.

(G) Section 29.1191, Firewalls. Firewall construction should be provided to completely separate the APU from other parts of the rotorcraft.

(H) Section 29.1195, Fire Extinguishers. Note that only one adequate discharge is required.

(I) Section 29.1203, Fire Detector Systems. Detectors are required for each fire zone which would include APU installations.

(J) Section 29.1305, Powerplant Instruments. TSO-C77(a) specifies provisions for measuring gas temperature, rotor RPM, and any other parameter necessary for safe operation of the APU.

(K) Section 29.1337, Powerplant Instruments.

(v) Additional comments. APU fuel sources which tap into engine fuel systems should be carefully designed and arranged to minimize the probability that an APU fuel line failure will jeopardize continued normal engine operation. If the APU provides essential services, it should be provided with an independent fuel system. Also, engine fuel systems which operate at negative pressures should not be tapped for APU fuel source since air leaks back through the APU fuel control or small leaks in the APU fuel system likely will fail the engine.

AC 29.901A. § 29.901 (Amendment 29-26) INSTALLATION.

a. Explanation. Amendment 29-26 changes § 29.901(b)(2) to require a satisfactory determination that rotorcraft can operate safely throughout adverse environmental conditions such as high altitude and temperature extremes. This amendment was needed to provide consistent application of environmental qualification aspects. This amendment also added a new paragraph § 29.901(b)(6) to require design precautions to minimize the potential for incorrect assembly of components and equipment essential to safe operation.

b. Procedures. All of the policy material pertaining to this section remains in effect with the addition of design precautions. Design precautions should be taken to minimize the possibility of improper assembly of components essential to the safe operation of the rotorcraft. Fluid lines, electrical connectors, control linkages, etc., should be designed so that they cannot be incorrectly assembled. This can be achieved by incorporating different sizes, lengths, and types of connectors, wires, fluid lines, and mounting methods.

AC 29.901B. § 29.901 (Amendment 29-36) INSTALLATION.

a. Explanation. Prior to Amendment 29-36, paragraph (c) exempted engine rotor disc failures (engine rotorburst) from consideration as a failure that could jeopardize the safe operation of the rotorcraft. Amendment 29-36 removes this exclusion. Therefore, engine rotor disc failures should be considered as a failure that would jeopardize the safe operation of the rotorcraft.

b. Procedures. The method of compliance for this section is unchanged.

AC 29.903. § 29.903 (Amendment 29-12) ENGINES.

a. Explanation. While paragraph (a) of this section requires engines to be type certificated under Part 33 of this chapter, engines certificated under other approved certification rules (CAR Part 13 and § 21.29 for imported engines) are also eligible. The fact that a component, system, or arrangement for which Part 29 standards exist is approved as a part of a certificated engine should not, except when specifically stated in Part 29, relieve an applicant of the necessity for compliance with Part 29. Even if the component, system, or arrangement supplied as a part of a certificated engine does meet the Part 29 standard, the possibility that subsequent changes to these components, systems, or arrangements by the engine manufacturer could negate compliance with Part 29 must be considered. For example, an engine may initially be equipped by the engine manufacturer with an oil tank filler cap that meets the Category A requirements of § 29.1013(c)(2) but is subsequently changed to a simpler and less expensive cap complying with § 33.71(c)(4). Continued monitoring of the engine configuration by the rotorcraft certification team would be needed to preclude an occurrence of noncompliance.

b. Procedures.

(1) Category A; Engine Isolation. This rule is one of the most significant safety rules in Subpart E of Part 29. Compliance involves a very extensive and rigorous evaluation not only of essentially all systems of the rotorcraft, but of the controls, both flight and powerplant, instruments, cockpit arrangement, cockpit switches, and operating procedures. A complete failure modes and effects analysis is involved. Section 29.903(b)(1) should be rigorously applied to rotorcraft engine control arrangements which utilize governors responding to main rotor speed to modulate power rather than power levers preset to produce equal or less than limit power. Section 29.903(b)(2) precludes “immediate action by any crewmember for continued safe operation.” This should be interpreted as requiring all powerplant systems to operate safely and continuously without crew attention (except to maintain flight using primary flight controls) in event of an engine failure from any cause, including fire. The collective is considered a primary flight control and not a powerplant control even though collective movement affects engine operation. No adjustment to powerplant controls or configuration can be allowed for certification purposes for performance credit or for safety. The time increment associated with “immediate” action may vary among different designs; however, it must not be less than that required to established engine-out flight profiles and climb rates associated with Category A performance. During critical takeoff flight regimes, flight translation to at least published takeoff safety speed is needed before crew attention can be mandated to modulate powerplant controls or change aircraft configuration (i.e., landing gear, power lever or rotorspeed governor setting, etc.) to achieve published flight performance. This does not mean crew action is prohibited--only that no credit for crew action can be allowed for any resulting improved performance in the performance section of the flight manual.

(2) Category A; Control of Engine Rotation.

(i) Means for stopping any engine in flight is to be considered unless it is shown that after critical failure of the engine, or components/accessories driven by the engine (not including rotor drive system components), no hazard results from rotation during the coast-down period. If continued rotation occurs, no hazard should result due to rotation during the period that the rotation is expected to continue. (Consider unbalanced rotors, bearing failures, accessory failures, lack of lubrication to other engine rotors, etc.) Note that after emergency engine shutdown, coast-down and continued rotation speed can be influenced by ram air flow into the compressor and, for multiengine rotorcraft, drag through the freewheeling unit.

(ii) A requirement exists for Category A rotorcraft to incorporate a means for restarting any engine individually in flight. Compliance is usually obtained during official flight tests and/or applicant tests in accordance with an approved test plan by requiring actual engine air-start demonstrations to define an acceptable restart envelope. These air-starts should be conducted at various altitudes, ambient temperatures, and fuel temperatures using the fuel type most critical, unless the applicant can show that this parameter is not pertinent. Other concerns involve the pilot station arrangement for flight controls and engine starting controls; i.e., verify that the engine start can be accomplished without jeopardizing continued safe operation of the rotorcraft, considering the pilot workload for the preexisting one-engine-inoperative situation, the location of the restart system controls, availability of a second pilot, etc. Also, verify that the emergency/malfunction instruction sections of the RFM present a detailed definition of the approved restart envelope and detailed instructions for the restart, including eligible ambient atmospheric conditions, prestart arrangement of fuel, electrical and pneumatic systems (as applicable), delay time between start attempts (to allow for waste fuel drainage), starter duty cycle (if different from ground start duty cycle), and prestart situation analysis (i.e., Should a restart be attempted in view of the cause for initial shutdown? Is inlet system ice ingestion a possibility? Is reignition of fuel in the engine nacelle a possibility? Is sufficient restart time available? Is power available and is altitude sufficient to maintain terrain clearance?). Although restart capability from an all-engines-out flight condition is not required, special instructions for restarting from this situation should also be included commensurate with the system capability to accomplish the starts.

(3) Although restart capability is required for only Category A rotorcraft, the applicant should be encouraged to provide air start instructions in accordance with the above criteria for both single and multiengine Category B rotorcraft, including all-engine-out instructions if reasonable and practicable.

c. Turbine Engine Installation.

(1) Explanation. The certification of turbine engines and particularly the qualification of turbine rotors assume that the limitations established during these certifications will be accurately and rigorously observed during ground and flight operations in an aircraft. This paragraph is intended to promote this concept.

(2) Procedures. Primary engine limitations in the form of time, gas temperature, torque, and rotational speed and their corresponding allowable transient values are defined in the approved engine installation manual. The rotorcraft manufacturer must provide reliable, accurate means to assure that these limitations are not exceeded. These means may be in the form of automatic limiters or by crew monitoring of appropriately marked instruments. The FAA/AUTHORITY powerplant certification engineer and the rotorcraft manufacturer's staff should verify these aspects by:

(i) Evaluating all applicable instrument, indicator, or warning devices, including transmitters, and limiting devices, if any, for system tolerances.

(ii) Closely reviewing the component qualification reports of items in c(2)(i) above to verify that these devices are properly qualified and that any deviations are acceptable.

(iii) Assuring that maintenance data are provided for functional checks and calibration of instruments and devices which are used to monitor or protect critical turbine rotor limitations. Preflight checks for automatic limiter devices may be appropriate.

(iv) Verifying that instrument markings are clear and relatively simple, that corresponding flight manual instructions and descriptions are straightforward and complete, and that instruments are located and orientated to minimize the probability of reading error.

AC 29.903A. §29.903 (Amendment 29-26) ENGINES.

a. Explanation. Amendment 29-26 adds § 29.903(a) that requires reciprocating engines used in rotorcraft to be certified in accordance with the rotorcraft engine testing requirements in § 33.49(d). This change is incorporated to ensure that certification requirements are not overlooked when reciprocating engines are installed in rotorcraft to be certified under Part 29 requirements. Section 29.903(b)(2) was revised to identify and clarify crew action; i.e., normal pilot action allowable with primary flight controls, in determining if adequate powerplant systems isolation is provided. This change 0eliminates any possible confusion that may exist regarding the acceptability of modifying optimum flight control manipulation to protect engine parameters. Section 29.903(c)(3) was added and requires engine restart capability to be available throughout the flight envelope appropriate to the rotorcraft. This will avoid the concept that an in-flight engine restart envelope constitutes acceptable compliance with this rule.

b. Procedures.

(1) Engine type certification. All engines installed in rotorcraft should have a type certificate. The specific certification requirements for installation of reciprocating engines in rotorcraft are found in Part 33. Engines certificated under other approved certification rules (CAR Part 13 and FAR § 21.29, for imported engines) are also eligible. If a component, system, or arrangement is certified under Part 33 or other requirement, the applicant is not relieved of the necessity to comply with the requirements of Part 29. If the component, system, or arrangement, supplied as a part of a certificated engine, meets the Part 33 and Part 29 requirements, subsequent changes to these components, systems, or arrangements could negate compliance with Part 29. For example, an engine may initially be equipped by the engine manufacturer with an oil tank filler cap that complies with the Category A requirements of § 29.1013(c)(2) but is subsequently changed to a simpler and less expensive cap that complies with § 33.71(c)(4). The airframe manufacturer should ensure that the requirements of § 29.1013(c)(2) are maintained.

(2) Category A: control of engine rotation. Section 29.903(c)(3) requires an engine restart capability which is appropriate to the rotorcraft. The minimum envelope for the restart capability should be equal to or better than the rotorcraft takeoff/landing maximum altitude and temperature limits. Compliance is usually shown by conducting actual in-flight restarts during flight tests and/or other tests in accordance with an approved test plan. Restarts should be conducted at various altitudes, ambient temperatures, and fuel temperatures using the fuel type most critical, unless the applicant can show that this parameter is not pertinent. Other concerns involve the pilot station arrangement for flight controls and engine starting controls. It should be verified that the engine start can be accomplished without jeopardizing continued safe operation of the rotorcraft. Pilot workload for a preexisting one-engine-inoperative situation, the location of the restart system controls, and the availability of a second pilot should be considered. The emergency/malfunction instruction sections of the rotorcraft flight manual (RFM) should present a detailed definition of the approved restart envelope and detailed instructions for the restart. Eligible ambient atmospheric conditions, prestart requirements (to allow for waste fuel drainage), starter duty cycle (if different from the ground start duty cycle), and prestart situation analysis should be included. The prestart situation analysis should consider the following questions:

- Should a restart be attempted in view of the cause for initial shutdown?
- Is inlet system ice ingestion a possibility?
- Is reignition of fuel in the engine nacelle a possibility?
- Is sufficient restart time available?
- Is power available?
- Is altitude sufficient to maintain terrain clearance?

Although restart capability from an all-engines-out flight condition is not required, special instructions for restarting from this situation should also be included commensurate with the system capability to accomplish the starts.

AC 29.903B. § 29.903 (Amendment 29-31) ENGINES.

a. Explanation. Amendment 29-31 clarified the requirements for control of engine rotation and in-flight restart of engines. Section 29.903(c)(1) was changed by adding the word “or” at the end of the paragraph, which provided an option on how to protect the engine stopping system from fire.

b. Procedures. All of the policy material pertaining to this section remains in effect. Additionally, the new § 29.903(e) requires that any engine should have a restart capability that has been demonstrated throughout a flight envelope to be certificated for the rotorcraft. The minimum restart envelope for Category A rotorcraft is discussed in paragraph AC 29.903A. The restart capability can consider windmilling of the engine as part of this restart capability; however, most rotorcraft airspeeds and the locations of the engines do not support engine windmilling up to start speeds. Only electrical power requirements were considered for restarting; however, other factors that may affect this capability are permitted to be considered. Engine restart capability following an in-flight shutdown of all engines is the primary requirement, and the means of providing this capability is left to the applicant.

AC 29.903C. § 29.903 (Amendment 29-36) TURBINE ENGINE INSTALLATION.

a. Explanation. Amendment 29-36 revises § 29.903(d) to require that design precautions should be taken to minimize hazards to the rotorcraft in the event of an engine failure. This advisory material sets forth a method of compliance with the requirements of §§ 29.901, 29.903(b)(1), and 29.903(d)(1) of the Federal Aviation Regulations (FAR) pertaining to design precautions taken to minimize the hazards to rotorcraft in the event of uncontained engine rotor (compressor and turbine) failure. It is for guidance and to provide a method of compliance that has been found acceptable. As with all AC material, it is not mandatory and does not constitute a regulation.

b. Procedures. Although turbine engine manufacturers are making efforts to reduce the probability of uncontained rotor failures, service experience shows that such failures continue to occur. Failures have resulted in high velocity fragment penetration of fuel tanks, adjacent structures, fuselage, system components and other engines of the rotorcraft. Since it is unlikely that uncontained rotor failures can be completely eliminated, rotorcraft design precautions should be taken to minimize the hazard from such events. These design precautions should recognize rotorcraft design features that may differ significantly from that of an airplane, particularly regarding an engine location and its proximity to another engine or to other systems and components.

(1) Uncontained gas turbine engine rotor failure statistics for rotorcraft are presented in the Society of Automotive Engineers (SAE) Report No.'s AIR 4003 (period 1976-83) and AIR 4770 (period 1984-89).

(2) The statistics in the SAE studies indicate the existence of some failure modes not readily apparent or predictable by failure analysis methods. Because of the variety of uncontained rotor failures, it is difficult to analyze all possible failure modes and to provide protection to all areas. However, design considerations outlined in this AC provide guidelines for achieving the desired objective of minimizing the hazard to rotorcraft from uncontained rotor failures. These guidelines, therefore, assume a rotor failure will occur and that analysis of the effects or evaluation of this failure is necessary. These guidelines are based on service experience and tests but are not necessarily the only means available to the designer.

c. Definitions.

(1) Minimize. Reduce to the least possible amount by means that can be shown to be both technically feasible and economically justifiable.

(2) Separation. Positioning of redundant critical structure, systems, or system components within the impact area such that the distance between the components minimizes the potential impact hazard. Redundant critical components should be separated within the spread angles of a rotor by a distance at least equal to either a ½ unbladed disk (hub, impeller) sector, or a 1/3 bladed disk (hub, impeller) sector with 1/3 blade height, with each rotating about its center of gravity (CG), whichever is greater (see figure AC 29.903C-6).

(3) Isolation. A means to limit system damage so as to maintain partial or full system function after the system has been damaged by fragments. Limiting the loss of hydraulic fluid by the use of check valves to retain the capability to operate flight controls is an example of "isolation." System damage is confined allowing the retention of critical system functions.

(4) Rotor.

(i) Rotor means the rotating components of the engine and APU that analysis, test results, and/or experience has shown can be released during uncontained failure with sufficient energy to hazard the rotorcraft.

(ii) The engine or APU manufacturer should define those components that constitute the rotor for each engine and APU type design. Typical rotors have included, as a minimum, disks, hubs, drums, seals, impellers, and spacers.

(5) Uncontained Engine or APU Failure (or Rotorburst). For the purposes of rotorcraft evaluations in accordance with this AC, uncontained failure of a turbine engine is any failure which results in the escape of rotor fragments from the engine or

APU that could create a hazard to the rotorcraft. Rotor failures of concern are those in which released fragments have sufficient energy to create a hazard to the rotorcraft. Uncontained failures of APU's which are "ground operable only" are not considered hazardous to the rotorcraft.

(6) Critical Component (System). A critical component is any component or system whose failure or malfunction would contribute to or cause a failure condition that would prevent the continued safe flight and landing of the rotorcraft. These components (systems) should be considered on an individual basis and in relation to other components (systems) that could be degraded or rendered inoperative by the same fragment or by other fragments during any uncontained failure event.

(7) Fragment Spread Angle. The fragment spread angle is the angle measured, fore and aft, from the center of the plane of rotation of the disk (hub, impeller) or other rotor component initiating at the engine or APU shaft centerline or axis of rotation (see figure AC 29.903C-1). The width of the fragment should be considered in defining the path of the fragment envelope's maximum dimension.

(8) Ignition Source. Any component that could precipitate a fire or explosion. This includes existing ignition sources and potential ignition sources due to damage or fault from an uncontained rotor failure. Potential ignition sources include hot fragments, damage or faults that produce sparking, arcing, or overheating above the auto-ignition temperature of the fuel. Existing ignition sources include items such as unprotected engine or APU surfaces with temperature greater than the auto-ignition temperature of the fuel or any other flammable fluid.

d. Safety Assessment.

(1) Procedure. Assess the potential hazard to the rotorcraft using the following procedure:

(i) Minimizing Rotorburst Hazard. The rotorburst hazard should be reduced to the lowest level that can be shown to be both technically feasible and economically justifiable. The extent of minimization that is possible will vary from new or amended certification projects and from design to design. Thus the effort to minimize must be determined uniquely for each certification project. Design precautions and techniques such as location, separation, isolation, redundancy, shielding, containment and/or other appropriate considerations should be employed, documented, agreed to by the certifying authority, and placed in the type data file. A discussion of these methods and techniques follows.

(ii) Geometric Layout and Safety Analysis. The applicant should prepare a preliminary geometric layout and safety analysis for a minimum rotorburst hazard configuration determination early in the design process and present the results to the certification authority no later than when the initial design is complete. Early contact and coordination with the certifying authority will minimize the need for design

modification later in the certification process. The hazard analysis should follow the guidelines indicated in paragraphs AC 29.901c(2) and AC 29.903Cd(6). Geometric layouts and analysis should be used to evaluate and identify engine rotorburst hazards to critical systems, powerplants, and structural components from uncontained rotor fragments, and to determine any actions which may be necessary to further minimize the hazard. Calculated geometric risk quantities may be used in accordance with paragraph d(4) following, to define the rotorcraft configuration with the minimum physical rotorburst hazard.

(2) Engine and APU Failure Model. The safety analysis should be made using the following engine and APU failure model, unless for the particular engine/APU type concerned, relevant service experience, design data, test results or other evidence justify the use of a different model. In particular, a suitable failure model may be provided by the engine/APU manufacturer. This may show that one or more of the considerations below do not need to be addressed.

(i) Single One-Third Disc Fragment. It should be assumed that the one-third disc fragment has the maximum dimension corresponding to one-third of the disc with one-third blade height and a fragment spread angle of ±3°. Where energy considerations are relevant, the mass should be assumed to be one-third of the bladed disc mass and its energy--the translational energy (i.e., neglecting rotational energy) of the sector (see figure AC 29.903C-2).

(ii) Intermediate Fragments. It should be assumed that the intermediate fragment has a maximum dimension corresponding to one third or the disc radius with one-third blade height and a fragment spread angle of ±5°. Where energy considerations are relevant, the mass should be assumed to be 1/30th of the bladed disc mass and its energy--the translational energy (neglecting rotational energy) of the piece traveling at rim speed (see figure AC 29.903C-3).

(iii) Alternative Engine Failure Model. For the purpose of the analysis, as an alternative to the engine failure model of paragraphs d(2)(i) and d(2)(ii) above, the use of a single one-third piece of disc having a fragment spread angle of ±5° would be acceptable, provided that the objectives of the analysis are satisfied.

(iv) Small Fragments. It should be assumed that small fragments have a maximum dimension corresponding to the tip half of the blade airfoil and a fragment spread angle of ±15°. Where energy considerations are relevant, the mass should be assumed to be corresponding to the above fragment dimensions and the energy is the translational energy (neglecting rotational energy) of the fragment traveling at the speed of its CG location. The effects of multiple small fragments should be considered during this assessment.

(v) Critical Engine Speed. Where energy considerations are relevant, the uncontained rotor event should be assumed to occur at the engine shaft speed for the maximum rating appropriate to the flight phase (exclusive of OEI ratings), unless the

most probable mode of failure would be expected to result in the engine rotor reaching a red line speed or a design burst speed. For APU's, use the maximum rating appropriate to the flight phase or the speed resulting from a failure of any one of the normal engine control systems.

(vi) APU Failure Model. Service experience has shown that some APU rotor failures produced fragments having significant energy to have been expelled through the APU tailpipe. For the analysis, the applicable APU service history and test results should be considered in addition to the failure model as discussed in paragraph d(2) above for certification of APU installations near critical items. In addition, the APU installer needs to address the rotorcraft hazard associated with APU debris exiting the tailpipe. Applicable service history or test results provided by the APU manufacturer may be used to define the tailpipe debris size, mass, and energy. The uncontained APU rotor failure model is dependent upon the design/analysis, test results and service experience.

(A) For APU's in which rotor integrity and blade containment have been demonstrated in accordance with TSO-C77a/JAR APU, i.e., without specific containment testing, paragraphs d(2)(i), d(2)(ii), and d(2)(iv) or paragraph d(2)(iii) and d(2)(iv) apply. If shielding of critical airframe components is proposed, the energy level that should be considered is that of the tri-hub failure released at the critical speed as defined in paragraph d(2)(v). The shield and airframe mounting point(s) should be shown to be effective at containing both primary and secondary debris at angles specified by the failure model.

(B) For APU rotor stages qualified as contained in accordance with the TSO, an objective review of the APU location should be made to ensure the hazard is minimized in the event of an uncontained APU rotor failure. Historical data shows that in-service uncontained failures have occurred on APU rotor stages qualified as contained per the TSO. These failure modes have included bi-hub and overspeed failure resulting in some fragments missing the containment ring. In order to address these hazards, the installer should use the small fragment failure model, or substantiated in-service data supplied by the APU manufacturer. Analytical substantiation for the shielding system if proposed is acceptable for showing compliance.

(3) Engine/APU Rotorburst Data. The engine or APU manufacturer should provide the required engine data to accomplish the evaluation and analysis necessary to minimize the rotorburst hazard such as:

(i) Engine failure model (range of fragment sizes, spread angles and energy).

(ii) Engine rotorburst probability assessment.

(iii) List of components constituting the rotors.

(4) Fragment Impact Risks. FAA/AUTHORITY research and development studies have shown that, for rotorcraft conventional configurations (one main rotor and one tail rotor), the main and tail rotorblades have minimal risks from a rotorburst, and thus, they require no special protection. However, unique main and tail rotor blade configurations should be carefully reviewed. Certain zones of the tail rotor drive shaft and other critical parts which may be necessary for continued safe flight and landing may not have natural, minimal risk from uncontained rotor fragments.

(5) Engine Service History/Design.

(i) For the purpose of a gross assessment of the vulnerability of the rotorcraft to an uncontained rotorburst, it must be taken that an uncontained engine rotor failure (burst) will occur. However, in determining the overall risk to the rotorcraft, engine service history and engine design features should be included in showing compliance with § 29.903 to minimize the hazard from uncontained rotor failures. This is extremely important since the engine design and/or the service history may provide valuable information in assessing the potential for a rotorburst occurring and this should be considered in the overall safety analysis.

(ii) Information contained in the recent SAE studies should be considered in this evaluation (see paragraph b(1) above).

(6) Certification Data File. A report, including all geometric layouts, that details all the aspects of minimizing the engine rotorburst hazards to the rotorcraft should be prepared by the applicant and submitted to the certification authority. Items which should be included in this report are the identification of all hazardous failures that could result from engine rotor failure strikes and their consequences (i.e., an FMEA or equivalent analysis) and the design precautions and features taken to minimize the identified hazards that could result from rotor failure fragment strikes. Thus an analysis that lists all the critical components; quantifies and ranks their associated rotorburst hazard; and clearly shows the minimization of that quantified, ranked hazard to the “maximum practicable extent” should be generated and agreed upon during certification. Critical components should all be identified and their rotorburst hazard quantified, ranked, and minimized where necessary. Design features in which the design precautions of this guidance material are not accomplished should be identified along with the alternate means used to minimize the hazard. To adequately address minimizing the hazards, all rotorcraft design disciplines should be involved in the applicant’s compliance efforts and report preparation.

e. Design Considerations. Practical design precautions should be used to minimize the damage that can be caused by uncontained engine and APU rotor debris. The following design considerations are recommended:

(1) Consider the location of the engine and APU rotors relative to critical components, or areas of the rotorcraft such as:

(i) Opposite Engine - Protection of the opposite engine from damage from 1/3 disc rotor fragments may not be feasible. Protection of the opposite engine from other fragments may be provided by locating critical components, such as engine accessories essential for proper engine operation (e.g. high pressure fuel lines, engine controls and wiring, etc.), in areas where inherent shielding is provided by the fuselage, engine, or other structure.

(ii) Engine Controls - Controls for the remaining engine(s) that pass through the uncontained engine failure zone should be separated/protected to the maximum extent practicable.

(iii) Primary Structure of the Fuselage.

(iv) Flight Crew - The flight crew is considered a critical component.

(v) Fuel system components, piping and tanks, including fuel tank access panels (NOTE: Spilled fuel into the engine or APU compartments, on engine cases or on other critical components or areas could create a fire hazard.)

(vi) Critical control systems, such as primary and secondary flight controls, electrical power cables, systems and wiring, hydraulic systems, engines control systems, flammable fluid shut-off valves, and the associated actuation wiring or cables.

(vii) Engine and APU fire extinguisher systems including electrical wiring and fire extinguishing agent plumbing to engine and APU compartments.

(viii) Instrumentation necessary for continued safe flight and landing.

(ix) Transmission and rotor drive shafts.

(2) Location of Critical Systems and Components. The following design practices have been used to minimize hazards to critical components:

(i) Locate, if possible, critical components or systems outside the likely debris impact areas.

(ii) Duplicate and separate critical components or systems if located in debris impact areas or provide suitable protection.

(iii) Protection of critical systems and components can be provided by using airframe structure where shown to be suitable.

(iv) Locate fluid shutoffs so that flammable fluids can be isolated in the event of damage to the system. Design and locate the shut-off actuation means in protected areas or outside debris impact areas.

(v) Minimize the flammable fluid spillage which could contact an ignition source.

(vi) For airframe structural elements, provide redundant designs or crack stoppers to limit the subsequent tearing which could be caused by uncontained rotor fragments.

(vii) Consider the likely damage caused by multiple fragments.

(viii) Fuel tanks should not be located in impact areas. However, if necessitated by the basic configuration requirements of the rotorcraft type to locate fuel tanks in impact areas, then the engine rotorburst hazard should be minimized by use of design features such as minimization of hazardous fuel spillage (that could contact an ignition source by drainage or migration); by drainage of leaked fuel quickly and safely into the airstream; by proper ventilation of potential spillage areas; by use of shielding; by use of explosion suppression devices (i.e., explosion resistant foam or inert gases); and by minimization of potential fuel ignition sources or by other methods to reduce the hazard.

(ix) The rotor integrity or containment capability demonstrated during APU evaluation to TSO-C77a, or JAR-APU should be considered for installation certification.

(x) The flight data recorder, cockpit voice recorder, and emergency locator transmitter, if required, should be located outside the impact zone when practical.

(xi) Items such as human factors, pilot reaction time, and correct critical system status indication in the pilot compartment after an uncontained engine failure has occurred should be considered in design to permit continued safe flight and landing.

(3) Rotorcraft Modifications. Modifications made to rotorcraft certified to this rule should be assessed with the considerations of this AC. These modifications include but are not limited to re-engining installations (including conversion from reciprocating to turbine powered), APU installations, fuselage stretch, and auxiliary fuel tank installations. Auxiliary fuel tank(s) should be located as much as practical so as to minimize the risk that this tank(s) will be hit by rotor failure fragments. The need to remain within the approved CG limits of the aircraft will of necessity limit the degree to which the risk may be minimized.

f. Protective Measures. The following list is provided for consideration as some measures which may be used to minimize effects of a rotorburst:

(1) Powerplant Containment.

(i) Engine Rotor Fragment Containment. It should be clearly understood that containment of rotor fragments is not a requirement. However, it is one of many options which may be used to minimize the hazards of an engine rotorburst. Containment structures (either around the engine, or APU, or on the rotorcraft) that have been demonstrated to provide containment should be accepted as minimizing the hazard defined by the rotor failure model for that particular rotor component. Contained rotor in-service failures may be used to augment any design or test data. Containment material stretch and geometric deformation should be considered in conjunction with fragment energies and trajectories in defining the hazards to adjacent critical components such as structures, system components, fluid lines, and control systems. Data obtained during containment system testing along with analytical data and service experience should be used for this evaluation.

(ii) APU Containment. Rotor integrity or containment capability demonstrated during APU TSO evaluation should be considered for installation certification. If rotor containment option was shown by analysis or rig test an objective review of the APU location should be made to ensure the hazard is minimized in the event of an uncontained APU rotor failure.

(2) Shields and Deflectors. When shields, deflection devices, or intervening rotorcraft structure are used to protect critical systems or components, the adequacy of the protection should be shown by testing or analysis supported by test data, using the impact area, fragment mass, and fragment energies based on the definitions stated herein. Analytical methods used to compute protective armor or shielding thicknesses and energy absorption requirements should reflect established methods, acceptable to the certifying authority, that are supported by adequate test evidence. Protective armor, shielding, or deflectors that stop, slow down, or redirect uncontained fragments redistribute absorbed energy into the airframe. The resulting loads are significant for large fragments and should be considered as basic load cases for structural analysis purposes (reference § 29.301). These structural loads should be defined and approved as ultimate loads acting alone. The protective devices and their supporting airframe structures should be able to absorb or deflect the fragment energies defined herein and still continue safe flight and landing. If hazardous, the deflected fragment trajectories and residual energies should also be considered.

(3) Isolation or Redundancy.

(i) Other Engines - Although other engines may be considered critical, engine isolation from rotorburst on multi-engine rotorcraft is not mandatory. Other methods of minimizing the risk to the engine(s) may be acceptable.

(ii) Other Critical Components - Isolation or redundancy of other critical components, the failure of which would not allow continued safe flight and landing

should be evaluated relative to the risk of occurrence and where the risk is deemed unacceptable isolation or shielding or other means of reducing the risk should be incorporated.

(4) Composite Materials. If containment devices, shields, or deflectors are chosen by the applicant to be wholly or partially made from composites; they should comply with the structural requirements of AC 20-107A, “Composite Aircraft Structure,” and paragraph AC 29 MG 8, “Substantiation of Composite Rotorcraft Structure,” (which includes glass transition temperature considerations). Glass transition temperature considerations are critical for proper certification of composite or composite hybrid structures used in temperature zones that reach or exceed 200° to 250°F (93° to 121°C) for significant time periods. Hot fragment containment is typically accommodated in such protective devices by use of metal-composite hybrid designs that use the metal component’s properties to absorb the fragment heat load after the entire hybrid structure has absorbed the fragment’s impact load. These devices should comply with §§ 29.609 and 29.1529 to ensure continued airworthiness.

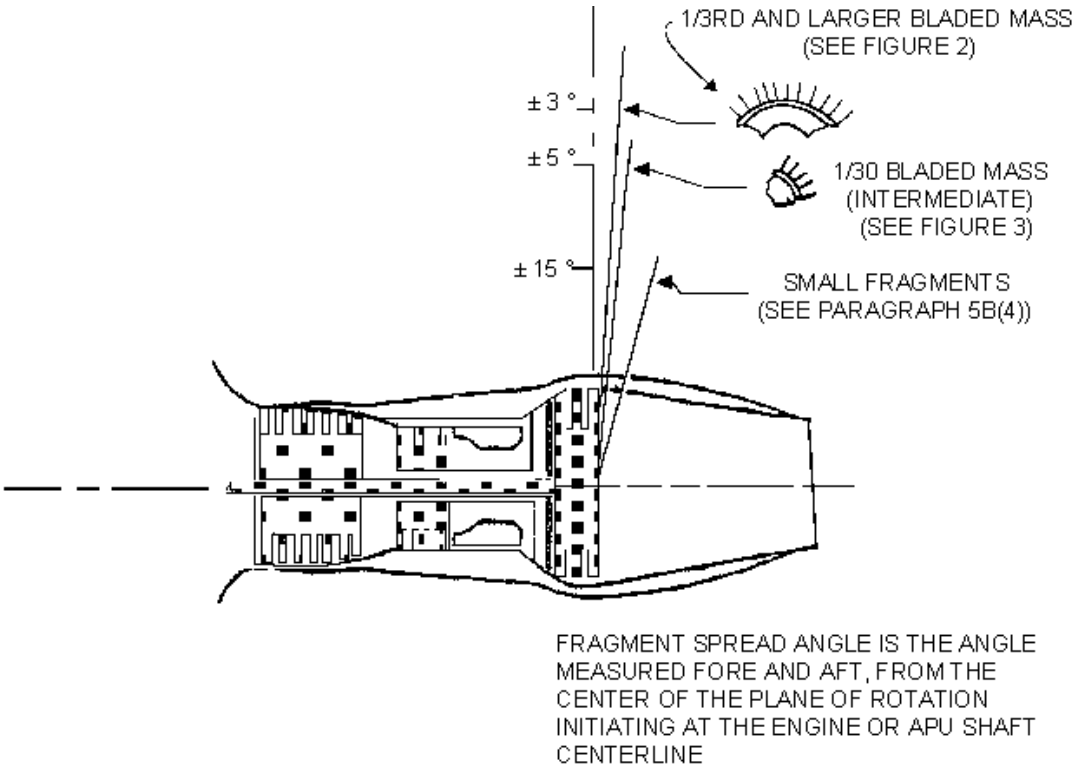

NOTE: 1) THE POSSIBILITY OF TURBINE MOVEMENT SHOULD BE CONSIDERED.

2) ALL ROTORS ARE CONSIDERED TO BE FULLY BLADED FOR CALCULATING MASS.

3) FAILURE OF EACH ROTOR STAGE SHOULD BE CONSIDERED.

FIGURE AC 29.903C-1 ESTIMATED PATH OF FRAGMENTS

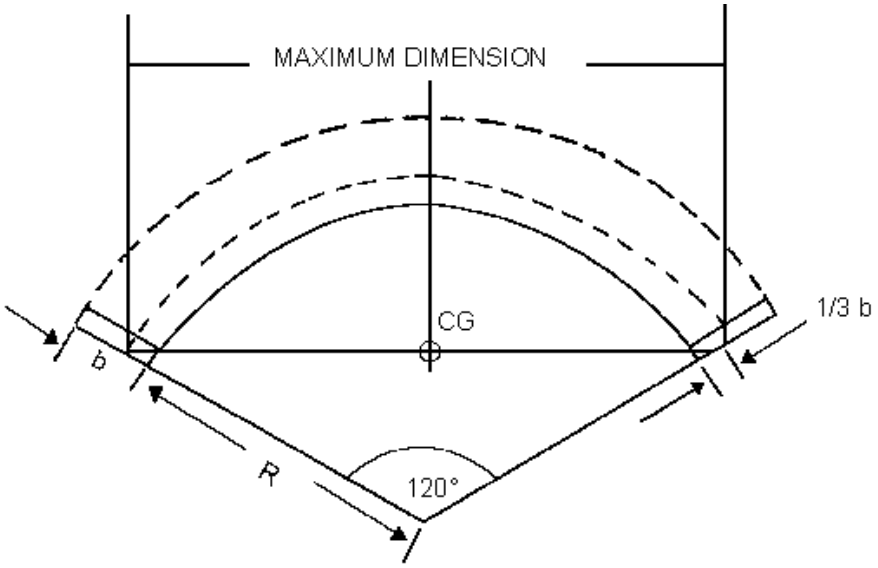

Where R = disc radius
b = blade length

The CG is taken to lie on the maximum dimension as shown.

FIGURE AC 29.903C-2. SINGLE ONE-THIRD DISC FRAGMENT

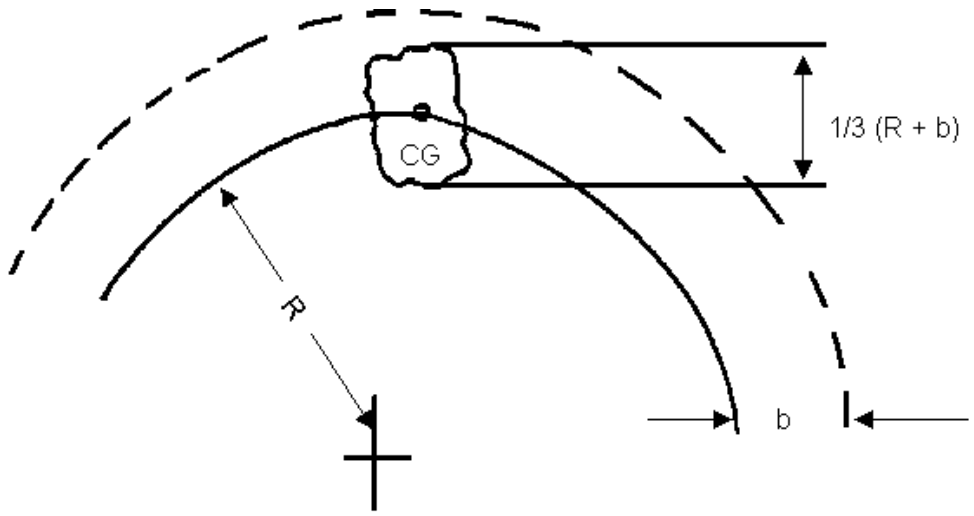

Where R = disc radius
b = blade length

Maximum dimension = 1/3 (R + b)

Mass assumed to be 1/ 30 th of bladed disc

CG is taken to lie on the disc rim

FIGURE AC 29.903C-3. INTERMEDIATE AND SMALL PIECES OF DEBRIS

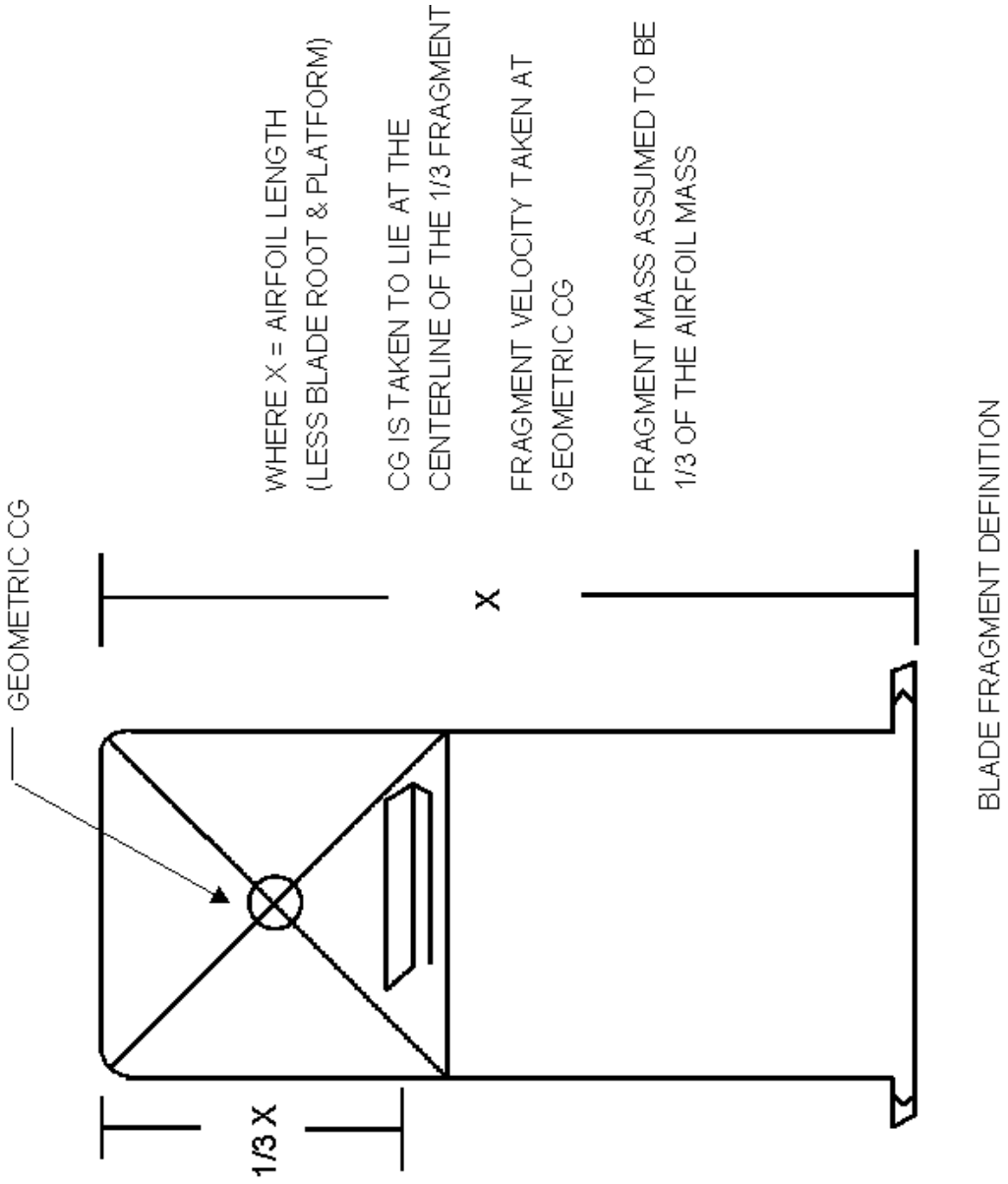

FIGURE AC 29.903C-4

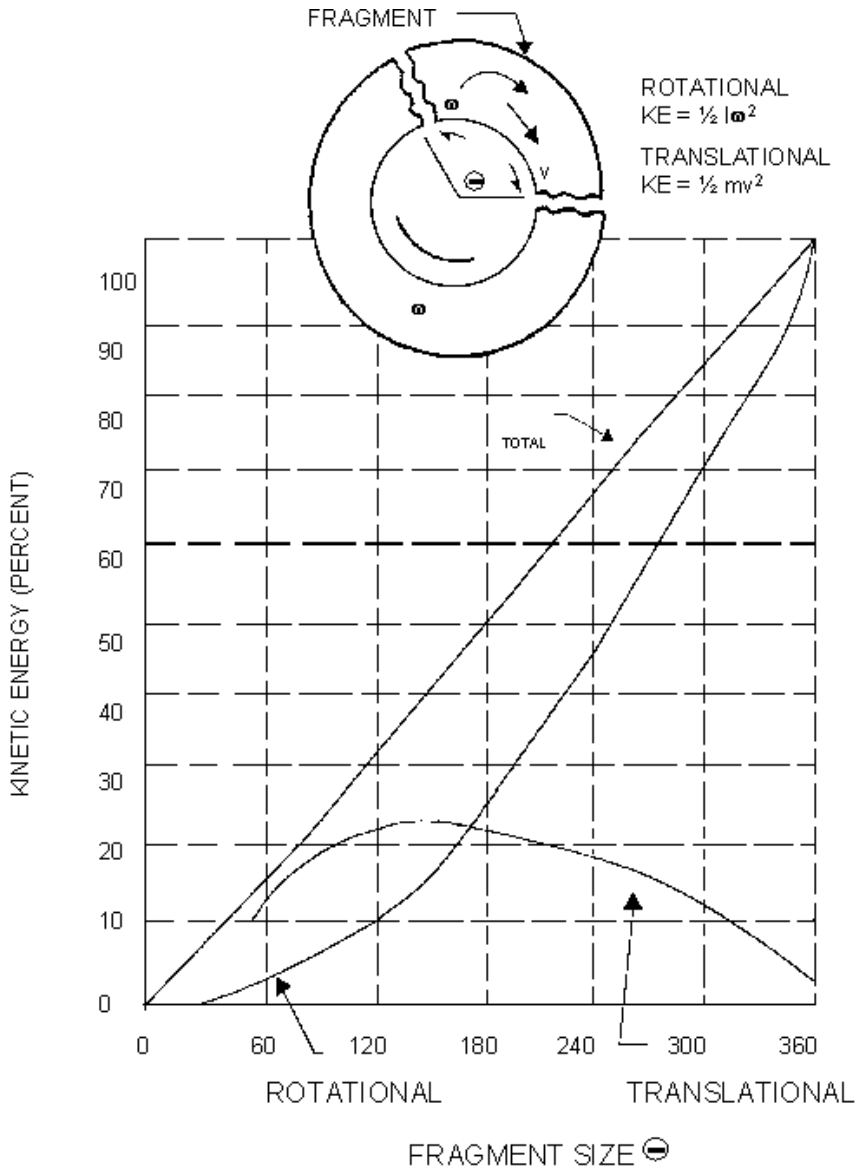

FIGURE AC 29.903C-5 DISTRIBUTION OF TRANSLATIONAL AND ROTATIONAL KINETIC ENERGY OF ROTOR-COMPONENT FRAGMENTS AS A FUNCTION OF FRAGMENT SIZE

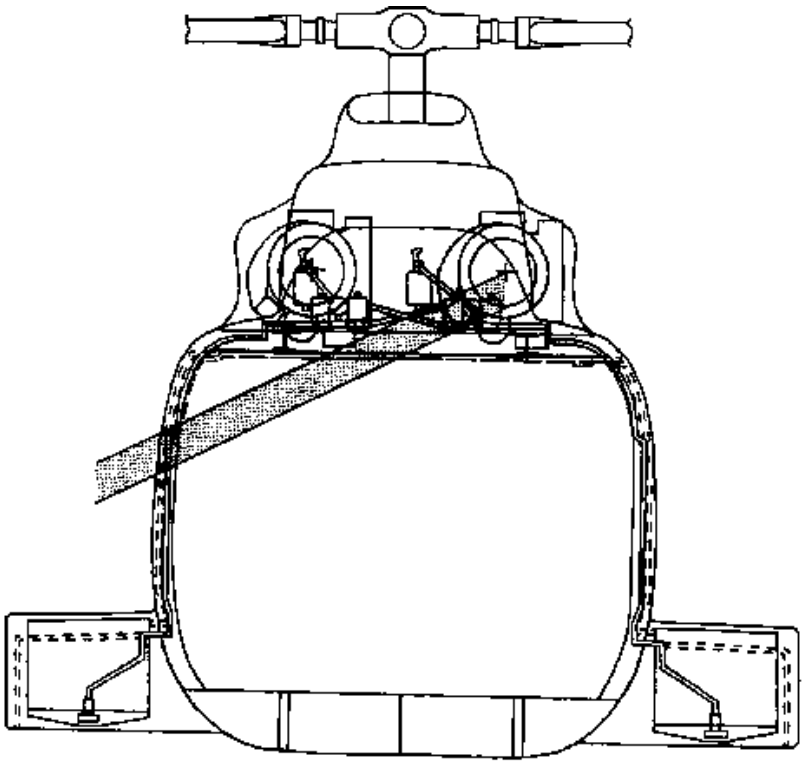

CG of Fragment Becomes
Center of Rotation of Fragment

For Separation Distance Calculations:
1/3 Rotor with
1/3 Blade Height

FIGURE 29.903C-6 CROSS SECTION THROUGH AIRCRAFT AT PLANE OF ROTATION OF THE ENGINE DISK FRAGMENT

AC 29.907. § 29.907 ENGINE VIBRATION.

a. Explanation. This very generalized requirement is authority to require substantiation of the effects of vibration on any part of the engine or the rotorcraft. In normal certification practice, the vibration effects of concern to the powerplant engineer are the vibratory loads or stresses in the engine and in the rotor drive system. Vibration effects on the rotor drive system are of concern if the corresponding loads or stresses result in fatigue damage. This aspect, however, is adequately addressed in § 29.571. Vibration effects on the engine are usually categorized as “installation vibration” and “torsional vibration.” Methods of evaluation and limitations of these vibrations are established by the engine manufacturer.

b. Procedures. Review Order 8110.9, Handbook on Vibration Substantiation and Fatigue Evaluation of Helicopter and other Power Transmission Systems. Note that the mechanical coupling of the engines to the rotor drive system creates, for torsional vibration considerations, one, rather complicated, drive system which responds to any forced or resonant frequency. Antinodes or nodes and frequencies may exist in the engine shaft which are absent when the engine is operated on a test stand; therefore, the vibration investigation conducted under Part 33 is not conclusive with respect to torsionals. As noted in Order 8110.9, the engine manufacturers’ assistance is necessary to find compliance. Section 29.571 was amended by Amendment 29-13 to include “rotor drive systems between the engines and the rotor hubs” as part of the flight structure. This rule supplements § 29.907 and requires coordination with the structures certification engineer to avoid duplication of effort by the rotorcraft manufacturer. Advisory Circular 20-95, Fatigue Evaluation of Rotorcraft Structure, which provides acceptable methods of compliance with § 29.571, may also be used to find compliance with § 29.907. In addition to basic drive system components such as main and auxiliary rotor drive shafts, the vibratory evaluation should include couplings, gear teeth, gear cases and splines, and should consider, where appropriate, low cycle fatigue associated with ground-air-ground cycles.

AC 29.908. § 29.908 (Amendment 29-13) COOLING FANS.

a. Section 29.908(a):

(1) Explanation. This paragraph applies to Category A rotorcraft and is intended to require that powerplant area cooling fans be designed and installed to enable continued safe operation of the rotorcraft after failure of a cooling fan blade. The phrase “except that the loss of cooling need not be considered” at the end of this paragraph is intended to make clear that for the purposes of this section, the FAA/AUTHORITY is concerned only with the fragmentation effect of a fan blade failure (reference Preamble Item 3-64 of Amendment 29-12).

(2) Procedures. If a fan shroud is provided, the applicant may demonstrate that the shroud configuration and strength are adequate to contain a failed fan blade and any other fan blades, guide vanes, etc., which can be expected to fail sequentially

to the initial blade failure. The demonstration can be facilitated by making a saw slot at the root of a blade sufficiently deep to weaken the blade retention strength and create a failure while the fan is rotating at the maximum speed established for the test. If the fan is driven by the rotor drive system, the test speed should be equal to or above the maximum transient speed to be expected with the rotor system. If the fan is driven by other means; i.e., bleed air turbine, hydraulic motor, engine N_1 turbine, etc., the rotational speed for the blade failure demonstration should be based on a critical analysis of speed regimes to be expected. Containment is not required if the fan is located so that blade failure (and any sequential fan component failure) will not jeopardize safety. This may be shown by test or analysis. Segment shielding would likely be involved.

b. Section 29.908(b):

(1) Explanation. This paragraph applies to Category B rotorcraft and is intended to provide safety to the rotorcraft in the event of an assumed cooling fan blade failure or to prescribe a test to show that the cooling fan blade retention means is sufficient that blade failure is not a consideration.

(2) Procedures.

(i) The applicant may select § 29.908(b)(1), (b)(2), or (b)(3) to show compliance with this section. If § 29.908(b)(1) is selected, follow the procedures outlined above for Category A rotorcraft.

(ii) Section 29.909(b)(2) may be selected; however, without containment, damage to any component or structure in the plane of the fan rotor or any other trajectory to be expected should not cause the loss of any function essential to a controlled landing.

(iii) If § 29.908(b)(3) is selected, a spin test at 122.5 percent of the maximum speed associated with either engine terminal speed or an overspeed limiting device would be acceptable to show compliance. No failure should occur, and distortion should not result in fan element contact with housings or other adjacent components. (Note: 150 percent of the centrifugal force is achieved at 122.5 percent of the rotational speed.)

AC 29.908A. § 29.908 (Amendment 29-26) COOLING FANS.

a. Explanation. Amendment 29-26 requires that cooling fans be designed and installed to enable continued safe flight and adequate cooling of the rotorcraft following a fan blade failure. Compliance with the previous requirements could have resulted in hazards to the rotorcraft with the loss of cooling air to critical powerplant components. A new section was also added to the rule for cooling fans, which are not part of the powerplant installation and therefore not subject to the fatigue evaluation under

§ 29.571. It should be determined that no cooling fan blade resonant conditions exist within the operating limits of the rotorcraft unless a fatigue evaluation is conducted.

b. Procedures. Neither mechanical damage nor loss of cooling air should prevent "continued safe flight." The definition of "continued safe flight" is contained in Appendix 1 of AC 20-136 and is quoted as follows:

> Continued safe flight and landing. This phrase means that the aircraft is capable of safely aborting or continuing a takeoff; continuing controlled flight and landing, possibly using emergency procedures but without requiring exceptional pilot skill or strength. Some aircraft damage may occur as a result of the failure condition or upon landing. For airplanes, the safe landing must be accomplished at a suitable airport. For rotorcraft, this means maintaining the ability of the rotorcraft to cope with adverse operating conditions and to land safely at a suitable site.

The FAA/AUTHORITY has determined that for Category A rotorcraft the phrase, "continued safe flight" means that the rotorcraft retains the capability to return and land safely at the point of departure or continue and land safely at the original intended destination or a suitable alternate site.

(1) This section is intended to ensure that a cooling fan blade failure will not jeopardize safety of the rotorcraft. Three ways to show compliance with this section are as follows:

(i) A demonstration should be conducted to show that at the maximum fan speed to be expected, a failed blade will be contained within a housing or shroud which is included in the proposed type design and is designated as the containment shield;

(ii) It should be shown that the installed cooling fan is located such that a blade failure will not jeopardize the safety of the rotorcraft or its ability to continue safe flight (Category A) or land safely (Category B); or,

(iii) It should be shown that the cooling fan blades can withstand an ultimate load 1.5 times the maximum centrifugal force that may be expected in service. The maximum centrifugal forces will occur at the maximum cooling fan rotational speeds. The maximum fan rotational speeds may be related to an overspeed limiting device or to the maximum transient speed to be expected from analysis or test of the engine, system, or component which drives the fan. The maximum rotational speed will be as follows:

(A) For fans driven directly by the engine:

(1) The terminal engine rotational speed that will occur under uncontrolled conditions; such as output shaft disconnect; or

(2) The maximum engine rotational speed that would be controlled by a reliable, approved engine overspeed limiting device.

(B) For fans driven by the rotor drive system, the maximum rotor drive system rotational speed to be expected in service including transients. (Note: Capability to withstand the ultimate load of 1.5 times the centrifugal force means that no failure would occur and distortion should not result in fan element contact with housings or other adjacent components during the 122.5 percent spin test which equates to 150 percent centrifugal force.)

(2) Fatigue. If the cooling fan is not included in the fatigue evaluation under § 29.571, it should be shown that the cooling fan blades are not operating at resonant conditions within the normal operating limits of the rotorcraft.

SUBPART E - POWERPLANT

ROTOR DRIVE SYSTEM

AC 29.917. § 29.917 (Amendment 29-12) DESIGN.

a. Section 29.917(a) General:

(1) Explanation. This paragraph sets forth a definition of the rotor drive system and its associated components. The intent of this paragraph is to clarify and/or establish the identification of components to be considered in other rules which are applicable to the rotor drive system.

(2) Procedures. Coordinate with other certification personnel to ensure that other rules pertaining to rotor drive systems are properly addressed.

b. Section 29.917(b) Arrangement:

(1) Explanation.

(i) Section 29.917(b)(1) pertains to multiengine rotorcraft and requires the drive system arrangement to be such that the rotors will continue to be driven by the remaining engines in order to ensure that lift and control to be expected from the rotors are available if an engine fails.

(ii) Section 29.917(b)(2) pertains to single-engine rotorcraft and is similar to the requirement of paragraph AC 29.917b(1)(i) except that it requires each rotor necessary for operation and control to be driven by the main rotor(s) after disengagement of the engine from the main and auxiliary rotors.

(iii) Section 29.917(b)(3) is intended to require a design which allows the rotor system to be protected from the torsional drag of an inoperative engine.

(iv) Section 29.917(b)(4) pertains to optional torque limiting means (shear sections or clutches) and prohibits these devices from being located in the cross-shafting system between rotors.

(v) Section 29.917(b)(5) is intended to ensure that the design prevents rotors from contacting each other if intermeshing is possible.

(vi) Section 29.917(b)(6) is intended to ensure that locking devices are installed to keep rotors in proper phase if dephasing is possible.

(2) Procedures.

(i) Section 29.917(b)(1) is normally complied with by cross-shafting between rotors, usually via one or more transmissions or gear boxes, to optimize the mechanical simplicity and weight aspects. Individual engine input arrangements are required.

(ii) Section 29.917(b)(2) may be complied with by cross-shafting between rotors. Usually this involves driving the antitorque rotor via a drive shaft from the main transmission.

(iii) Section 29.917(b)(3) may be complied with by installing “free-wheel” or “one-way” clutches in the engine output shaft or transmission input quill. Note that the output section of “free power turbine” engines is not an acceptable method of compliance.

(iv) Section 29.917(b)(4). Any torque limiting devices in the rotor system should be located in the engine output or transmission input quill to ensure that any disconnect from overtorque does not preclude continued normal function and relation of the rotors.

(v) Section 29.917(b)(5). Phase control of intermeshing rotors should utilize positive mechanical drive components. Deflections in both shafting (torsional) and rotors (blade chordwise bending) should be considered in establishing compliance.

(vi) Section 29.917(b)(6). Reconnection of dephased rotors should employ positive mechanical locking pins with secure locking methods.

AC 29.917A. § 29.917 (Amendment 29-40) DESIGN.

a. Explanation. Amendment 29-40 introduces a new § 29.917(b). The previous § 29.917(b) has been redesignated as § 29.917(c). FAR 29.917(a) sets forth a definition of the rotor drive system and its associated components and FAR 29.917(b) requires a design assessment to be performed. The intent of this paragraph (b) is to identify the critical components and to establish and/or clarify their design integrity to show that the basic airworthiness requirements, which are applicable to the rotor drive system, will be met.

b. Procedures.

(1) Section 29.917(a) General. The method of compliance for this section is unchanged.

(2) Section 29.917(b) Design Assessment. A design assessment of the rotor drive system should be carried out in order to substantiate that the system is of a safe design and that compensating provisions are made available to prevent failures classified as hazardous and catastrophic in the sense specified in paragraph (c) below. In carrying out the design assessment the results of the certification ground and flight

testing (including any failures or degradation) should be taken into consideration. Previous service experience with similar designs should also be taken into account (see also FAR 29.601(a)).

c. Definitions. For the purposes of this assessment, failure conditions may be classified according to the severity of their effects as follows:

(1) Minor. Failure conditions which would not significantly reduce rotorcraft safety, and which involve crew actions that are well within their capabilities. Minor failure conditions may include, for example, a slight reduction in safety margins or functional capabilities, a slight increase in crew workload, such as routine flight plan changes, or some inconvenience to occupants.

(2) Major. Failure conditions which would reduce the capability of the rotorcraft or the ability of the crew to cope with adverse operating conditions to the extent that there would be, for example, a significant reduction in safety margins or functional capabilities, a significant increase in crew workload or in conditions impairing crew efficiency, or discomfort to occupants, possibly including injuries.

(3) Hazardous. Failure conditions which would reduce the capability of the rotorcraft or the ability of the crew to cope with adverse operating conditions to the extent that there would be -

(i) A large reduction in safety margins or functional capabilities;

(ii) Physical distress or higher workload such that the flight crew cannot be relied upon to perform their tasks accurately or completely;

(iii) Serious or fatal injury to a relatively small number of the occupants;

(iv) Loss of ability to continue safe flight to a suitable landing site.

(4) Catastrophic. Failure conditions which would prevent a safe landing.

(5) Minimize. Reduce to the least possible amount by means that can be shown to be both technically feasible and economically justifiable.

(6) Health Monitoring. Equipment, techniques, and/or procedures by which selected incipient failure or degradation can be determined.

d. Failure Analysis.

(1) The first stage of the design assessment should be the Failure Analysis, by which all the hazardous and catastrophic failure modes are identified. The failure analysis may consist of a structured, inductive bottom-up analysis, which is used to evaluate the effects of failures on the system and on the aircraft for each possible item

or component failure. When properly formatted it will aid in identifying latent failures and the possible causes of each failure mode. The failure analysis should take into consideration all reasonably conceivable failure modes in accordance with the following:

(i) Each item/component function(s).

(ii) Item/component failure modes and their causes.

(iii) The most critical operational phase/mode associated with the failure mode.

(iv) The effects of the failure mode on the item/component under analysis, the secondary effects on the rotor drive system and on the rotors, on other systems and on the rotorcraft. Combined effects of failures should be analyzed where a primary failure is likely to result in a secondary failure.

(v) The safety device or health monitoring means by which occurring or incipient failure modes are detected, or their effects mitigated. The analysis should consider the safety system failure.

(vi) The compensating provision(s) made available to circumvent or mitigate the effect of the failure mode (see also paragraph (1) below).

(vii) The failure condition severity classification according to the definitions given in paragraph (c) above.

(2) When deemed necessary for particular system failures of interest, the above analysis may be supplemented by a structured, deductive top-down analysis, which is used to determine which failure modes contribute to the system failure of interest.

(3) Dormant failure modes should be analyzed in conjunction with at least one other failure mode for the specific component or an interfacing component. This latter failure mode should be selected to represent a failure combination with potential worst case consequences.

(4) When significant doubt exists as to the effects of a failure, these effects may be required to be verified by tests.

e. Evaluation of Hazardous and Catastrophic Failures.

(1) The second stage of the design assessment is to summarize the hazardous and catastrophic failures and appropriately substantiate the compensating provisions which are made available to minimize the likelihood of their occurrence. Those failure conditions that are more severe should have a lower likelihood of occurrence

associated with them than those that are less severe. The applicant should obtain early concurrence of the cognizant certificating authority with the compensating provisions for each hazardous or catastrophic failure.

(2) Compensating provisions may be selected from one or more of those listed below, but not necessarily limited to this list.

(i) Design features; i.e., safety factors, part-derating criteria, redundancies, etc.

(ii) A high level of integrity.

(iii) Fatigue tolerance evaluation.

(iv) Flight limitations.

(v) Emergency procedures.

(vi) An inspection or check that would detect the failure mode or evidence of conditions that could cause the failure mode.

(vii) A preventive maintenance action to minimize the likelihood of occurrence of the failure mode, including replacement actions and verification of serviceability of items which may be subject to a dormant failure mode.

(viii) Special assembly procedures or functional tests for the avoidance of assembly errors which could be safety critical.

(ix) Safety devices or health monitoring means beyond those identified in paragraphs (vi) and (vii) above.

AC 29.921. § 29.921 ROTOR BRAKE.

a. Background. Rotor brake safety requirements are intended not only to prevent adverse effects on aircraft performance due to brake drag but also to minimize the possibility of fires. These fires, caused by friction from a dragging rotor brake, have occurred both in flight and during ground operation with extremely hazardous consequences.

b. General. This rule requires (1) that any limitations on the use of the rotor brake must be established, and (2) that the control for the brake must be guarded to prevent inadvertent operation.

c. Limitations.

(1) The limitations on the use of the rotor brake should first be defined by the applicant and will normally consist of merely the maximum rotor speed eligible for application of the brake. In some installations, limitations associated with engine operation may be specified. For example, some “free power section” type turbine engines can be safely operated within certain low limits with the rotor brake engaged, while other engines cannot tolerate this condition. At least one manufacturer has included a maximum rotor speed for emergency rotor brake application. This is considered an enhancing safety consideration and is recommended.

(2) Control guard mechanisms to prevent inadvertent operation may be conventional. A cockpit evaluation should be conducted by flight test personnel to affirm the function of the guard and the brake, and that markings, if any, are adequate and that both latched and unlatched positions of the control do not interfere with other cockpit functions.

d. General qualification aspects should include:

(1) The 400 applications required by § 29.923(j) conducted as a part of the § 29.923 endurance test.

(2) Torsional vibration measurements of the loads in the brake components and the rotor drive system during a critical brake engagement procedure, with appropriate consideration in the fatigue evaluation for these components. Brake engagements should be conducted with and without collective control displacement as authorized by the flight manual or a training manual.

(3) Brake component temperature measurements during a critical brake application in conjunction with an evaluation of the general brake compartment for compliance with §§ 29.863 and 29.1183.

(4) Placards, decals, and flight manual limitations and instructions appropriate to operate the rotor brake safely.

(5) An evaluation for hazardous failure modes as required by § 29.901(c). If the brake hydraulic system is integral with the rotorcraft hydraulic system, failure modes of pressure regulators and control valves, including valve leakage, will be of interest. Mechanical cams, calipers, and levers may be prone to seize or fail to release the brake due, in part, to corrosion and lack of lubrication to be expected when brake components encounter high temperature cycling.

NOTE: Most rotor brakes include nonmetallic pucks or liners, usually included in nonrotating brake components, which are subject to wear in proportion to the number of applications. Replacement of these pucks during the § 29.923 endurance test has been found acceptable provided the reason for replacement is simply wear and not because of any change in brake loading, disk temperature, or vibratory characteristics

which can be expected in service. Verify that the maintenance manual includes a routine check for excessive puck or liner wear.

e. Other comments. Rotor brakes may be added to the basic design as a postcertification program without necessarily reconducting the complete § 29.923 endurance test provided:

(1) Steady and vibratory stresses in brake components, the rotor drive system, and in the rotor system itself are determined and shown to be acceptable.

NOTE: Moments, stresses, etc., from brake operation apply loads to the drive system in the reverse direction to normal powered flight. Advise the airframe engineer to require evaluation of chordwise bending loads in the hub and blade components of the main rotor system.

(2) The 400 brake engagements of § 29.923(j) should be accomplished with a complete rotor and rotor drive system, followed by disassembly sufficient to verify that all components subject to loads from the brake remain serviceable. Since this test may be so short as not to cause appreciable wear patterns to appear, special pretest coatings such as black oxide or Du-Lite may be needed on gear teeth and bearing races to distinguish and evaluate the contact patterns. Information on maximum deceleration rates should be supplied to the manufacturer of the engines to be used in the rotorcraft for evaluation of the acceptability of backloading or motoring of turbines, fuel control components, torque meters, etc.

AC 29.923. § 29.923 (Amendment 29-17) ROTOR DRIVE SYSTEM AND CONTROL MECHANISM TESTS.

a. Explanation.

(1) This rule is intended to require demonstration that the rotor drive system, as defined in § 29.917(a), is capable of normal operation within the limitations proposed, without hazard of failure from excessive wear or deterioration due to mechanical loads. The basic test is not designed and should not be expected to demonstrate safety from oscillatory stresses normally investigated under §§ 29.571 and 29.907, although any data generated by these tests, which are in fact applicable to showing compliance with §§ 29.571 and 29.907, may be used. Some variations in the endurance test plan to generate data applicable to the vibration substantiative effort or other qualification aspects may be acceptable if the basic requirements of the endurance test are preserved.

(2) The construction of this rule is such that a series of runs, each at least (but not limited to) 10 hours in length must be repeated 20 times, for a total of (at least) 200 hours of test, not including time required to adjust power or to stabilize operating conditions for those conditions that require stabilization. Extension of the total test beyond 200 hours (or extension of test runs beyond 10 hours) will occur if qualification

for the 2½-minute one-engine-inoperative (OEI) optional rating is proposed by the applicant. The 30-minute OEI rating qualification test will extend the test beyond 200 hours for rotorcraft equipped with three or more engines. Also, compliance with § 29.923(g) may result in extended endurance tests if dynamic or malfunction conditions exist which adversely affect the endurance tolerance of the rotor drive system. Section 29.923(a) should be interpreted as requiring test runs or cycles to be repeated in essentially the same sequence, although more than 10 hours may be needed to complete a run or cycle. This section also requires the test to be conducted "on the rotorcraft." This means a rotorcraft in conformity to the design for which approval is requested. However, many nonconformity features, such as doors, some cowling and instrumentation, fuel tanks (alternate external fuel supply may be utilized), interior features, fire detectors, extinguishers, inlet ducts, exhaust baffles, etc., may be acceptable provided each item is technically considered and found to be unimportant to the test results. Any significant deviations from the conformed rotorcraft configuration should be coordinated with the cognizant FAA/AUTHORITY engineering staff and if found acceptable, documented as such. The restraint (tie-down) arrangement used during the test will necessarily be arranged to react rotor thrust loads in lateral as well as vertical directions. However, the restraint should permit normal deflections due to rotor thrust in the engine and drive system support arrangement.

(3) Safety cables may be installed normal to the tail boom at the tail rotor gearbox location; however, restraint may be provided to keep airframe deflections from exceeding those expected in normal and accelerated flight.

(4) The test torque requirements of § 29.923(a)(3)(i) mean the torque values for which approval is requested but not to exceed the values approved for the respective limits for the engine to be used. However, an applicant should be allowed to qualify the rotor drive system for torque values higher than those for which approval is requested if the engines actually used are capable of the torque and can be shown by an output shaft torsional investigation to be equivalent or conservative with respect to torsional vibration to the engines proposed for the initial certification configuration. Variations in rotational speed from the certification values should not be allowed except where careful evaluation of vibration aspects, bearing loads, centrifugal stiffening effects, and torque variations are conducted.

(5) The rotor configuration required by § 29.923(a)(3)(ii) is intended to assure that lift, torque, and vibration loads to be expected in service are introduced into the endurance test, although the presence of the vibration aspects does not normally satisfy the vibration evaluations required by §§ 29.571 and 29.907. In fact, vibration modes may be changed and amplified by the tie-down restraints and the increased thrust to be expected from in-ground effects on the rotor system. These effects, although unquantified, are intended as a normal part of endurance testing. Preproduction rotor blades have been successfully used in endurance tests but only after specific investigations of blade properties such as stiffness, inertia and inertia distribution, thrust and blade bending, and torsional frequency response have been carefully compared to assure validity of the test. The endurance test includes testing of

the rotor control mechanism. Conformity of the rotors may be very significant to this aspect of the test.

b. Procedures.

(1) Section 29.923(b)(1) prescribes the takeoff portion of the endurance test. This test involves a series of 5-minute repetitive runs at the torque and at the engine/rotor rotational speed selected by the applicant for the takeoff limit for the rotorcraft. These values of torque (manifold pressure, for reciprocating engines) and RPM should correspond to the red radials on the corresponding powerplant instruments, except on installations where uncompensated engine governor “droop” results in a higher rotational speed for lower powers. The requirement in this section for declutching the engine may be difficult to achieve if engine deceleration and rotor system deceleration rates are similar. In some cases, the engine fuel control deceleration schedule may be adjusted to achieve clutch disengagement, otherwise, an engine shaft brake mechanism may be needed.

(2) The torque and speed requirements for the optional 2½-minute one-engine-inoperative (OEI) tests should be interpreted as described above for the takeoff runs. If the test is conducted during warm ambient conditions, excessive engine gas temperatures may be required to achieve the torque and speed conditions required by this part of the test. Minor adjustments in the run schedule may be allowed to take advantage of cooler nighttime ambient temperatures. Addition of water/alcohol systems to increase engine hot-day power may be appropriate in some instances. Liquid nitrogen spray into engine inlets has also been used to depress inlet temperatures sufficiently to obtain test conditions.

(3) In § 29.923(c), (d), (e), and (f), the torque requirements should be interpreted as above; i.e., the run should be made with maximum continuous torque or percentage thereof, as specified by the subparagraph, and the rotational speed should be maximum continuous for paragraph (d) and the lowest permissible “power-on” speed for paragraphs (e) and (f). Rotor control cycling must be accomplished during the “maximum continuous” portion of the endurance run. The controls of concern are the flight controls; i.e., cyclic and directional controls for rotorcraft with tail rotor and single main rotor. The collective control is normally used to set power and is not involved in control cycling. During control cycling the controls may be cycled from stop to stop, or a limited travel may be accepted if the travel produces the maximum fore and aft, left and right, and yaw thrust components of the rotors as measured in flight. One method of determining the required control displacement is to measure main rotor mast bending in level forward flight at maximum continuous power for the forward control displacement limit, and in level rearward flight at maximum continuous power (or the power associated with the maximum rearward flight speed to be expected) for the aft control displacement limit. Using the same mast bending instrumentation, with the rotorcraft in the ground tie-down situation, and with collective control set for maximum continuous power, displace the cyclic fore and aft to obtain the same mast bending as measured in flight. Similar measurements and control displacements may be used for sideward

thrust components. Yaw control displacement should consider maneuver requirements in conjunction with sideward flight. Critical gross weight and center of gravity should be used to establish test conditions. These same procedures may be used to establish limited control positions required to comply with § 29.923(i) except that typical flight conditions to be used would be stabilized level flight at maximum continuous power, climb at maximum continuous power, and hovering, including stabilized sideward and rearward flight. Note that for § 29.923(i)(1) vertical thrust is required. Depending on the mast angle and center of gravity, this condition may not necessarily involve zero mast bending loads. Vertical thrust may be used during the takeoff run, including the runs at 2½-minute power and the overspeed run of § 29.923(h). One-engine-inoperative runs (§ 29.923(k)) should be conducted with the cyclic set for maximum forward thrust. For these runs and any run that does not specify the position for the yaw control, that control should be set to react main rotor torque.

(4) Section § 29.923(g) provides for introducing special tests into the endurance tests to demonstrate that the transmission and drive system can tolerate certain engine malfunctions to be expected. This was originally directed at demonstrating safety in the event of spark plug or magneto failures of reciprocating engines. Turbine engines normally do not exhibit failure modes suitable for substantiation by endurance testing; however, severe or abusive operating conditions which must be expected to occur in service should be defined and included in this test. Conditions or phenomena to be considered should include but not be limited to moderate engine surge, abusive clutch engagements, torque mismatching, anticipated control mishandling, and so forth. Alternatively, repeating the takeoff run of § 29.923(b) may be appropriate. It is not intended that the special testing for 2½-minute power be repeated if a rerun of the takeoff power run is required by § 29.923(g).

(5) Section 29.923(h) requires overspeed testing at the torque which will produce maximum continuous power and at the maximum rotational speed to be expected. Normally this would be the maximum transient, power-on rotor speed available with speed controls operating. Special control adjustments for test purposes may be needed to achieve the required test conditions.

(6) Section 29.923(i) requires stabilized flight control displacement according to a prescribed schedule. The control displacement should be the same as derived to show compliance with § 29.923(c)(2).

(7) Section 29.923(j) requires 400 clutch and brake engagements. These tests are prescribed to establish a level of reliability of clutch and brake components installed as a part of the rotor drive system of rotorcraft. The clutch tests apply to all clutches installed to comply with § 29.917(b)(3), and each such clutch must be tested. A rotor brake is not required for certification, although a brake of some type may be installed temporarily to facilitate conducting the clutch testing required by this section. Clutch disengagement is also required by this section, thus, malfunction of the disengagement feature would be a basis for discontinuance. Some rotorcraft configurations (those with single-spool turbine engines or reciprocating engines) include an additional clutch to

decouple the engine from the drive system to facilitate engine starting. These clutches should also be exercised at least 400 times during this test.

(8) Section 29.923(k) sets forth the optional tests to be conducted if a 30-minute OEI rating is requested. It may be noted that the time for conducting this test replaces time deducted from the run of § 29.923(f). Flight control positions should be set for level flight or climb, whichever produces the maximum forward thrust component, and the antitorque system control should be set to react the maximum rotor torque. The torque and rotational speed values should be the maximum for which approval is requested.

(9) Section 29.923(m) normally is satisfied by the requirements of §§ 29.571 and 29.907.

(10) Section 29.923(n) requires special tests for rotor drive systems designed to operate at two or more gear ratios. Depending on the limitations and instructions proposed for operating at other gear ratios, additional tests (beyond the normal 200-hour schedule) or substitutions into the basic test should be conducted to qualify the rotor drive system for operations at other gear ratios. The length of testing, torque and speed requirements, overspeed tests, and control positions for these tests should parallel the requirements of the basic endurance test.

(11) Section 29.923(o) requires the rotor drive system and rotor control mechanism to be in a serviceable condition at the end of the test. Verification of this requirement requires a complete disassembly and examination of the entire rotor drive system and rotor control mechanism. The disassembly itself should be closely monitored for evidence of adequate breakaway torque on all bolted fasteners. Samples of lubrication from oil sumps and filters should be retained for spectrographic analysis, and seals should be examined for possible damage due to test requirements. Care should be taken to differentiate between seal damage and bearing damage due to disassembly procedures so that the direct results of the test may be properly considered. Close visual observation of each tooth on each gear is necessary to affirm proper load/contact patterns and absence of excessive surface stress or scrubbing motions. Bearings should be examined to verify that ball or roller paths are within limits, bearing cages are undamaged, and bearing balls or rollers and their races are free from pitting. Any evidence of bearing races turning or spinning in respective housing or bores probably indicates design or fit deficiencies. The applicant should have available wear limits data which include items such as distance across pins and tooth profile limits for gears. Many of these items require special, close tolerance inspection equipment and trained inspectors to determine compliance. In some instances bearings, clutches, oil pumps, etc., should be returned to the original manufacturer for a finding of serviceability. Localized overheating, usually exhibited by discolorations is an indication of an unsatisfactory condition. Should any of the items discussed above or other defects appear such that the component is unserviceable, a redesign which includes recognizable improvements should be required before authorizing a retest. To simply “try again” in hopes of success should not be accepted.

(12) This section also prohibits intervening disassembly which might affect test results. Generally, this simply means no disassembly whatsoever. However, some very limited disassembly can usually be conducted provided care is used to assure that items such as critical fastener torques or gear backlash controls are not disturbed.

c. Additional Test Considerations.

(1) Pressure Lubricated Gearboxes. The endurance test hardware can be adjusted/modified to sustain high-limit oil temperature and low-limit oil pressure in order to provide a basis for approval of the values listed as limits. A minimum of 20 hours at maximum continuous torque and maximum continuous rotational speed should be involved in the test. Other parameters such as minimum oil temperature and maximum oil pressure may more appropriately be evaluated by bench test. The significant points here are effects of extremely high oil pressure (due to the high viscosity of cold oil) on any positive displacement oil pump, on filters for possible collapse, on oil coolers for possible rupture due to internal pressure, seals, bypass valves, and most important, adequate lubrication of gears, bearings, etc., under conditions of minimal oil flow. Normally, an operation restriction against exceeding idle power/speed conditions until significant warm-up occurs is prescribed. Individual component qualification tests may provide data to meet some of these aspects.

(2) The existing endurance test schedule does not necessarily provide for any asymmetric power inputs from multiengine drive system arrangements. For this situation, the drive system should at least be subjectively evaluated for possible hazards or excessive loads to be expected from asymmetric torque inputs and additional testing prescribed under the authority of § 29.923(g). The extent and severity of these tests should be established in consideration of the design peculiarities, the recommended operating procedures, and any OEI tests included in this test schedule.

(3) Accessory Drives. Normally, all accessory drives on a gearbox will be loaded during the endurance test. Electrical load banks or other suitable methods may be used to assure that the generator drives are loaded and thus properly qualified. Hydraulic pumps may be loaded by resetting hydraulic system relief valves to maintain limit pressure (load) continuously. If this condition is excessively severe, a method of load cycling may be appropriate. Note that accessory loads reduce the power available to the main rotor. Also, tail rotor loads are, insofar as the transmission is concerned, another large accessory. Care should be taken to assure that in-flight unloading of these accessory drives, including the tail rotor does not subject the main gearbox to loads significantly beyond those qualified by endurance tests.

(4) Gearbox Oil Tanks. Normally, gearbox oil is contained in an integral cast sump which, for other reasons, has sufficient strength to obviate the need for pressure tests. However, a subjective evaluation should be made to assure that detail design features such as sight gauges, filler caps, etc., offer adequate strength.

AC 29.923A. § 29.923 (Amendment 29-26) ROTOR DRIVE SYSTEM AND CONTROL MECHANISM TESTS.

a. Explanation. Amendment 29-26 includes additional endurance test criteria for a new continuous OEI rating, and clarifies the torque and RPM relation intended for the various power ratings involved in the tests prescribed by this section.

(1) Section 29.923(a)(1) was amended to require that the test cycle be extended beyond 10 hours if OEI rating tests are included in the test program. This change was needed to maintain the cycle aspect of the test if OEI ratings are included.

(2) Section 29.923(a)(3) was amended to include rotational speed as a part of the test because the term “torque” by itself does not adequately define the test requirements.

(3) Section 29.923(b)(2), (f), and (k) were amended to add the test requirements for the new continuous OEI rating and retain, as an alternate, the 30-minute OEI rating tests for those applicants who may request this rating. This change provided a regulatory test basis for qualifying the rotor drive system for optional OEI ratings.

(4) Section 29.923(g) was amended to remove the inference that the 2½-minute OEI runs should be repeated if the takeoff run is reconducted. Under these circumstances, additional testing for the 2½-minute rating is unnecessary.

b. Procedures.

(1) The construction of this amendment is such that a series of runs, each at least (but not limited to) 10 hours in length, should be repeated 20 times for a total of at least 200 hours of test. The time required to adjust power or to stabilize operating conditions for those conditions that require stabilization is not included. Figure AC 29.923A-1 shows a graphic representation of the 10-hour test cycle. Extension of the total test time beyond 200 hours (or extension of test runs beyond 10 hours) will occur if qualification for the 2½-minute, 30-minute, or continuous OEI optional ratings is proposed by the applicant for rotorcraft equipped with two or more engines. Also, compliance with § 29.923(g) may result in extended endurance tests if dynamic or malfunction conditions exist which adversely affect the endurance tolerance of the rotor drive system. Section 29.923(a) should be interpreted as requiring test runs or cycles to be repeated in essentially the same sequence, although more than 10 hours may be needed to complete a run or cycle. This section also requires the test to be conducted “on the rotorcraft.” This means a rotorcraft that is in conformity to the type design for which approval is requested. However, many nonconforming features, such as doors, some cowling and instrumentation, fuel tanks (alternate external fuel supply may be utilized), interior features, fire detectors, extinguishers, inlet ducts, exhaust baffles, etc., may be acceptable provided each item is technically considered and found to have no impact on the test results. Any significant deviations from the

conformed rotorcraft type design should be coordinated with the cognizant FAA/AUTHORITY engineering staff and, if found acceptable, properly documented. The restraint (tie-down) arrangement used during the test should be arranged to react rotor thrust loads in lateral as well as vertical directions. The restraint should permit normal deflections due to rotor thrust in the engine and drive system support arrangement.

(2) The test torque and speed requirements of § 29.923(a)(3)(i) refer to the torque/speed combination (or power) values for which approval is requested. The requested torque/speed combination should not exceed the limits approved for the respective engine(s) to be used. An applicant may qualify the rotor drive system for torque values higher than those approved for the engine.

(3) In §§ 29.923(c), (d), (e), and (f), the torque requirements should be interpreted as above; i.e., the run should be made with maximum continuous torque or percentage thereof, as specified by the subparagraph; and the rotational speed should be maximum continuous for paragraph (d) and the lowest permissable “power-on” speed for paragraphs (e) and (f). Rotor control cycling should be accomplished during the “maximum continuous” portion of the endurance run. The controls of concern are the flight controls (cyclic and directional controls for typical rotorcraft). The collective control is normally used to set power and is not involved in control cycling. During control cycling, the controls may be cycled from stop to stop; or a limited travel may be accepted if the travel produces the maximum fore and aft, left and right, and yaw thrust components of the rotors as measured in flight. The frequency for cycling the controls is defined in §§ 29.923(c)(1), (2), and (3), and specified in Note 3 of figure AC 29.923A-1. One method of determining the required control displacement is to measure main rotor mast bending in level forward flight at maximum continuous power for the forward control displacement limit, and in level rearward flight at maximum continuous power (or the power associated with the maximum rearward flight speed to be expected) for the aft control displacement limit. Using the same mast bending instrumentation, with the rotorcraft in the ground tie-down situation, and with collective control set for maximum continuous power, displace the cyclic fore and aft to obtain the same mast bending as measured in flight. Similar measurements and control displacements may be used for sideward thrust components. Yaw control displacement should consider maneuver requirements in conjunction with sideward flight. Critical gross weight and center of gravity should be used to establish flight test conditions. These same procedures may be used to establish limited control positions required to comply with § 29.923(i), except that typical flight conditions to be used would be stabilized level flight at maximum continuous power, climb at maximum continuous power, hover, and stabilized sideward and rearward flight. Note that for § 29.923(i)(1), vertical thrust is required. Depending on the mast angle and center of gravity, this condition may not necessarily involve zero mast bending loads. Vertical thrust may be used during the takeoff run, including the runs at 2½-minute power and the overspeed run of § 29.923(h). One-engine-inoperative runs (§ 29.923(k)) should be conducted with the cyclic set for maximum forward thrust. For these runs and any run

that does not specify the position for the yaw control, that control should be set to react to main rotor torque.

(4) Section 29.923(k) sets forth the optional tests to be conducted if a 30-minute or a continuous OEI power rating is requested. Flight control positions should be set for level flight or climb (whichever produces the maximum forward thrust component) and the anti-torque system control should be set to react the maximum rotor torque. The torque and rotational speed values should be the maximum for which approval is requested.

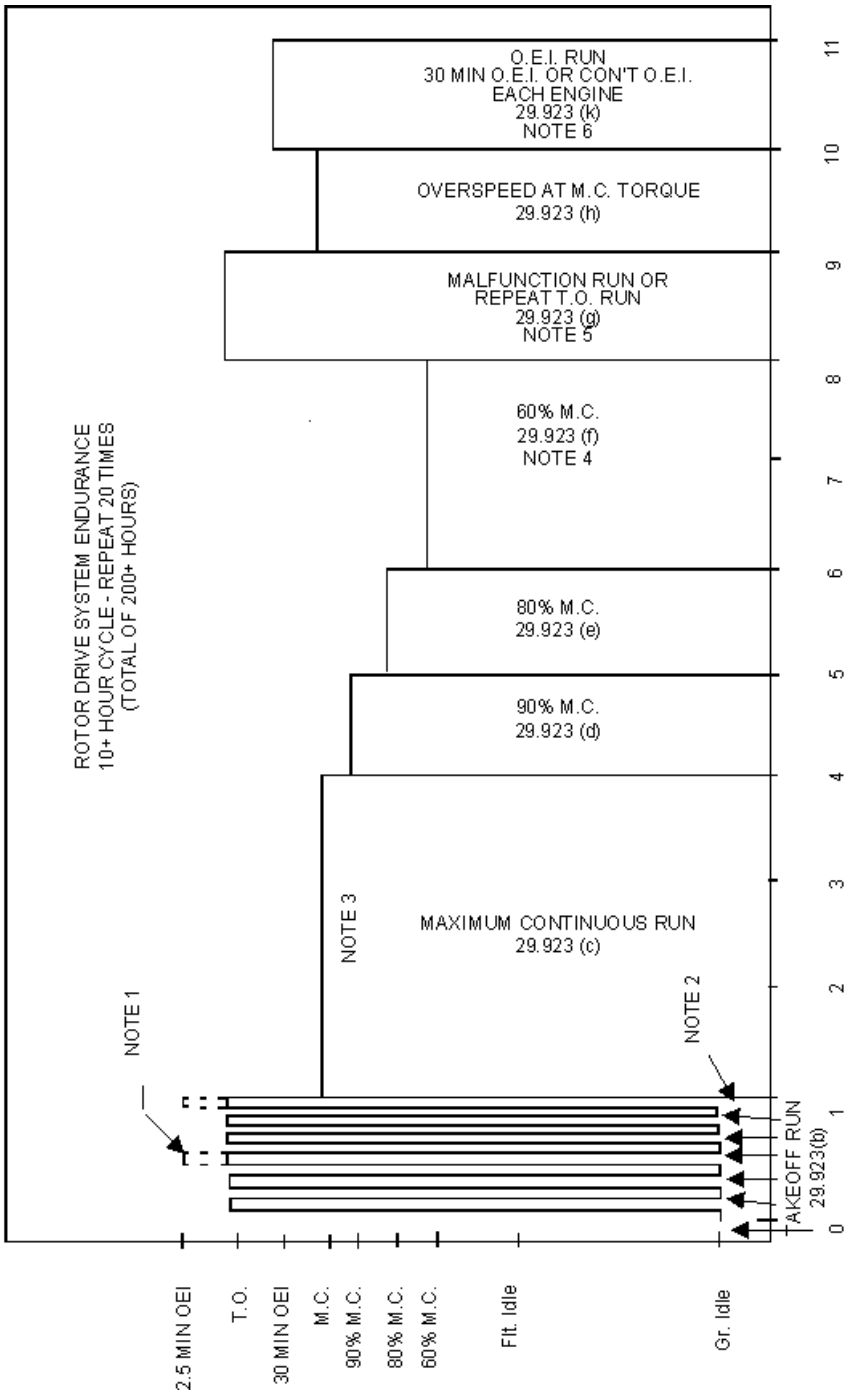

FIGURE AC 29.923A-1

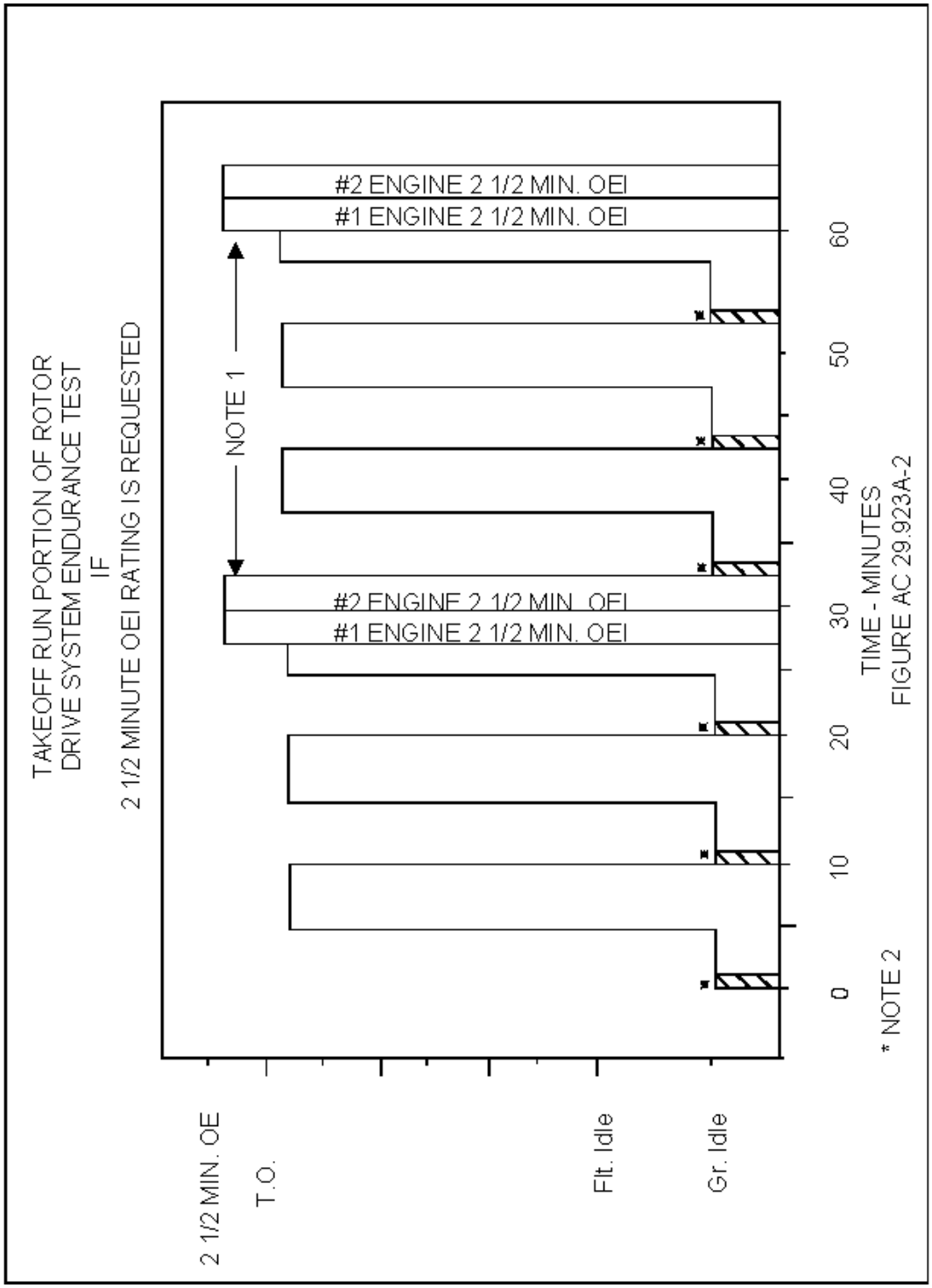

FIGURE AC 29.923A-2

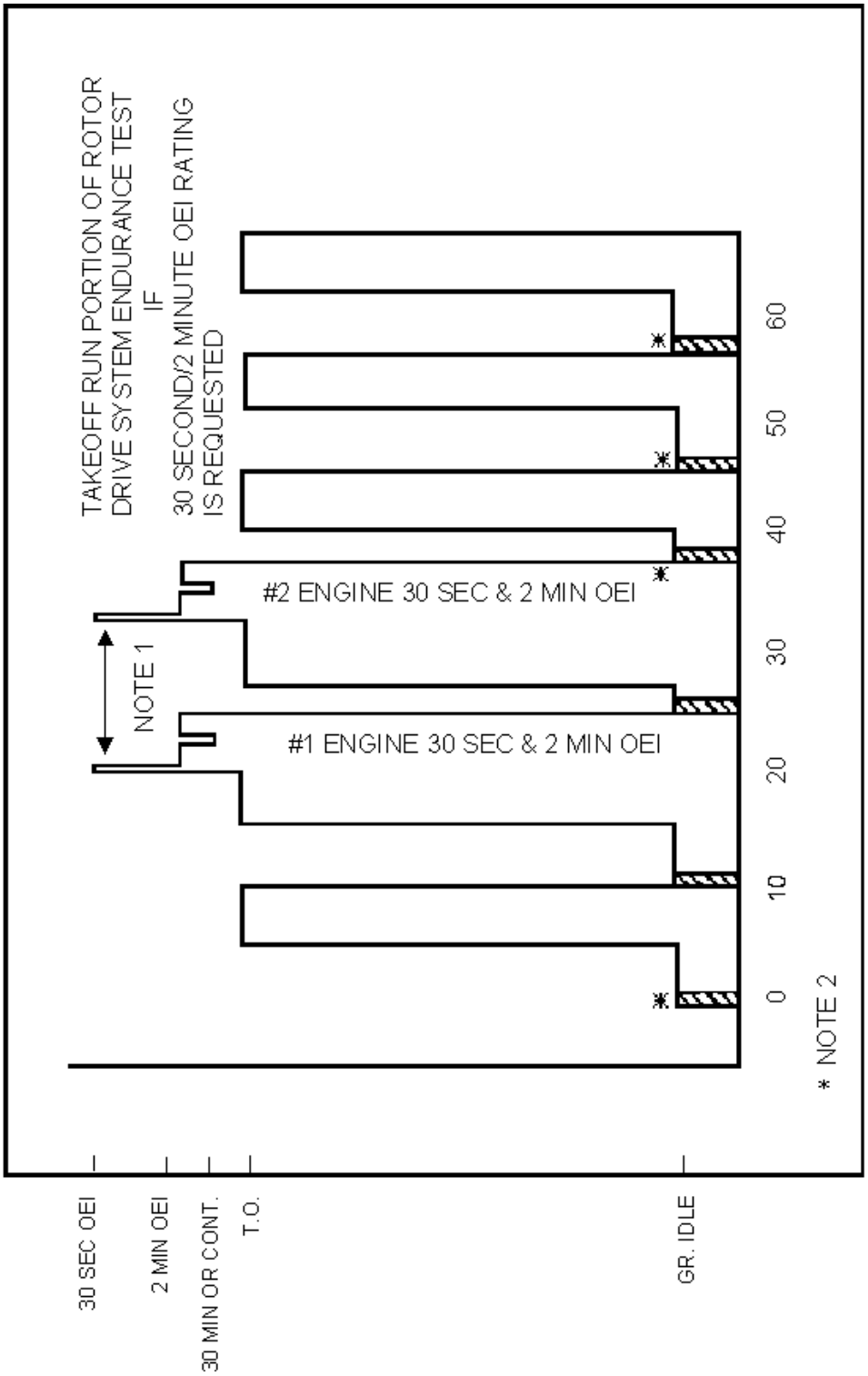

TIME - MINUTES

FIGURE AC 29.923A-3

Figures AC 29.923A-1, AC 29.923A-2, and AC 29.923A-3 Notes

1. If the 2½-minute OEI rating is requested, the following should be conducted for each engine: Demonstrate 2½-minute OEI power twice or 5 minutes per cycle for a total of 100 minutes at 2½-minute OEI power during the 200-hour endurance test. See figure AC 29.923A-2 for a graphic description of the takeoff run for a two-engine rotorcraft using the 2½-minute OEI rating (Refer to § 29.923(b)(2)). If the 30-second/2-minute OEI rating is requested, the following should be conducted for each engine: Demonstrate 30-second OEI power followed by 2-minute OEI power. After 2 minutes reduce and stabilize power to 30-minute or continuous OEI level. Once the power is stabilized reapply 2 minute OEI power. This should result in 4½ minutes per cycle for a total of 10 minutes at 30-second OEI power and 80 minutes at 2-minute OEI power during the 200-hour endurance test. See figure AC 29.923A-3 for a graphic description of the takeoff run for a two-engine rotorcraft (refer to § 29.923(b)(3)). If either the 2½-minute or 30-second/2-minute OEI ratings are demonstrated, the takeoff run portion of figure AC 29.923A-1 will be longer than 1 hour as shown in figure AC 29.923A-2 or figure AC 29.923A-3, respectively.

2. Apply the rotor brake during the first minute of the 5-minute idle period. Conduct 400 brake applications during the 200-hour endurance test (§ 29.923(j)).

3. During the maximum continuous run, cycle the rotor controls 15 times per hour: (Refer to §§ 29.923(c)(1) - (3)). The cyclic control should be cycled through maximum vertical thrust, maximum forward, maximum left, maximum right, and maximum rearward thrusts. The pedal controls should be cycled through maximum right, neutral, and maximum left positions. Each maximum cyclic and pedal control position should be held for at least 10 seconds. During the remainder of the test, set the yaw control to react to the main rotor torque, and set the flight controls to achieve:

Condition	Portion of Test
max vertical thrust	20 percent
max forward thrust	50 percent
max left thrust	10 percent
max right thrust	10 percent
max rearward thrust	10 percent

Figures AC 29.923A-1, AC 29.923A-2, and AC 29.923A-3 Notes (continued)

4. The 60 percent maximum continuous run is 2 hours (Refer to § 21 29.923(f)), unless either 30-minute OEI or continuous OEI power is requested. In that case, the 60 percent maximum continuous run is 1 hour.

5. A 1-hour malfunction run (if deemed necessary) or the takeoff run is repeated (without OEI portions). Refer to § 29.923(g).

6. The OEI run defined in § 29.923(k) is not required unless an OEI power rating is requested. If a 30-minute OEI power rating is requested, each engine in sequence should be run at the 30-minute OEI condition for 30 minutes. If a continuous OEI power rating is requested, each engine in sequence should be run at the continuous OEI condition for 1 hour. The total OEI run time may exceed the 1 hour shown in figure AC 29.923A-1.

AC 29.923B. § 29.923 (Amendment 29-31) ROTOR DRIVE SYSTEM AND CONTROL MECHANISM TESTS.

a. Explanation. Amendment 29-31 added § 29.923 (p) that defines qualification tests for lubricants used in the rotor drive system and control mechanisms. Section 29.923(p) contains a requirement for a portion of the system qualification tests to be accomplished with specific lubricating oil temperatures and pressures.

b. Procedures. The requirements of § 29.923(p) should be met for all rotor drive system and control mechanism qualification tests. Additionally, these requirements should be met if certification of alternate lubricants for the rotor drive system is requested. Thirty hours of qualification testing is required on the gearbox in which the alternate lubricant(s) is proposed to be used. During this testing, the lubricant temperature is to be measured with the temperature probes that will be used in service. The lubricant temperature should be maintained at the maximum operating temperature established for the gearbox in service. For pressure lubricated systems, the gearbox lubricant pressure should be maintained at the minimum operating pressure that has been established for the gearbox in service. The lubricant pressure is to be measured in the same manner and with the same probes that will be used in service. During the 30 hours of testing required by § 29.923(p), the lubricant temperature and pressure should be applied and measured simultaneously. For one-engine-inoperative ratings, the test time should be extended by one engine failure cycle to include operation at the one-engine-inoperative rating for which approval is requested. Equivalent testing or comparative analysis of the proposed lubricant and the approved lubricant specifications may be used to approve an alternate lubricant.

AC 29.923C. § 29.923 (Amendment 29-34 and 29-40) ROTOR DRIVE SYSTEM AND CONTROL MECHANISM TESTS.

a. Explanation. This paragraph, AC 29.923C, reflects changes made by Amendment 29-34 and 29-40. Amendment 29-34 added § 29.923(b)(3) that defines qualification tests for 30-second/2-minute OEI ratings. This new paragraph also allows for the 30-second/2-minute OEI portion of the endurance test to be accomplished on a representative bench test stand using the drive system components which can be adversely affected by these tests. Amendment 29–40 doubles the endurance test time for 2-minute OEI for each power section.

b. Procedures.

(1) For accomplishment of the endurance test for 30-second/2-minute OEI, § 29.923(b)(3) requires that immediately following one of the 5-minute power on takeoff runs of § 29.923(b)(1) each engine must simulate a power failure and each engine providing power after the failure must apply the maximum torque and maximum speed for use with 30-second OEI power. This power level should be maintained for at least 30-seconds. The 30-second OEI power should then be followed by an application of the maximum torque and maximum speed for 2-minute OEI power for at least 2 minutes. After the 2-minute OEI power application the power should be reduced to and stabilized at 30-minute or continuous OEI, (whichever rating the rotorcraft will be certified with). After the power has been stabilized, the maximum torque and maximum speed for use with 2-minute OEI power should be reapplied for at least 2 minutes. Figure AC 29.923A-1 shows a graphic representation of the ten-hour test cycle with the 30-second/2-minute OEI segment included for each engine presented in figure AC 29.923A-3. This figure shows the OEI test segment being accomplished immediately following a 5 minute takeoff run. The OEI test segment can be accomplished after any of the 5-minute takeoff run segments. Section 29.923(b)(3) also requires that one of the 30-second/2-minute OEI segments for each engine be accomplished from the flight idle condition.

(2) Additionally, due to the damage inflicted on the engines and the ensuing cost caused by operating the engine at these powers, the 30-second/2-minute portion of the endurance test can be accomplished on a bench test rig found to be representative of the rotorcraft. The representative bench test rig should have the ability to generate the torques, speeds, torsional vibration frequency, and engine acceleration rate generated by the actual installation. The power should have the same method/path of application as that used on the rotorcraft. The test rig should be configured with the same components used for conducting the endurance test on the rotorcraft except that the test components not affected by asymmetric power application may not have to be installed (i.e., if a separate combining gearbox is used it may not be necessary to have the main transmission installed on the bench test rig).

(3) When conducting the bench test for 30-second/2-minute OEI, it is not necessary to reaccomplish the takeoff portion of the endurance test. The simulated

power failure and application of 30-second/2-minute OEI power by the remaining power section should be accomplished after the input power has stabilized at takeoff power. The takeoff portion of the endurance test should be accomplished on the rotorcraft.

AC 29.927. § 29.927 (Amendment 29-17) ADDITIONAL TESTS.

a. Section 29.927(a):

(1) Explanation. This paragraph is authority to require any special tests or investigations to establish that the rotor drive system is safe.

(2) Procedures. The certification engineer should review the design of the rotor drive system and its installation and intended operation for features or conditions that may not be adequately qualified in the tests prescribed by this Part. Additional qualification test programs should be developed and accomplished to ensure safe operation of the system. Items of interest would include poorly defined load paths associated with redundant design features, flight deflections of structure, mounting arrangements which may not be properly qualified by ground tests, and special or unusual operating procedures which are anticipated by the applicant.

b. Section 29.927(b):

(1) Explanation. This paragraph prescribes testing to qualify the rotor drive system for the power excursions to be expected with governor-controlled engines wherein the engine power changes automatically to maintain rotorspeed at preselected values. At high collective flight control displacements, the normal rotor speed droop will result in governor-controlled engines automatically accelerating to maximum fuel flow or to any other power, speed, temperature, or torque limiting device, regardless of crew action or artificially established limitations reflected by instrument markings. This high power condition can occur typically during a normal landing when the crew applies high collective to cushion ground contact or, for multiengine rotorcraft, during any flight regime when an engine fails and the corresponding loss of power results in drooping the rotor speed. Special tests are prescribed by this section to provide assurance that the rotor drive system can safely sustain these conditions. The tests of this section should be conducted without intervening disassembly, and all rotor drive system components should be in serviceable condition after the test. It is permissible but not required that these tests be performed on the same specimen of the rotor drive system used to show compliance with § 29.923.

(2) Procedures. These tests should be conducted on a ground-test rotorcraft conformed to the type design configuration similar to that required for endurance testing under § 29.923. Cyclic and collective control may be set to simulate vertical lift and antitorque control set and/or adjusted to react to main rotor torque. Rotation speed should be maximum normal for the test condition; i.e., for the all-engines test under § 29.927(b)(1), use the maximum RPM for takeoff power. For the one-engine-inoperative (OEI) test of § 29.927(b)(2), RPM droop, if any, that would

occur in service, may be allowed. Since the OEI test of § 29.927(b)(2) usually requires the remaining engine(s) to produce power not usually available under normal atmospheric conditions, some supplemental method, such as refrigerating and/or ramming inlet air, or overfueling the engine, may be required. Alternatively, bench testing (transmission test rig) of the rotor drive system (using only the components subject to the higher OEI power, if desired) may be appropriate providing close simulation of the rotor drive system installation environment is achieved. Overtesting, to compensate for inadequacies in the bench test setup may be negotiated with the FAA/AUTHORITY approval office. Note that compliance with § 29.903(b) requires that the remaining engine(s) be capable of continued safe operation under the same conditions as dictated by this test. The engine manufacturer may have already conducted tests adequate to substantiate this requirement. If not, his assistance in testing and the subsequent serviceability finding is imperative.

c. Section 29.927(c):

(1) Explanation. This paragraph prescribes a test which is intended to demonstrate that in the event of a major failure of the lubrication system used on the rotor drive system, no hazardous failure or malfunction will occur in the rotor drive system that will impair the capability of the crew to execute an emergency descent and landing. The lubrication system failure modes of interest usually are limited to failure of external lines, fittings, valves, coolers, etc., of pressure lubricated transmissions and/or gearboxes.

(2) Procedures. Conventionally, a bench test (transmission test rig) is used to demonstrate compliance with this rule. Since this is essentially a test of the capability of the residual oil in the transmission to provide limited lubrication, a critical entry condition for the test would be the critical eligible lubricant preheated to the transmission oil temperature limit. With the transmission operating at maximum normal speed, with lubricant as described above, with nominal cruise torque applied (reacted as appropriate at main mast and tail rotor output quills), and with a vertical load at the mast equal to gross weight of the rotorcraft at 1g, disconnect or cause a leak in an external oil plumbing device. Upon illumination of the low oil pressure warning (required by § 29.1305), reduce input torque to simulate autorotation and continue rotation for 15 minutes. Apply input torque to simulate a minimum power landing for approximately 15 seconds to complete the test. Successful demonstration may involve limited damage to the transmission provided it is determined that the autorotative capabilities of the rotorcraft were not significantly impaired.

d. Section 29.927(d):

(1) Explanation. This test is intended to demonstrate that overspeed conditions which may result from control failure or control misapplication will not incur damage to the rotor drive system. Specific conditions for conducting the test are provided in § 29.927(d)(1), (d)(2), and (d)(3).

(2) Procedures. The test may be conducted on a rotorcraft configured for the endurance tests prescribed by § 29.923. Turbine engines involved in the test may require fuel control rerigging or operation on the manual fuel control system, if available, to achieve test requirements.

NOTE: Some equivalent safety findings have been issued based on limiting the test speed to that permitted by an independent, reliable overspeed trip device, thus avoiding permanent damage to yokes, engines, etc., involved but not subject to evaluation under this rule.

(3) With collective control set for minimum rotor pitch for smooth operation, the cyclic control positioned for vertical lift, and the antitorque control set in flat pitch, add power to achieve 120 percent of maximum continuous speed and hold this condition for 30 seconds. Deceleration and operation between overspeed runs should be as described in the rule. Acceleration and deceleration must be at maximum rates available to the configuration.

e. Section 29.927(e):

(1) Explanation. This paragraph sets forth conditions to be normally employed during the overtorque and overspeed tests of this section and authorizes certain exceptions with criteria for justification.

(2) Procedures. None.

AC 29.927A. § 29.927 (Amendment 29-26) ADDITIONAL TESTS.

a. Explanation. Amendment 29-26 revises and extends the rotor drive system lubrication failure test requirements for Category A rotorcraft in § 29.927(c). Category A rotorcraft should have significant continued flight capability after a failure in order to optimize eventual landing opportunities. Indefinite flight following the lubrication system failure is not expected. The change to the overspeed test requirements in § 29.927(d) removes the arbitrary requirement of 120 percent and substitutes a more realistic limit related to the operating characteristics of the rotorcraft. This change is needed because the existing 120 percent overspeed requirement may be unnecessarily severe for some rotorcraft. An additional change eliminates the requirement for accomplishing the acceleration phase of the overspeed tests within 10 seconds when the maximum acceleration rate of the engine requires more time. This will avoid special engine fuel control modifications for test purposes which are unnecessary and may damage the engine. Section 29.927(f) was added which requires each individual test specified by this section to be conducted without intervening disassembly and, except for the lubrication failure tests of § 29.927(c), requires each part tested to be in a serviceable (return to service) condition at the conclusion of the test. Intervening disassembly is unacceptable since it can invalidate the required serviceability findings. The serviceability requirement is needed to ensure that only test results which are satisfactory may be used to show compliance.

b. Procedures.

(1) Section 29.927(c) prescribes a test which is intended to demonstrate that no hazardous failure or malfunction will occur in the event of a major rotor drive system lubrication failure. The lubrication failure should not impair the ability of the crew to continue safe operation of Category A rotorcraft for at least 30 minutes after perception of the failure by the flight crew. For Category B rotorcraft, safe operation under autorotative conditions should continue for at least 15 minutes. Near the completion of the lubrication failure test, an input torque should be applied for 15 seconds to simulate a minimum power landing following autorotation. Some damage to rotor drive system components is acceptable after completion of the lubrication system testing. The lubrication system failure modes of interest are usually limited to failure of bearings, gears, splines, clutches, etc., of pressure lubricated transmissions and/or gearboxes. A bench test (transmission test rig) is commonly used to demonstrate compliance with this rule. Since this is a test of the capability of the residual oil in the transmission to provide limited lubrication, a critical entry condition for the test should be established. The transmission lubricating oil should be drained while the transmission is operating at maximum normal speed and nominal cruise torque (reacted as appropriate at the main mast and tail rotor output quills). A vertical load should be applied at the mast, equal to the gross weight of the rotorcraft at 1g, and the lubricant should be at the maximum temperature limit. Upon illumination of the low oil pressure warning required by § 29.1305, reduce the input torque for Category A rotorcraft to the minimum torque necessary to sustain flight at the maximum gross weight and the most efficient flight conditions. To complete the test, apply an input torque to the transmission for approximately 25 seconds to simulate an autorotation. The last 10 seconds should be at the torque required for a minimum power landing. A successful demonstration may involve limited damage to the transmission, provided it is determined that the autorotative capabilities of the rotorcraft were not significantly impaired. For Category B rotorcraft, upon illumination of the low oil pressure warning light, reduce the input torque to simulate an autorotation and continue transmission operation for 15 minutes. To complete the test, apply an input torque to the transmission for approximately 10 seconds to simulate a minimum power landing. A successful demonstration may involve limited damage to the transmission provided it is determined that the autorotative capabilities of the rotorcraft were not significantly impaired. If compliance with Category A requirements is demonstrated, Category B requirements will have been met.

(2) Section 29.927(d) provides the requirement to demonstrate that overspeed conditions, which may result from control failure or control misapplication, will not result in damage to the rotor drive system. The overspeed endurance cycle and overspeed conditions to be demonstrated are defined in this section. The test may be conducted on a rotorcraft configured for the endurance tests prescribed by § 29.923. Turbine engines involved in the test may require fuel control re-rigging or operation on a manual fuel control system to achieve test requirements. Fifty overspeed runs of 30 ±3 seconds should be run on the rotor drive system. The overspeed runs should be

alternated with stabilizing runs of from 1 to 5 minutes duration each at 60 to 80 percent of maximum continuous speed.

(i) The maximum speed to be demonstrated during the power on overspeed test is:

(A) The higher of:

(1) The speed to be expected from an engine control device failure; or,

(2) 105 percent of the maximum rotational speed to be expected in service, including transients.

(B) The maximum speed allowed by a speed limiting device if the device is installed independent of the engine controls and is shown to be reliable.

(ii) From the stabilizing run condition, increase power to achieve the maximum speed established from (i) above. Set the collective for minimum blade pitch for smooth operation. The cyclic control should be positioned for vertical lift, and the anti-torque control should be set in flat pitch. Hold this condition for 30 seconds, then decelerate to the stabilizing run condition.

(iii) The acceleration and deceleration described above should be accomplished in 10 seconds or less except where it can be shown that the certified engine acceleration or deceleration rate exceeds 10 seconds. The time required for acceleration and deceleration may not be deducted from the 30 second overspeed period.

NOTE: Some equivalent safety findings have been issued based upon limiting the test speed to that permitted by an independent, reliable overspeed trip device. This has been done to avoid permanent damage to rotors, yokes, engines, etc., which are involved, but not under evaluation by this test.

(3) Paragraph (f) requires that the overtorque, lubrication system failure, and overspeed tests required by §§ 29.927(b), (c), and (d) respectively be conducted without intervening disassembly during the individual test. After each test, a teardown inspection is performed, and except for the components used in the lubrication system failure test, the components are required to be in serviceable (return to service) condition.

AC 29.931. § 29.931 (Amendment 29-12) SHAFTING CRITICAL SPEEDS.

a. Explanation.

(1) At certain speeds, rotating shafts tend to vibrate violently in a transverse direction. These speeds are variously known as “critical speeds,” “whirling speeds,” or

"whipping speeds." The vibration results from the unbalance of the rotating system and can be shown to reach destructive values with only minimal unbalance. The nature of this phenomena is that as shaft rotational speed increases, residual unbalance in the shaft gives rise to centrifugal forces. These forces cause the shaft to rotate in a bent or bowed configuration with the centrifugal force induced bending loads being balanced by coriolis and elastic forces in the shaft. As shaft rotational speed increases, the centrifugal forces increase to the point at which they exceed the elastic forces in the shaft, and divergence occurs. This point in the speed range is called the critical speed. At shaft speeds above the critical speed, a 180° phase change occurs; the shaft's mass center moves toward the center of rotation and the amplitude of vibration diminishes with further increases in shaft speed.

(2) The most prominent design option is to operate the shafting subcritical; i.e., below the first critical speed, with adequate margins from critical speed at the maximum allowable speed, including transients. However, another option, that of supercritical shaft operation; i.e., operating above the first or even higher critical speeds with adequate margins between any critical speed for the normal operating speed range. This latter portion requires some form of fixed system damping to permit safe transition through the critical speed range and to avoid excessive nonsyncronous vibrations or instability in the critical speed mode at suboperating frequency.

(3) A review of typical design practices and drive system arrangements discloses several types of shaft support and loading:

(i) Main rotor/mast/transmission assemblies rigidly mounted to the airframe;

(ii) Main rotor/mast/transmission assemblies compliantly mounted to the airframe;

(iii) Main rotor supported through a bearing arrangement by a rigid nonrotating structure with a coaxial torque shaft driving the rotor;

(iv) Cross-shafting, interconnect shafting, tail rotor drive shafting which are generally supported by gearboxes at each end and by hanger bearings at semispan;

(v) Engine to transmission shafting which, for compliant pylons, incorporate flexible or geared coupling, to accommodate the misalignment and chucking; and

(vi) Tail rotor/mast/gearbox supported on the tailboom or near the upper extremity of a vertical fin.

(4) With regard to compliant pylon mountings, recent developments in vibration control have led to rotor isolation wherein the fuselage is isolated from the rotor and

transmission, resulting in improved vibration and system reliability. Rotor isolation systems typically entail the installation of isolation devices at the transmission-airframe interface. The crux of rotor isolation is providing adequate, low-frequency isolation without excessive relative displacement or loss of mechanical stability. Rotor isolation affects shaft critical speeds in the following ways:

(i) First, the transmission mounting configuration, system stiffness, and tuning requirements may result in different fore-and-aft and lateral natural frequencies, imposing additional analytical requirements. For compliant mounting, the response while transitioning through the fundamental or rocking modes is generally controlled by dampers or elastomeric elements.

(ii) Second, the relatively high displacements permitted by the isolation system, depending on configuration, may result in variations in shaft misalignment and length thus adding further complexity to the analytical prediction of critical speeds.

b. Procedures.

(1) Subcritical Shafting Designs. Three basic methods of qualification may be considered, with the required margins relative to the degree of assurance provided:

(i) Analytical.

(A) Simplistic model(s) as shown in figures AC 29.931-1 and AC 29.931-2; 35 percent margin shown above maximum operating speed.

(B) Detailed model, taking into account significant variations in shaft stiffness, mass distribution, cone adapters, support bearing stiffness, support structure; 20 percent margin shown above maximum operating speed.

(ii) Analytical supported by tests. Analysis supported by shake test (rotating or nonrotating) or by bench test, where appropriate adjustments are made for differences between the bench and the aircraft; 15 percent margin shown above maximum operating speed.

(iii) Whirl test on the aircraft.

(A) For all cases, it should be shown that, under maximum permissible unbalance and at the maximum operating speed, the shafting and support structure has acceptable clearance and does not have excessive vibration.

(B) For compliant pylon mountings, damping of the rigid body rocking modes, which are often transitioned during run-up to normal speed (and which are not critical flexing modes), may be verified by analysis, laboratory tests, or ground run-up with the rotor at maximum permissible unbalance. Damping on the order of 5 percent equivalent viscous damping is generally acceptable.

(C) For tail rotor masts, the analysis should include fixed system structural response including tailboom, fixed control surfaces, and vertical fin. The frequency analysis will then contain both fixed system and rotating system modes. An energy analysis can then be used to identify whether the modes are predominantly fixed system or rotating system modes. Systems with up to 35 percent energy in the rotating system have been operated in the field without significant problems. For this type of shafting installations, it is advisable to avoid fixed system modes at multiples of shaft speed, particularly where highly nonisotropic mountings exist.

(2) Supercritical Shafting Design. Another facet occasionally encountered with shafting is the concept of normally operating at speeds above the critical speed, commonly referred to as “supercritical operation.” To function properly, suitable dampers must be installed to enable the shaft to pass safely through the lower critical speed up to the operating speed, and speed controls should be devised so as to avoid any tendency to operate continuously at any critical speed. Accurate balancing of the rotating components will also decrease the energy to be dissipated into the damping device during transition thereby increasing its serviceability and reliability. It should be noted that damper design and locations become more complex as selected operating speed increases through the third or fourth critical frequency. Multiple node points will exist where dampers will not be effective. Production specimen testing at high speed/high torque conditions should include checks for shaft straightness until experience verifies that shaft deflecting is not significant. For system utilizing squeeze film dampers at the support bearings, variations in oil pressure, flow restrictions, and the effects of bearing preload should be evaluated. The effects of shaft and unbalance and the proximity of the damper to bottoming under maximum unbalance should be evaluated.

(3) If the shafting configuration of the rotorcraft includes universal joints or misalignment couplings, a velocity differential will exist across the joint which creates sinusoidal torques and bending moments at both shafts at multiples of the rotation speed. To avoid amplification of these torques and bending moments, the design should preclude coincidence of critical speeds and multiples of normal speeds.

(4) Note that failure considerations required under § 29.901(d) may result in abnormal rotational speed and torque excursions. Resulting encounters with critical speeds should not create hazards.

(5) Order 8110.9, Handbook on Vibration Substantiation and Fatigue Evaluation of Helicopters and Other Power Transmission Systems, also addresses this subject. This document is distributed to section level and above in all Regional Aircraft Certification Offices.

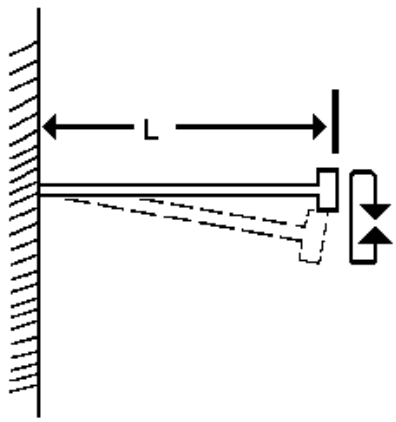

$$W_{cr} = \sqrt{\frac{k}{M + 0.23m}}$$

W_{cr} = first critical speed, RAD/SEC
k = shaft spring rate, LB/IN = $3EI/L^3$
E = modulus of elasticity
I = moment on inertia
M = mass of weight, LB-SEC^2/IN
m = mass of shaft, LB-SEC^2/IN

FIGURE AC 29.931-1. CANTILEVERED SHAFT, FIRST CRITICAL SPEED

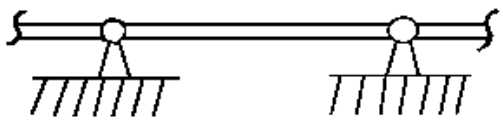

$$W_{cr} = a\sqrt{\frac{E\ I}{u\ L^4}}$$

W_{cr} = first critical speed-RAD/SEC
E = Young's modulus
I = inertia of shaft
u = mass per unit length
L = length between supports
a = a numerical constant: for first critical speed, a = $(pi)^2$ = 9.87

The numerical constant (a) for higher critical whirl modes or other shaft support systems may be derived from standard texts on this subject.

FIGURE AC 29.931-2. SHAFT BETWEEN SUPPORT BEARINGS, FIRST CRITICAL SPEED

AC 29.935. § 29.935 SHAFTING JOINTS.

a. Explanation. This rule requires the design of shafting joints to include provisions for lubrication when such lubrication is necessary for operation.

b. Procedures. Review the design of the rotor drive system for universal joints, slip joints (splines), and other shaft couplings. Lubrication access points (Zerk fittings) should be required unless the design incorporates alternate provisions for lubrication acceptable to the FAA/AUTHORITY.

AC 29.939. § 29.939 (Amendment 29-12) TURBINE ENGINE OPERATING CHARACTERISTICS.

a. Explanation. This section requires evaluation of engine operation, engine inlet airflow distortion, and engine/drive system torsional stability. A satisfactory rotorcraft design for all three items should be established by the manufacturer early in his development program since changes in design to satisfy these requirements are typically very expensive and will adversely impact other basic design features. The role of the certification engineer is to assure that the manufacturer's evaluation programs have been thorough and conclusive. The certification engineer should also determine, where applicable, that the FAA/AUTHORITY-approved Engine Installation Manual requirements are met.

b. Procedures.

(1) Turbine engine operation.

(i) Explanation. Smooth, stable operation of turbine engines is essential to safety and control of rotorcraft. This can be adversely affected by rotorcraft maneuvers, turbulence, high altitude, temperature, airspeed, and installation features such as the engine air inlet duct, exhaust duct, and the location with respect to other airframe items which induce or influence air flow through the engine. Powerplant control displacement rate can also be a factor, although most modern engines incorporate internal protection for this aspect. The engine's tolerance to these factors is reflected as the "stall margin" which is established by the engine manufacturer through design and test. However, this stall margin is applicable only to an engine with a specified inlet and exhaust and at specified altitude, temperature, and effective airspeed. Typically, the specified engine inlet duct is a symmetrical bellmouth and the exhaust is a short straight duct of specified diameter and length. The stall margin, even under the above test conditions, usually varies with engine power, acceleration or deceleration, compressor air bleed, and accessory power extraction.

(ii) Procedures. The official flight test plan should include requirements to investigate the engine operating characteristics for stall, surge, flameout, acceleration and deceleration response, and transient response (within approved limits) throughout the operating range of the rotorcraft. This should include maximum airspeed-sideslip

combinations, power recoveries, hover with wind from all azimuths and other maneuvers appropriate to the type. Recirculation of exhaust gases during hover can be critical for engine operation. Particular attention should be given to flight/operating conditions which can be judged critical from review of data on engine inlet pressure and temperature distribution patterns and engine stall margin data if available. High altitude has typically been critical for these tests and rearward flight at high altitude has resulted in unacceptable thermal distortions in the inlet due to reingestion. Stall, surge, or flameout which may be hazardous; i.e., causes loss of engine function, loss of control, severe torsional shock through the rotor drive system or otherwise damages the rotorcraft, is unacceptable.

(2) Vibration.

(i) Explanation. Engine airflow patterns are deflected or distorted by the presence of airframe inlet hardware, cowling, fuselage panels, and, to a degree, in almost all flight regimes. Additional items such as airframe installed particle separators, deflectors for snow, ice, or sand protection, and obstructions forward of the engine inlet, such as a hoist kit, could affect the engine air flow patterns. The rotating elements of the engine, particularly the compressor blades, will be subjected to a cyclically varying air flow as these elements move into and out of areas of deflected airflow to the engine. A corresponding aerodynamic load will be imposed on these engine elements. Since this loading is also cyclic, the possibility of critical frequency coupling with an engine component shall be investigated.

(ii) Procedure. Typically, this evaluation would involve installation in the engine inlet of a special multiple probe, total pressure sensing system, and flight testing which largely follows that prescribed for evaluation of engine operating characteristics as described above. Data from these tests can be reduced to create a pressure map at the compressor inlet face which, in conjunction with compressor speeds, may be used to determine the frequencies and relative amplitudes of the cyclic air loading imposed on the engine compressor blades. The engine manufacturer either supplies the sensing probe or specifies its design and performance. Also, the engine manufacturer may evaluate the test results or publish acceptance criteria. A wave analysis may be involved in identifying higher order excitations. Engine exhaust ducts which include bends, noise suppressors, or other obstructions may require an evaluation similar to that discussed above for the engine inlet. The engine manufacturer should be consulted for instructions or approval of this aspect. High performance engines may also require an engine inlet temperature survey. Details of instrumentation and acceptance criteria should be provided by the engine manufacturer. Engines equipped with only centrifugal compressors are less likely to encounter frequency coupling and may not require this investigation. The engine manufacturer’s recommendations should be followed in these cases.

(3) Torsional Stability.

(i) Explanation. Governor-controlled engines installed in rotorcraft are subject to a fuel control resonant feedback condition which could be divergent if not properly designed or compensated. This condition occurs when the response frequency of the governor on the engine is coincident with or close to a low order natural torsional frequency of the rotorcraft's rotor drive system. Typically, these frequencies appear in the 3 to 5 cycles per second (CPS) range. The manufacturer usually resolves torsional instability problems by introducing damping into the engine governor/fuel control. Provisions for this change must be supplied by or approved by the engine manufacturer. The final configuration may be a compromise between a lightly damped control, which will allow a positive but slow convergence of drive system torsional oscillations, and a highly damped control which exhibits excessive rotor speed droop or overspeed following rotorcraft collective control displacement.

(ii) Procedures. A ground and flight test program should be devised to evaluate the torsional response of the engine and drive system combination presented by the applicant. Instrumentation to record drive system torsionals should be applied to all major branches of the drive system. Engine parameters such as torque, RPM fuel manifold/nozzle pressure, compressor discharge pressure, and governor lever position should be recorded simultaneously with drive system parameters. The test program should include ground tie-down operation and flight operation across a range of engine power and rotor speeds while injecting control inputs as close to the first order drive system natural frequency as possible. Mechanical methods of making these inputs are not usually necessary if the desired frequency is in the 3 to 5 CPS range and the instrumentation readout confirms that the drive system was actually excited torsionally at its natural frequency. Control inputs should include collective, antitorque, and throttle. Also, cyclic inputs may be important on tandem rotor rotorcraft. The acceptance criteria may be dependent on several items. Among these are rotor and drive system fatigue loading, engine power response characteristics, limitations established by the engine manufacturer, etc. The acceptance criteria are usually stated as a percent damping (minimum). Typically, 1 percent of critical equivalent viscous damping (or greater) is acceptable. In effect, this means that the free vibration response to a control input damps to ½ amplitude in 11 cycles or less.

SUBPART E - POWERPLANT

FUEL SYSTEM

AC 29.951. § 29.951 (Amendment 29-12) FUEL SYSTEM - GENERAL.

a. Explanation.

(1) The term “fuel system” means a system which includes all components required to deliver fuel from the tank(s) to the engine(s). This includes, but is not limited to, all components provided to contain, convey, drain, filter, shutoff, pump, jettison, meter, and distribute fuel to the engines.

(2) Paragraph (a) of this section is a general statement of the performance requirements for fuel systems and constitutes authority to require fuel systems to be adequate notwithstanding compliance with detail requirements listed in §§ 29.953 through 29.999 of this subpart.

(3) Paragraph (b) of this section requires fuel systems to be designed so that air will not enter the system under any operating conditions by either arranging the system so that no fuel pump can draw fuel from more than one tank or by other acceptable means.

(4) Paragraph (c) of this section sets forth a fuel system performance requirement intended to ensure that ice to be expected in fuel when operating in cold weather will not prevent the fuel system from supplying adequate fuel to the engines. Although fuel system filters and strainers are the items in the fuel system most susceptible to clogging from ice particles in the fuel, this paragraph requires that the entire fuel system be shown to be capable of delivering fuel, initially contaminated with ice, to the engine(s).

b. Procedures.

(1) For paragraph (a), the applicant should show compliance with the fuel system requirements of this subpart, except that if unusual fuel system arrangements or requirements exist which are not adequately addressed by these subparts, this paragraph may be used as authority to require special tests, analysis, or system performance needed for proper engine functioning.

(2) For paragraph (b), review the fuel system design with special attention to fuel tank selector valves, crossfeed systems, and multiple tank outlet arrangements to ensure that no allowable fuel system configuration will permit air to enter the system. For questionable situations, the applicant should conduct ground or flight tests, as necessary, to verify compliance with this section.

(3) Paragraph (c) provides for sustained satisfactory operation of the fuel system with cold fuel initially contaminated with water. Since ice in the fuel system is not considered to be an emergency condition but, rather, is an expected service encounter, compliance would not involve the imposition of special rotorcraft limitations. Flight manual instructions such as land as soon as practicable, reduce altitude to some value less than otherwise permitted, reduce power, turn on boost pumps, etc., are not appropriate in demonstrating compliance. Some methods of fuel system ice protection which have been used to show compliance follow.

(i) Fuel heater. Usually these devices are fuel-to-engine oil heat exchangers and are normally located to protect the fuel filter from blockage by ice in the fuel. The adequacy of these devices should be established. Usually this involves generation of a heat balance between heat gained by fuel and heat lost by oil using performance data provided by the manufacturers of the fuel-oil heater, the oil cooler, the heat rejected by the engine to the oil, etc. A minimum oil temperature associated with the adequacy of the fuel heater may need to be established, marked on the oil temperature gauge, and verified to be maintained during critical flight conditions. Other unprotected parts of the fuel system remain to be evaluated and substantiated for compliance with this requirement.

(ii) Oversized fuel filter. This method may only substantiate the fuel filter and, as with the fuel heater method, is incomplete without evaluation of the remainder of the fuel system. An icing test of the filter should be accomplished. Fuel preparation procedures and method of testing should follow the applicable portion of SAE Aerospace Recommended Practice (ARP) No. 1401. A satisfactory configuration is achieved when a filter is demonstrated to have the capacity to continue to provide the filtration function, without bypassing, when subjected to fuel contaminated by ice to the degree required by this rule. Usually, a delta pressure caution signal for the filter is needed to alert the flightcrew that progressive filter blockage is in progress. The caution device setting should be established by test which demonstrates that after illumination of the caution signal sufficient filter capacity exists to enable completion of the flight. Fuel pressure should not fall below established limits because of ice accumulation on the filter.

(iii) Anti-ice additives. This method utilizes the properties of ethylene glycol to reduce the freezing temperature of water in the fuel. It has the advantage over other methods of protecting all components in the fuel system from ice blockage. Compliance with the rule by this method involves the following.

(A) Eligible additives. PFA-55MB (Phillips Petroleum Co.) and additives per specification MIL-I-27868, Revision D, or earlier. Later versions of this specification do not require glycerin, which may be needed to protect fuel tank coatings.

(B) Compatibility. Both engine fuel system and aircraft fuel system should be verified to be chemically compatible with the additive at the maximum concentration to be expected in the fuel system. Usually, information on eligible system

materials can be obtained from the engine manufacturer for the engine fuel system and from the additive manufacturer for aircraft fuel system materials.

(C) Adding or blending the additive to the fuel. These additives do not mix well with the fuel and indiscriminate dumping of additive into the tank will not only fail to protect the system from ice accumulation but likely will damage nonmetallic components in the system. Some fuels may have additive premixed in the fuel. If other fuels are to be eligible, a method for blending additive into the fuel during refueling must be devised and demonstrated to be effective.

(D) Placards should be added near the fuel filler opening to note that fuel must contain the approved anti-ice additive within the minimum and maximum allowed concentration.

(E) The FAA/AUTHORITY-approved flight manual should contain necessary information to attain satisfactory blending of the additive and procedures to allow the operator to check the blend in the fuel tank.

(iv) Fuel system protection (other than filters). If the fuel heater method or oversize filter method (paragraphs b(3)(i) and b(3)(ii)) is proposed, the remainder of the fuel system should be shown to be free from obstruction by fuel ice. This may be shown by testing the system with ice contaminated fuel (prepared as suggested for filter tests) or, in many cases, by selecting fuel system components which by test or by previous experience are known to be free of ice collection tendencies. Tank outlet screens (or tank-mounted pump inlet screens) may be the significant fuel system feature for further evaluation. In some instances, fuel turbulence due to pump motions may be sufficient to keep the screen clear of ice. In other instances, small screen bypass openings (approximately one-fourth inch in diameter) located outside the predominant fuel flow path have been found satisfactory.

NOTE: Advisory Circular (AC) 20-29 contains information regarding compliance with the fuel ice protection requirements of Part 25. The information in this AC is largely valid except for references to the quantity of water to be expected in fuel and the amount of additive required to ensure freedom from fuel ice hazards.

AC 29.952. § 29.952 (Amendment 29-35) FUEL SYSTEM CRASH RESISTANCE.

a. Explanation.

(1) Section 29.952 provides safety standards that minimize postcrash fire (PCF) in a survivable impact. The rule contains comprehensive crash resistant fuel system (CRFS) design and test criteria that significantly minimize fuel leaks, creation of potential ignition sources, and the occurrence of PCF. Section 29.952 accomplishes this for survivable impacts by-

(i) Providing comprehensive criteria to minimize fuel leaks and potential ignition sources;

(ii) Requiring increased crash load factors for fuel cells in and behind occupied areas to ensure the static, ultimate strength necessary for impact energy absorption, structural integrity, fuel containment, and occupant safety;

(iii) Maintaining the load factors of § 29.561 for fuel cells in other areas (particularly underfloor cells) to ensure leak-tight fuel cell deformation in energy absorbing underfloor structure without unduly crushing or penetrating the occupiable volume; and

(iv) Requiring a 50 ft. dynamic vertical impact (drop) test to measure fuel tank structural and fuel containment integrity.

(2) Section 29.952 applies to all fuel systems (including auxiliary propulsion unit (APU) systems).

(3) Some similarities exist among the fire protection requirements of §§ 29.863, 29.1337(a)(2), and 29.952. The requirements in each standard are not mutually exclusive. Overlapping requirements should be certified simultaneously.

(4) The use of bladders is not mandated as this would unduly dictate design. However, in the majority of cases, their use is necessary to meet the test requirements of § 29.952. If a design does not use bladders, the application should be treated as a new and unusual design feature that should be thoroughly coordinated with the Airworthiness Authority for technical policy to insure adequate safety. Experience has shown that bladders with wall thicknesses from 0.03 to 0.018 inches typically meet the § 29.952 test requirements.

b. Related Material. Documents shown below may be obtained from The Naval Publications and Forms Center, 5801 Tabor Avenue, Philadelphia, Pennsylvania 19120-5094, ATTN: Customer Service (NPODS).

(1) Military Specification, MIL-T-27422B, Amendment 1, April 13, 1971, Tank, Fuel, Crash-resistant Aircraft.

(2) Military Standard, MIL-STD-1290 (AV), January 25, 1974, Light Fixed and Rotary Wing Aircraft Crashworthiness.

(3) Military Standard, MIL-H-83796, August 1, 1974, Hose Assembly, Rubber, Lightweight, Medium Pressure, General Specification for.

(4) Military Specification, MIL-V-27393 (USAF), July 12, 1960, Valve, Safety, Fuel Cell Fitting, Crash Resistant, General Specification, for.

(5) Military Specification, MIL-H-25579 (USAF).

(6) Military Specification, MIL-H-38360.

(7) U.S. Army Publication USARTL-TR-79-22E, “Aircraft Crash Survival Design Guide, Volume V---Aircraft Postcrash Survival”, dated January 1989.

NOTE: Section 4, “Postcrash Fire Protection” of Volume V of the Design Guide is the modern update to MIL-STD-1290. Section 4 contains a comprehensive design guide for military CRFS designs that may be useful for civil CRFS designs.

c. Conceptual Definitions.

(1) Survivable Impact. An impact (crash) where human tolerance acceleration limits are not exceeded in any of the principal rotorcraft axes, where the structure and structural volume surrounding occupants are sufficiently intact during and after impact to constitute a livable volume and permit survival, and where an item of mass does not become unrestrained and create an occupant hazard. “Livable volume” relates to the ability of an airframe to maintain a protective shell around occupants during a crash and to minimize threats, such as accelerations, applied to the occupiable portion of the aircraft during otherwise survivable impacts. In lieu of a more rational, approved criteria, the load factors of § 29.952(b)(1) constitute the structural human survivability accelerations limits.

(2) Postcrash Fire (PCF). A fire occurring immediately after and as a direct result of an impact. The fire is either the result of fuel released from a leaking fuel system reaching an existing or a crash-induced ignition source, a crash-induced ignition source internal to an undamaged or damaged fuel system, or a combination. PCF's have an intensity range from the minimum of a small local flame to the maximum of an instantaneous massive fire or fireball (explosion).

(3) Fuel Tank or Cell. A reservoir that contains fuel and may consist of a hard shell (of a composite, metal, or hybrid construction) with either a laced-in, snapped in, or otherwise attached semirigid or flexible rubber matrix bladder (or liner), spray-on bladder, or no bladder. The hard shell may be either the airframe (integral tank) or a separate rigid tank attached to the airframe. The device has inlets and outlets for fuel transfer and internal pressure control.

(4) Ignition Source. An ignition source that when wet with fuel or in contact with fuel vapor would cause a PCF.

(5) Major Fuel System Component. A fuel system part with enough mass, installation location hazard or a combination to be structurally considered in a crash. Structural consideration is required when crash-induced relative motion can occur between the part and its surrounding structure from inertial impact forces, airframe deformation forces, or for other reasons.

(6) Drip Fence. A physical barrier that interrupts liquid flow on the underside of a surface, such as a fuel cell, and allows it to drip nonhazardously to an external drain.

(7) Flow Diverter. A physical barrier that interrupts or diverts the flow of a liquid.

(8) Frangible Attachment or Fitting. An attachment or fitting containing a part that is designed and constructed to fail at a predetermined location and load.

(9) Deformable Attachment or Fitting. An attachment or fitting containing a part that is designed and constructed to deform at a predetermined location and load to a predetermined final configuration.

(10) Self-Sealing Breakaway Fuel Fitting. A fuel-carrying in-line, line-to-firewall, bulkhead or line-to-tank connection that breaks in half and self-seals when subjected to forces greater than or equal to the unit's design breakaway force. Each half self-seals using a spring-loaded valve (e.g., trap door or equivalent means) that is normally open but is released and closed upon fitting separation. Fitting breakaway force is typically controlled by a frangible metal ring (or series of circumferential tabs) that connects the two fitting halves. Normal, fuel-tight integrity is maintained by "O" rings held under pressure by the rigid, frangible connecting ring (or tabs). When broken open, a small amount of fuel (usually less than 8 ounces) is released. This is the fuel trapped in the coupling space between the two spring-loaded valves. Once failed each coupling half may leak slightly. Typically, this leak rate should be less than 5 drops per minute per coupling half.

(11) Crash Resistant Flexible Fuel Cell Bladder. Flexible, rubberized material, usually with fibers (i.e., rubber "resin" and natural or synthetic fiber) in both the 0° (warp) and 90° (fill) directions that is used as a liner in a rigid shell or integral tank. The material acts as a membrane because, when unsupported, it can only carry pure tension loads. Therefore, it must be uniformly supported by rigid structure (reference § 29.967) so that the liner carries only compressive fluid loads and the surrounding shell structure carries the fluid-induced shear, tension, and bending loads transmitted through the liner or bladder. The material is usually secured (e.g., laced, snapped, etc.) into its surrounding structure at key locations to maintain its intended conformal shape. In many designs, lightweight spacers, such as structural foam, are used between the liner and the airframe to maintain the liners intended conformal shape and to transmit fluid loads to the airframe. The material is either qualified under TSO-C80, "Flexible Fuel and Oil Cell Material," or qualified during certification. Sections 29.952 and 29.963(b) have increased the minimum puncture resistance qualification requirement for liner material (See TSO-C80, paragraph 16.0) from 15 to 370 pounds.

(12) Crash Resistant Fuel System (CRFS). A fuel system designed and approved in accordance with § 29.952 that either prevents a PCF or delays the start of a severe PCF long enough to allow escape.

(13) As Far as Practicable. "As Far as Practicable" means that within the major constraints of the applicant's design (e.g., aerodynamic shape, space, volume, major structural relocation, etc.), this standard's criteria should be met. The level of practicability is much higher in a new design project than in a modification project. The engineering decisions, evaluations, and trade studies that determine the maximum level of practicability should be documented and approved.

(14) Fireproof. Defined in § 1.1, "General Definitions" and in AC 20-135, "Powerplant Installation and Propulsion System Component Fire Protection Test Methods, Standards and Criteria" dated February 6, 1990.

d. Procedures.

(1) Section 29.952 should be applied to all fuel system installations. Any major design change should be reevaluated for compliance with the CRFS requirements. It should be noted that most standard materials and processes are acceptable for crash resistant fuel system construction; however, magnesium, magnesium alloys, and cadmium plated parts (when exposed to fuel) are not recommended, because of their inherent ability to create or contribute to a post crash fire. Section 29.952(a) requires each tank, or the most critical tank (if clearly identified by rational analysis) to be drop tested. The tank is filled 80 percent with water and the remaining 20 percent is filled with air (or, in the case of a flexible fuel cell, the air may be evacuated by hand and the cell resealed). The tank openings, except for the vents, are closed with plugs (or other suitable means) so that they remain watertight. The vents are left open to simulate natural venting. Otherwise, the tank is flight configured. The test tanks are installed in their surrounding structure and dropped from a height of 50 feet on a nondeformable surface (e.g., concrete or equivalent). To be considered a valid test, the tank must impact horizontally ±10°. The 50-foot distance is measured between the nondeformable surface and the bottom of the tank. The ±10° attitude requirement can be ensured by using lightweight cord or a light sling to balance the tank assembly horizontally prior to being dropped. MIL-T-27422B shows a typical test setup. Tank attitude at impact should be verified by photography or equivalent means. The nondeformable floor surface should be covered by a thin plastic sheet so that any leakage is readily detected. The tank water should be tinted with dye to make leakage and seepage sources easy to identify. The tank (except for the vent openings) should be wrapped in light plastic sheet to ensure that minor leakage or seepage (and its source) is detected. Minor spillage through the open vents during the drop test is allowed. The dye should not significantly affect the water's viscosity or other physical properties that may reduce or eliminate any leakage from the drop test. The nondeforming drop test surface should be carefully reviewed. Concrete is acceptable. A fixed and uniformly supported steel plate (loaded only in uniform compression without any springback) is acceptable. Floors or floor coverings such as dirt, clay, wood, or

sand are not acceptable. Selection of the critical fuel tank is important. Factors such as size, fuel cell design and construction, and material(s) should be accounted for when selecting the critical tank. The applicant may elect to drop only a bare fuel cell, not a surrounding structural airframe segment with a fuel cell installed. If so, the applicant must show that puncture hazards to the fuel cell have been eliminated.

(i) If the applicant elects to perform the drop test with surrounding aircraft structure, the cell should be enclosed in enough surrounding structure (production or simulated) so that the airframe/fuel tank interaction during the 50-foot drop is realistically evaluated. This allows the fuel-tight integrity of the “as installed” fuel cell to be evaluated and may provide protection in some designs due to the energy absorption of the surrounding airframe when crushed by impact. This provides realistic testing of fuel cell rupture points caused by installation design features, projections, excessive deformation and local tearout of fittings, joints, or lacings. The amount of actual (or simulated) structure included in the test requires engineering evaluation, risk assessment, and detailed analysis and may require subassembly (e.g., joint) tests for proper determination. Typically, the structure surrounding and extending 1 foot forward and aft of the fuel cell is adequate. This structure has a high probability of causing crash-induced fuel cell leakage. Each application should be examined individually to include all potential structural hazards. If the surrounding structure is clearly shown not to be a contributing hazard for the drop test, and if the applicant elects to do so, the fuel cell may be conservatively dropped alone. This determination should be carefully made by a detailed engineering evaluation. The evaluation should use standard, finite element-based programs (e.g., ‘KRASH”, NASTRAN, etc.) or similar programs submitted during certification, subassembly or component tests. Elimination of the surrounding structure for the drop test configuration is not trivial. If elimination is applied for, the data should clearly and conclusively show that the surrounding structure is not an impact hazard. In any case, the drop height is a constant 50 feet. The work that determines the test article configuration should be summarized, documented, and approved.

(ii) If the drop test is used to show partial compliance with the underfloor fuel cell load factors of § 29.952(b)(3), test plans should be approved. Minor spillage from the open vents is allowed. Full compliance to these load factors should be shown by static analysis and/or tests. The intent is to provide a fuel cell that is fuel tight and does not unduly crush the occupiable volume or overly stiffen energy absorbing underfloor structure under vertical impact.

(iii) Immediately after the drop test, the tank should be placed in the same axial orientation from which it was dropped and visually examined for leakage. Minor spillage from the open vents is allowed. After 15 minutes, the tank should be reexamined and any new leakage or seepage sources noted and recorded. Any evidence of fluid on the plastic floor cover or tank wrapping sheet should be noted and recorded. Any fluid leakage or seepage constitutes a test failure. This procedure should be repeated immediately with the tank inverted and the vents plugged. The inversion procedure will identify any leak sources on the upper surfaces.

(2) Section 29.952(b) provides three sets of static load factors for design and static analysis of fuel tanks, other fuel system components of significant mass and their installations. “Installation” is structurally defined as the fuel cell’s attachment to the airframe and any additional local (point design) airframe structure affected significantly by fuel cell crash loads (i.e., that would fail or deform to the extent that a fuel spill or a ballistic hazard would occur in a survivable impact). Section 29.952(d) significantly limits the amount of local airframe structure to be considered. The provision of load factors by zone ensures the fuel-tight integrity necessary to minimize PCF in a survivable impact. Unless explicitly shown by both analysis and test that the probability of fuel leakage in a survivable impact is 1×10^{-9} or less, each tank and its installation must be designed and analyzed to one set of these load factors. Also, as stated and explained in the advisory material for § 29.561, the load factors specified by § 29.561(d) are for the airframe structure surrounding the fuel cell only. The fuel cells themselves (and any fuel system components of significant mass in the underfloor area) and their attachments to the surrounding airframe structure are subject to the load factors of § 29.952(b)(3).

(i) Section 29.952(b)(1) provides load factors for the design and static analysis of fuel cells and their attachments inside the cabin volume. These load factors are provided to prevent crash-induced fuel cell ballistics hazards to and fuel spills (that may cause a PCF) directly on occupants from local structural failures in a survivable impact.

(ii) Section 29.952(b)(2) provides load factors for design and static analysis of fuel cells and their attachments located above or behind the cabin volume. These load factors are provided to prevent injury or death from a fuel cell behind or above the occupied volume that is loosened by impact and to prevent fuel spills (which may cause a PCF) in a survivable impact.

(iii) Section 29.952(b)(3) provides load factors identical to those of § 29.561 for design and static analysis of fuel cells and attachments located in areas other than inside, behind, or above the cabin volume. Since many fuel cells are located under the cabin floor, these load factors provide fuel-tight structural protection in a survivable impact.

(iv) For some crash resistant semi-rigid bladder and flexible liner fuel cell installations, the 50-foot drop test (reference § 29.952(a)) can (with some additional rational analysis) simultaneously satisfy both the drop test requirement and the vertical down load factor ($-N_Z$) requirement of § 29.952(b)(3) for the fuel cell itself and its installation. This approach reduces the certification burden.

(v) For applicants that seek to substantiate the $-N_Z$ load factor requirement of § 29.952(b)(3) using the 50-foot drop test, additional substantiation is required for § 29.952(b)(3) (as is currently practiced) for the fuel cell under the loading of the remaining three load factors and the remaining rotorcraft structure under the

loading of all four load factors. In some cases, substantiation of the remaining three load factors can be further simplified by a successful drop test if the fuel cell is symmetric (i.e., structurally equivalent in all four directions).

(3) Section 29.952(c) requires self-sealing breakaway fuel fittings at all fuel tank-to-line connections, tank-to-tank interconnects, and other points (e.g., fuel lines penetrating firewalls or bulkheads) where a reasonable probability (as determined by engineering evaluation, service history, analysis, test or a combination) of impact-induced hazardous relative motion exists that may cause fuel leakage to an ignition source and create a PCF during a survivable impact. In some coupling installations (such as fuel line-to-fuel tank connections), the tank coupling half should be sufficiently recessed into the tank or otherwise protected so that hazardous relative motion (of the fuel cell relative to its surroundings) following an impact-induced coupling failure does not cause a tearout or deformation of the tank half of the separated coupling that would release fuel. The only exceptions are either-

(i) Installations that use equivalent devices such as extensible lines (hoses with enough slack or stretch to absorb relative motion without leakage) or motion absorbing fittings (rotational or linearly extensible joints); or

(ii) Installations that conclusively show by a combination of experience, tests, and analysis to have a probability of fuel loss to an ignition source in a survivable crash of 1×10^{-9} or less.

(4) Section 29.952(c)(1) specifies the basic design features required for self-sealing breakaway couplings.

(5) Section 29.952(c)(1)(i) defines the design load (strength) conditions necessary to separate a breakaway coupling. These loads should be determined from analysis and/or test, reference paragraph d(6). The minimum ultimate failure load (strength) is the load that fails the weakest component in a fluid-carrying line based on that component's ultimate strength. This load comes from local deformation between the coupling and its surrounding structure during a worst-case survivable impact. A failure test of three specimens of the weakest component in each line that contains a coupling should be conducted in the critical loading mode. (If a single critical loading mode cannot be clearly identified, each of the three most critical loading modes should be tested.) The three specimen test results should be averaged. The average value is then used to size the breakaway fuel coupling. [For standard specification (i.e., "off the shelf") hardware, equivalent testing may have already been accomplished and, if no other mitigating circumstances in the design and installation exist, need not be repeated.] To assure separation of the coupling prior to fuel line failure and to prevent inadvertent actuation, the design load that separates the coupling should be between 25 and 50 percent of the minimum ultimate failure load (strength) of the line's weakest component. The critical loads should be compared to the normal service loads calculated and measured at the coupling location to insure unintended service failures do not occur. Typically this criterion is readily satisfied by the natural design because

working loads are much less than crash-induced loads. A separation load less than 300 pounds should not be used regardless of the line size. The minimum 300-pound load is necessary to prevent ground maintenance failures. A fatigue analysis and/or test (reference paragraph d(10)) should be performed to ensure the installation is either a safe-life design or has a conservative, mandatory replacement time. The simplified method of section 9(a) of AC 20-95 may normally be used because of the low ratio of working-load-to-crash-induced failure load. However, since fatigue failures have occurred in service, all fatigue sources (especially high-cycle vibratory sources) should be evaluated. Fracture critical materials should be avoided, and damage tolerant materials utilized. Also, if airframe deformation due to flight loads is significant, its effect on the couplings should be checked to ensure that static or low-cycle fatigue failures do not occur prior to the part's intended retirement life. Large flight load deformations are not usually present in rotorcraft.

(6) Section 29.952(c)(1)(ii) requires a self-sealing breakaway coupling to separate when the minimum breakaway load (reference paragraph d(5) and § 29.952(c)(1)(i)) is met or exceeded in a survivable impact. The loading modes (each of which produces a breakaway load) are determined by analyzing and/or testing the surrounding structure to determine the probable impact forces and directions. The modes usually occurring are tension, bending, shear, compression, or a combination (reference figure AC 29.952–1). The coupling should be designed and tested to separate at the lowest ultimate impact load (lowest critical mode) as long as the minimum working load criterion of § 29.952(c)(1)(i) is also satisfied. Each breakaway coupling design should be tested in accordance with the following (reference MIL-STD-1290) or equivalent procedures. It should be noted that the ratio of the ultimate failure load of the weakest component in the fuel line and the normal service load (i.e., the peak load or approved clipped peak load experienced during a typical flight) of that component should be as high as possible and still meet the other load criteria of this section. Typically, this ratio should not be less than 5.

(i) Static Tests. Each breakaway coupling design should be subjected to tension and shear loads to verify and establish the design load required for separation, nature of separation, leakage during valve actuation, general valve functioning, and leakage following valve actuation. The rate of load application should not be greater than 20 inches per minute. Tests to be used where applicable are shown in figure AC 29.952-1.

(ii) Dynamic Tests. Each breakaway coupling design should be proof-tested under dynamic loading conditions. The couplings should be tested in the three most likely anticipated modes of separation as defined in paragraph d(5). The test configurations should be similar to those shown in figure AC 29.952-1. The load should be applied in less than 0.005 second, and the velocity change experienced by the loading jig should be 36 ±3 feet per second.

(7) Section 29.952(c)(1)(iii) requires that breakaway couplings be visually inspectable to determine that the coupling is locked together (fuel-tight) and remains

open during normal operations. Visual means (such as, an axial misalignment between the two coupling halves, a designed-in visual indicator, a combination or other acceptable criteria) should be considered and specified in the maintenance manual rejection criteria for operational inspections. Inspectability and phased inspection requirements should be evaluated. Special inspections after severe maneuvers or hard landings should be required.

(8) Section 29.952(c)(1)(iv) requires breakaway couplings to have design provisions that prevent uncoupling or unintended closing by operational shocks, vibrations, or accelerations. These provisions depend on both the coupling's design and installation location. The structural environment should be defined, analyzed, and compared with coupling specifications and certification data so that inadvertent decoupling or closing does not occur. A phased inspection requirement should be considered.

(9) Section 29.952(c)(1)(v) requires a coupling design to not release more than its entrapped fuel quantity when the coupling has separated and each end is sealed off. The entrapped fuel is determined by the coupling design and is essentially the fuel trapped between the seals when separation occurs (See breakaway coupling definition). This is usually less than 8 ounces of fuel per coupling. Most coupling designs will leak slightly after separation. This is acceptable but the leak rate should be 5 drops per minute, or less, per coupling half. Specifications defining the entrapped volume of fuel should be approved. If the coupling is not approved or manufactured to an acceptable military or civil specification, the qualification testing of d(6) should be conducted.

(10) Section 29.952(c)(2) requires that each breakaway coupling or equivalent device either in a single fuel feed line or a complex fuel feed system (e.g. a multiple feed line or multitank cross feed system) be designed, tested, installed, inspected, maintained, or a combination, so that the probability of inadvertent fuel shutoff in flight is 1×10^{-5}, or less, as required by § 29.955(a). This should be determined by reliability and failure analysis, other analysis, tests, or a combination and should be documented and approved. Continued airworthiness should be ensured by phased inspections, specific component replacement schedules, or a combination. This section also requires each coupling or equivalent device to meet the fatigue requirements of § 29.571 to prevent leakage. (See the fatigue discussion in paragraph d(5).) The typical method of compliance with § 29.571 used for rotor system parts may not be necessary to meet § 29.952(c)(2). An S-N curve may not need to be generated using full-scale specimen fatigue tests if the conservative method of Section 9(a) of AC 20-95, "Fatigue Evaluation of Rotorcraft Structure" can be applied successfully.

(11) Section 29.952(c)(3) requires that an equivalent device, used instead of a breakaway coupling, not produce a load, during or after a survivable impact, on the fuel line to which it attaches greater than 25-50 percent of the ultimate load (strength) of the line's weakest component. This minimizes crash-induced fuel spills that may cause a PCF. The ultimate strength of the weakest component should be determined by

analysis and/or tests. At least three specimens of the component should be tested to failure in the critical loading mode and the results averaged. [For standard specification (i.e., “off the shelf”) hardware, equivalent testing may have already been accomplished and, if no other mitigating circumstances in the design and installation exist, need not be repeated.] The average value is then used to size the equivalent device. Each equivalent device must meet the fatigue requirements of § 29.571 to prevent fatigue-induced leakage. Equivalent devices should be statically and dynamically tested in an identical manner (where feasible) to breakaway couplings (reference paragraph d(6)). All fuel hoses and hose assemblies (whether or not they are used in lieu of breakaway fittings) should meet the following (reference MIL-STD-1290) or equivalent requirements. Any stretchable hoses used as equivalent devices should be able to elongate a minimum of 20 percent without leaking fuel. All other hoses used as equivalent devices should have a minimum of 20-30 percent slack. It should be noted that the ratio of the ultimate failure load of the weakest component in the fuel line and the normal service load (i.e., the peak or approved clipped peak load experienced during a typical flight) of that component should be as high as possible and still meet the other load criteria of this section. Typically, this ratio should not be less than 5.

(i) All hose assemblies should meet or exceed the cut resistance, tensile strength, and hose-fitting pullout strength criteria of MIL-H-25579 (USAF), MIL-H-38360, or equivalent standards.

(ii) Hoses should neither pull out of their end fittings nor should the end fittings break at less than the minimum loads shown in figure AC 29.952-3 when the assemblies are tested as described in d(11)(iii) below. In addition to the strength requirements, the hose assemblies should be capable of elongating to a minimum of 20 to 30 percent by stretch, slack, or a combination without fluid spillage.

(iii) Hose assemblies should be subjected to pure tension loads and to loads applied at a 90° angle to the longitudinal axis of the end fitting, as shown in figure AC 29.952-2. Loads should be applied at a constant rate not exceeding 20 inches per minute.

(12) Section 29.952(d) requires frangible or deformable structural attachments to be used to install fuel tanks and other major system components to each other and to the airframe when crash-induced hazardous relative motion could cause local rupture and tearout of the component, spill fuel to an ignition source, and create a PCF. If it can be conclusively determined that the probability of fuel spillage is 1×10^{-9} or less, no further action is required. Typically, frangible designs are much easier to certify than deformable designs because the scatter in failure loads is much less. Also, some standard frangible military hardware (e.g., frangible bolts) is readily available. This is not so for deformable designs. Each frangible or deformable structural attachment and its installation should be reviewed to insure that, after an impact failure (i.e., separation or deformation), it does not become a puncture or tear-out hazard and cause fuel spillage.

(13) Section 29.952(d)(1) defines the impact design load conditions necessary to deform a deformable attachment or to separate a frangible attachment. These loads should be determined from analysis and/or test (reference paragraph d(14)), and verified during certification. All impact loading modes (tension, bending, compression, shear, and a combination) should be analyzed and the minimum critical frangible or deformable design load determined, based on the ultimate strength of the attachment's weakest component. The critical load should be compared to the normal service loads calculated and measured at the attachment's location to insure unintended service failures do not occur. (Normally, this criterion is readily satisfied because working loads are much less than impact loads.) A fatigue check should be conducted to ensure that the attachments meet the requirements of § 29.571. Typically, this can be accomplished using the simplified method of Section 9(a) of AC 20-95 because of the low ratio of working-load-to-crash-induced failure load. However, because of service history, all fatigue sources (especially high cycle vibratory sources) should be reviewed. The standard method of compliance with § 29.571 used for rotor system parts may not be necessary to meet § 29.952(d)(3). An S-N curve may not need to be generated using full-scale specimen fatigue tests, if the conservative method of Section 9(a) of AC 20-95 can be applied successfully. Fracture critical materials should be avoided and ductile, damage tolerant materials utilized. Phased inspections to ensure continued airworthiness should be considered. Special inspections after severe maneuvers or hard landings should be required. A breakaway or deformation load less than 300 pounds (based on maintenance considerations) is not permitted. If airframe deformation due to flight loads is significant, its effect should be checked to ensure that a static failure or low cycle fatigue failure does not occur. Large flight load deflections are not usually present in rotorcraft.

(14) Section 29.952(d)(2) requires a frangible or locally deformable attachment to function when the minimum breakaway or deformation load (reference § 29.952(d)(1)) is met or exceeded in a survivable impact. The minimum breakaway or deformation load is the load that either breaks or deforms each of the frangible or deformable attachment(s) of each fuel cell, fuel line, or other critical fuel system component to the airframe. Each breakaway/deformation load must be between 25 percent to 50 percent of the load which would cause failure (i.e., impact induced tearout and subsequent fuel leakage) of the attachment to fuel cell, fuel line, or other critical component interface. This is necessary in some installations to prevent tearout of the structural attachment from the fuel cell component to which it is attached and the resultant fuel leakage in a survivable impact. The primary loading modes (each of which will produce a breakaway or deformation load) must all be considered to determine the minimum load. This is done by analyzing the surrounding structure (reference paragraph d(13)) to determine the three most probable impact failure forces and their directions. The attachment should then be tested to insure it breaks or deforms at the lowest ultimate crash (impact) load as long as the minimum working load criterion of § 29.952(d)(1) is also satisfied. It should be noted that the ratio of the ultimate failure load of the weakest component in the frangible or deformable component's load path and the normal service load (i.e., the peak load or approved clipped peak load experienced during a typical flight) of that component should be as

high as possible and still meet the other load criteria of this section. Typically this ratio should not be less than 5. The following certification tests (reference MIL-STD-1290) or equivalent should be conducted on each frangible or deformable attachment design.

(i) Static Tests. Each frangible or deformable device should be tested in the three most likely anticipated modes of failure as defined in paragraph d(13). Test loads should be applied at a constant rate not exceeding 20 inches per minute until failure occurs.

(ii) Dynamic Tests. Each frangible or deformable attachment should be tested under dynamic loading conditions. The attachment should be tested in the three most likely failure modes as determined in paragraph d(13). The test load should be applied in less than 0.005 second, and the velocity change experienced by the loading jig should be 36 ±3 feet per second. It should be noted that the dynamic load pulse is a ramp function starting at either 0 or some small test fixture preload and reaching the previously determined failure load in 0.005 seconds. The velocity change of the test jig is also a ramp function starting at 0 and reaching a final velocity of 36±3 ft./sec. in 0.005 seconds. These ramps functions simulate the dynamic conditions of a survivable impact under which the frangible/deformable attachment must perform its intended function.

(15) Section 29.952(d)(3) requires a frangible or locally deformable attachment to meet the fatigue requirements of § 29.571 to eliminate premature fatigue failure. The simplified method of AC 20-95 may be used. Because of service history, all fatigue sources (especially high-cycle vibratory sources) should be reviewed. Fracture critical materials should be avoided and ductile, damage tolerant materials utilized.

(16) Section 29.952(e) requires that, as far as practicable, fuel and fuel containment devices be adequately separated from occupiable areas and potential ignition sources. Several generic categories of ignition sources and potential PCF-producing contact scenarios exist. The intent of the section is to define all possible leak and ignition sources that could be activated in a survivable impact and to provide design features to eliminate or minimize them such that the occurrence of PCF is minimized and escape time is maximized. Adequate separation should be accomplished by a thorough design review, potential PCF hazard analysis, and detailed design trade studies. The resultant findings should be documented and approved. The following PCF hazards and any other such hazards should be documented, minimized by design to the maximum practicable extent, and their resolution documented and FAA/AUTHORITY approved. Conditions to be reviewed should include, but are not limited to, the following:

(i) High temperature ignition sources.

(A) Tank fillers or overboard fuel drains should not be located adjacent to engine intakes or exhausts so that fuel vapors could be ingested and ignited.

(B) Fuel lines should not be located in any occupiable area unless they are shrouded or otherwise designed to prevent spillage and subsequent ignition during and immediately following a survivable impact.

(C) Fuel tanks should not be located in or immediately adjacent to engine compartments, engine induction or exhaust areas, heaters, bleed air ducts, hot air-conditioning ducts, or any other hot surface.

(D) Fuel lines should be kept to a minimum in the engine compartment. Fluid lines should not be located immediately adjacent to engine exhaust areas, heaters, bleed air ducts, hot air-conditioning ducts, or any other hot surface.

(E) Fuel lines should not be located where they can readily spill, spray, or mist onto hot surfaces or into engine induction or exhaust areas. These locations should be determined for each aircraft design by considering probable structural deformation hazards in relation to the fuel system.

(ii) Electrical ignition sources.

(A) Fuel tanks and lines should not be located in electrical compartments.

(B) Electrical components and wiring should be separated from fuel lines and vent openings kept to a minimum in fuel areas.

(C) Electrical wiring should be hermetically sealed, and equipment should be explosion proofed in areas where they are immersed in or otherwise directly subjected to fuel and vapors and should meet § 29.1309 or should be otherwise protected such that ignition is extremely improbable.

(D) Electrical sensor lines that penetrate fuel tank walls should be protected from abrasion or guillotine cutting during a survivable impact by use of potting, rubber plugs or grommets, or other equivalent means and should be designed with sufficient local slack, or equivalent means, to prevent both the wires and their protective mountings from being cut by or torn from fuel tank walls by local deformation.

(E) Electrical wires should be designed with sufficient slack or equivalent means to accommodate structural deformation without creating an ignition source.

(F) Electrical wires that could be subjected to severe local abrasion, cutting, or other damage during a survivable impact should be protected locally by nonconductive shields or shrouds.

(G) Electrical wires that are not sufficiently separated from heat or ignition sources to avoid potential contact during a survivable impact should be locally shrouded with a nonconductive fireproof shroud.

(iii) Friction spark, chemical, and electrostatic ignition sources. Fuel lines and tanks should be designed and located to eliminate fuel or fuel vapor ignition from potential mechanical friction spark ignition sources, chemical ignition sources, and electrostatic ignition sources having a high probability of being activated or created during a survivable impact.

(iv) Separation of fuel tanks and occupiable areas. Fuel tanks should be located as far as practicable from all occupiable areas. This minimizes potential PCF sources in occupiable areas and the potential for occupant saturation with fuel on impact. The design should be reviewed to minimize these potential hazards. Fuel tanks should also be removed, as far as practicable, from other potentially hazardous areas such as engine compartments, electrical compartments, under heavy masses (e.g., transmissions, engines, etc.), over landing gear, and other probable areas of significant impact damage, including rollover and skidding damage.

(v) Fuel Line Shielding. Areas of the fuel line system where the probability of spilled fuel reaching potential ignition sources or occupiable areas is greater than extremely improbable should be shielded with drainable fireproof shrouds. Shrouds should be drainable to allow periodic inspections for internal fuel leaks. The design should be reviewed to ensure these criteria are met.

(vi) Flow Diverters and Drain Holes.

(A) Drainage holes should be located in all fuel tank compartments to prevent the accumulation of spilled fuel within the aircraft. Holes should be large enough to prevent clogging by typical debris and to prevent fluid accumulation from surface tension force blockage.

(B) Drip fences and drainage troughs should be used to prevent gravity-induced flow of spilled fuels from reaching any ignition sources such as hot engine areas, electrical compartments, or other potential hot spots. Drip fences and troughs are also necessary to prevent PCF by routing spilled fuel around ignition sources to drainage holes to minimize fuel accumulation inside the fuselage. Recurring inspection requirements to ensure holes and troughs remain airworthy should be identified. These criteria should be met, as far as practicable, for all postcrash attitudes. This is readily accomplished for the standard landing attitude, but is more difficult for other abnormal attitudes. However, the design should be thoroughly reviewed to insure maximum compliance without adversely impacting other safety and design criteria such as aerodynamic smoothness.

(vii) Fuel Drain System. The fuel drain system and its attachments to the airframe should be designed and constructed, as far as practicable, to be crash resistant. The following and other appropriate means should be considered for a crash resistant design. Tank drains should be recessed or otherwise protected so that they are minimally damaged by impact. Attachment of fuel drains to the airframe should be made with either frangible fasteners or equivalent means to prevent impact induced

tearout and leakage. The number of drains should be minimized by design techniques such as those that avoid low points in the lines. Drain lines should be made of ductile materials or otherwise designed to provide impact tolerance. Drain line connections, fittings, and other components should be designed to meet the fatigue requirements of § 29.571 and § 29.952(d)(3). This ensures that unintended partial or full fatigue failures do not occur in normal operations that, if undetected, could compromise the CRFS's intended level-of-safety for the mitigation of post crash fire in a survivable impact. Drain valves should be designed to have positive locking provisions in the closed position in accordance with § 29.999(b)(2).

(17) Section 29.952(f) specifies that fuel tanks, fuel lines, electrical wires, and electrical devices must be designed and constructed, as far as practicable, to be crash resistant. Typical mechanical design criteria necessary to minimize fuel spillage sources, ignition sources, and their mutual contact in a survivable impact (i.e., provide crash resistance) are stated by the following subparagraphs. These mechanical design criteria should be incorporated in each design to the maximum practicable extent. Compliance is accomplished and assessed by a thorough design review and potential PCF hazard analysis with findings and solutions that are documented and approved. Any additional PCF hazards that are identified should be documented, included, addressed equally, and eliminated to the maximum practicable extent. Engineering evaluation, analysis, and tests are all required to determine the maximum level of practicability.

(i) They should not initiate or contribute to a post crash fire in an otherwise survivable impact. A hazard analysis should show which components are critical in this regard and should be assessed in detail for hazard elimination purposes.

(ii) Fuel and electrical lines and components should be located away from each other, away from probable crash impact areas, and away from areas where structural deformation or large objects (such as engines or transmissions) may, by crushing or penetration, cause fuel spillage or create an electrical ignition source, or both.

(iii) Fuel and electrical lines and components should be located separately and away from areas where impact and severing by rotor blades during a survivable impact are probable.

(iv) Fuel and electrical lines and components should be in no danger of being punctured or severed during a survivable impact by locally stiff vertical understructure such as a collapsed landing gear strut.

(v) Fuel and electrical lines and components should be routed separately in areas of maximum protection, such as along heavier structural members, and away from areas where significant damage is probable.

(vi) Fuel and electrical lines and components running through hazardous areas or directly through structure, such as a bulkhead, should be locally separated and protected from over-extension, severe abrasion and guillotine cutting by frangible panels, suitable clearance, rubber grommets, braided armor shielding (which should be nonconductive for electrical lines), or other equivalent means.

(vii) Fuel lines routed directly to instruments, transducers, or other equivalent devices should be crash resistant, in accordance with § 29.1337(a)(2), to minimize leakage in case of line rupture induced during a survivable impact.

(viii) Electrical wires routed directly into electrical boxes or instruments should be designed with sufficient local slack and locally routed in the least probable damage direction and zone, or otherwise protected to minimize the probability of damage-induced arcing.

(ix) Fuel lines routed directly into fuel tanks or other fuel system components should be locally routed in the least probable damage direction and zone, or otherwise protected, to minimize the probability of damage-induced fuel leaks.

(x) Fuel pumps mounted inside fuel tanks should be rigidly attached to the fuel tank only. If the pump is airframe mounted and has structural significance, it should have a frangible or deformable attachment (reference paragraph d(12)). Electrical boost pumps, if used, should be installed with a minimum of 6 inches of slack wire at the pump connection. The pump wires should be shrouded to prevent cutting in a survivable impact. Nonsparking, breakaway wire disconnects or other equivalent means may be used in lieu of the 6 inches of slack wire.

(xi) Fuel filters and strainers, to the maximum practicable extent, should not be located in or adjacent to the engine intake or exhausts and should retain the smallest practicable quantity of fuel.

(xii) The number of fuel valves should be kept to a minimum. If electrically operated valves are used, they should be installed with a minimum of 6 inches of slack in the electrical lines, unless protected by equivalent means (reference 17(i)). The valves should be installed with the maximum amount of protection and separation of the electrical wires from the remainder of the valve assembly.

(xiii) Fuel quantity indicators mounted in or on fuel tanks should be selected, designed, and installed to provide the minimum puncture or tear hazard to the fuel tank in a survivable impact.

(xiv) Fuel tank and bladder enclosures should have smooth, regular shapes that avoid sharp edges and corners. Minimum concave and convex radius design criteria should be developed and adhered to. Magnesium should not be used in fuel cells, and any cadmium-plated parts should not be exposed to fuel.

(xv) Any shielding of electrical wires from abrasion, cutting, or overextension must be nonconductive.

(xvi) All fuel line installations not containing breakaway couplings should be reviewed to insure that they will not be overtensioned in a survivable impact, that they are properly grouped and properly exit fuel tanks, firewalls, and bulkheads in the area of least probable damage, and that their number and lengths are safely minimized.

(xvii) Crash resistance guidance for other basic components is contained in related paragraphs such as AC 29.963 (§ 29.963, bladders and liners), AC 29.973 (§ 29.973, fuel tank filler connections) and AC 29.975 (§ 29.975, fuel tank vents).

(18) Section 29.952(g) requires rigid or semirigid fuel tank or bladder walls of any material construction to be both impact and tear resistant. This minimizes a PCF from impact-induced rupture and tear.

(i) A rigid tank or bladder can resist fluid pressure loads as a flat plate in bending. A semirigid tank can resist fluid pressure loads partially as a flat plate in bending and partially as a membrane in tension. Flexible liners are exempt from the requirements of § 29.952(g) since an unsupported flexible liner can resist only pure tension loads acting as a membrane (i.e., it has negligible bending strength). The rigid shell structure required by § 29.967(a)(3) that surrounds the flexible liner (membrane) carries the crash-induced impact and tear loads; whereas, the flexible liner is only significantly loaded in tension if the shell structure is penetrated by a sharp object on impact.

(ii) For metallic tanks, rigid or semirigid composite tanks (resin matrix), semirigid bladder designs (rubber matrix), metal-composite hybrid designs, and all other tank designs, impact and tear resistance should be shown by analysis and tests.

(iii) Designs using resin matrix composites should be subjected to the composite structure substantiation guidance of AC 20-107A, Composite Aircraft Structure, dated April 25, 1984, and paragraph AC 29 MG 8. Designs using rubber matrix composites are subject to the standard substantiation requirements for these devices, such as TSO-C80.

(iv) One set of crash resistance tests that constitutes an acceptable method of substantiation to the requirements of § 29.952(g) for all tank designs regardless of the materials used are those specified in paragraphs 4.6.5.1 (Constant Rate Tear); 4.6.5.2 (Impact Penetration); 4.6.5.3 (Impact Tear); 4.6.5.4 (Panel Strength Calibration); and 4.6.5.5 (Fitting Strength) of MIL-T-27422B, “Military Specification; Tank, Fuel, Crash-Resistant Aircraft.” These test requirements, or equivalent means, should be applied for and discussed early in certification. If the MIL-T-27422B tests are selected, severity differences between military combat requirements and the civil environment should be accounted for by reducing the MIL-T-27422B requirements, as follows:

(A) Constant Rate Tear. The minimum energy for complete separation should be 200 foot-pounds (reference 4.6.5.1).

(B) Impact Penetration. The drop height of a 5-pound chisel should be reduced to 8.0 feet (reference 4.6.5.2).

(C) Impact Tear. The drop height of a 5-pound chisel should be reduced to 8.0 feet and the average tear criteria should not exceed 1.0 inch (reference 4.6.5.3).

(19) Section 29.952(g) also requires that all fuel tank designs (regardless of the materials utilized and whether or not a flexible liner of any type is used) for each tank or the most critical tank be analyzed and tested to the criteria of § 29.952 d(18)(iv), or equivalent.

(20) Any type of flexible liner or bladder used in any type of fuel tank construction (integral, hard shell, etc.) must meet the strength and puncture resistance requirements of § 29.963(b). Section 29.963(b) contains the new puncture resistance requirement for flexible liners and other liner material certification requirements. Unlined, bladderless fuel tanks are also required to meet this requirement. Most unlined, rigid fuel cell designs should readily exceed the 370-pound minimum puncture force requirement because of overriding design requirements and material characteristics, such as stiffness and ductility.

NOTE: TSO-C80, “Flexible Fuel and Oil Cell Material,” is referenced in the advisory material for § 29.963(b) and contains the detailed qualification requirements for these materials. The current puncture resistance test of TSO-C80, paragraph 16.0, states that the force required to puncture the bladder material must be greater than or equal to 15 pounds (e.g., screwdriver test). Section 29.963(b) has increased the TSO paragraph 16.0 puncture force value to be greater than or equal to 370 pounds. This is for fuel cell bladder or liner material only. Oil cell material puncture force requirements are not changed.

e. Typical Examples of Loading Modes and Test Setups for CRFS Components. The following figures, which are referred to periodically in the advisory circular, show typical examples of test setups for CRFS components such as breakaway fuel fittings, hoses, hose end fittings, and hose assemblies.

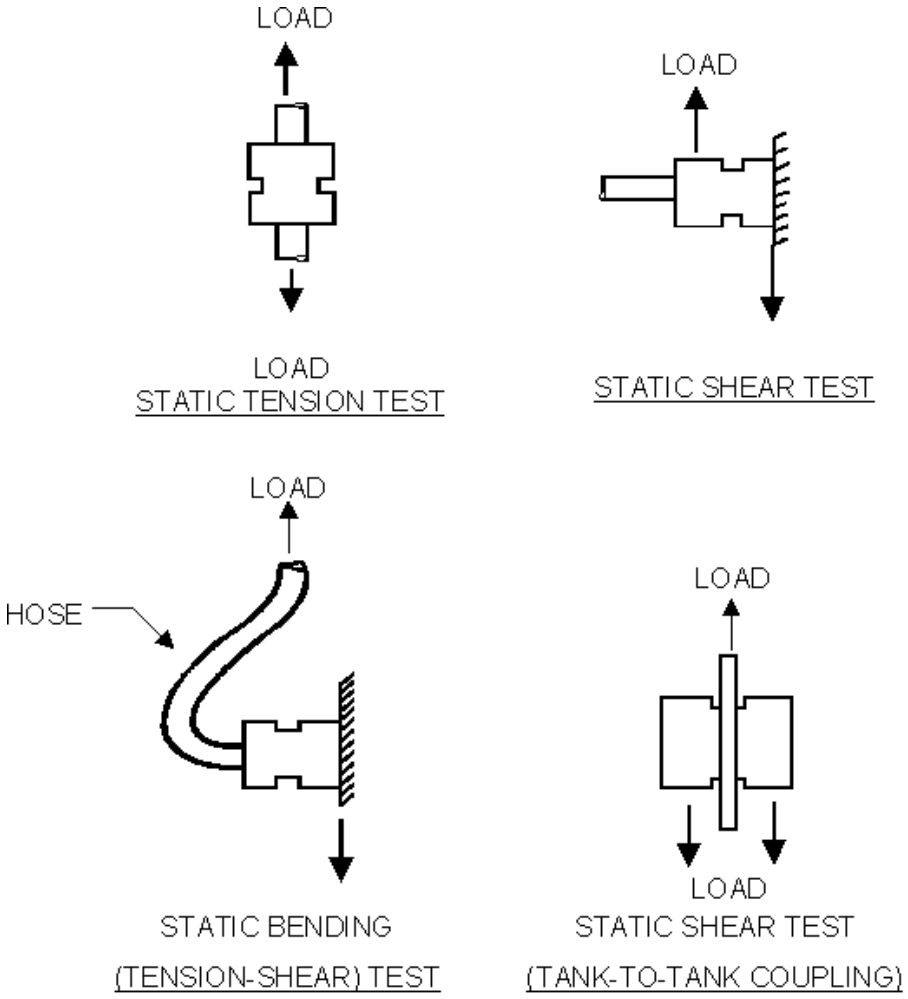

FIGURE AC 29.952-1 STATIC TENSION AND SHEAR LOADING MODES

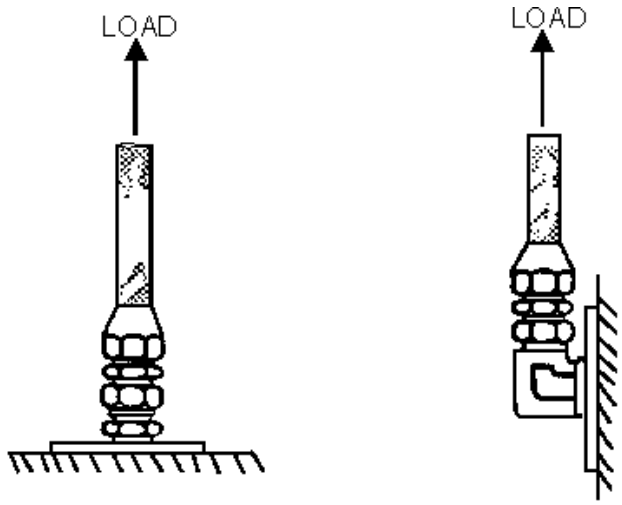

TENSION TESTS

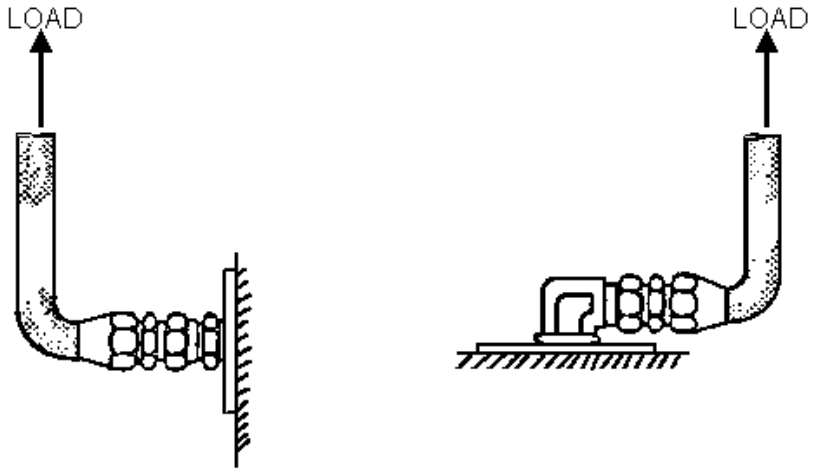

90-DEGREE TESTS

FIGURE AC 29.952-2 HOSE ASSEMBLY TESTS

Hose End Fitting Type	Fitting Size	Tension Load (lb)		Bending Load (lb)	
		Minimum Average Load*	Minimum Individual Load	Minimum Average Load*	Minimum Individual Load
STRAIGHT	-4	600	475	425	400
Tension = 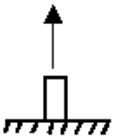	-6	700	575	425	400
	-8	900	650	650	600
	-10	1450	1175	675	625
Bending = 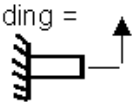	-12	1775	1475	950	850
	-16	2125	1825	1425	1300
	-20	2375	2075	1550	1425
90° ELBOW	-4	600	475	425	400
Tension =	-6	700	575	425	400
	-8	900	650	450	400
	-10	1450	1175	475	425
Bending = 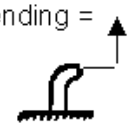	-12	1775	1475	500	450
	-16	2125	1825	775	700
	-20	2375	2075	1100	1000

*Average of at least 3 tests.

FIGURE AC 29.952-3 MINIMUM AVERAGE AND INDIVIDUAL LOADS FOR HOSE AND HOSE-END FITTING COMBINATIONS

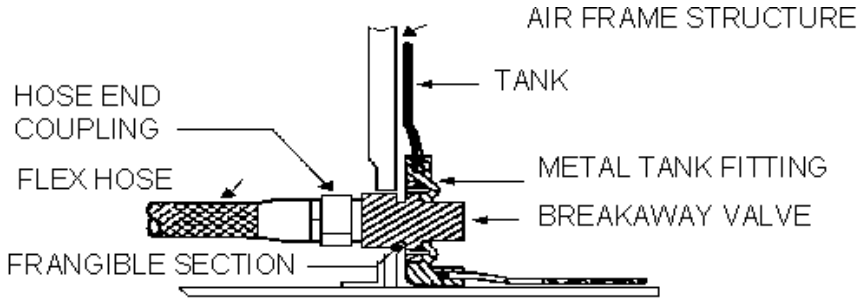

ITEM	LOWEST FAILURE LOAD (LB)*	FAILURE MODE
Flex Hose	**3000**	**Tension Breakage**
Flex Hose	**1500**	**Pull Out of End Fitting**
Tank Fitting	**7500**	**Pull Out of Tank**
Hose End Coupling	**1650**	**Break (Bending)**
Breakaway Valve	**2500**	**Pull Out of Tank Fitting**
Breakaway Valve	**Not More Than** $\frac{1500}{2} = 750$ **Not Less Than** $\frac{1500}{4} = 375$	**Break at frangible Section**

*Loads may or may not be representative; values are for explanatory purposes only.

FIGURE AC 29.952-4 TYPICAL METHOD OF BREAKAWAY FUEL FITTING LOAD CALCULATIONS (TANK INSTALLATION USED AS EXAMPLE ONLY; BASIC TECHNIQUE APPLICABLE TO OTHER CONFIGURATIONS)

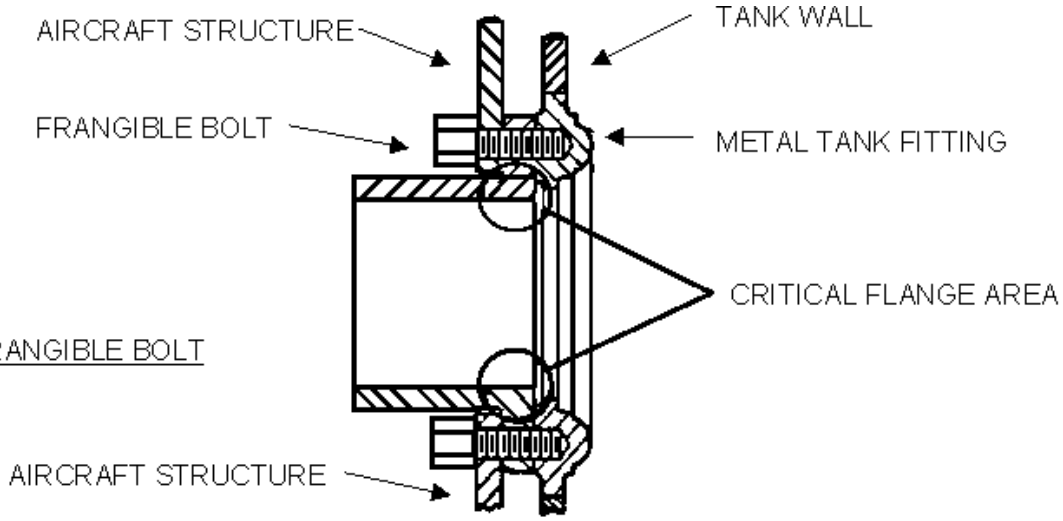

A. FRANGIBLE BOLT

ITEM	LOWEST FAILURE LOAD (LB)*		FAILURE MODE
AIRCRAFT STRUCTURE	4000		SHEAR
TANK FITTING	3000		PULLOUT OF TANK
FLANGE	5000		SHEAR
FRANGIBLE BOLT	NOT MORE THAN $\frac{3000}{2} = 1500$	NOT LESS THAN $\frac{3000}{4} = 750$	BREAK (TENSION-SHEAR)

FIGURE AC 29.952-5 TYPICAL METHODS OF FRANGIBLE OR DEFORMABLE ATTACHMENT LOAD CALCULATIONS: EXAMPLE 1, FRANGIBLE BOLTS.

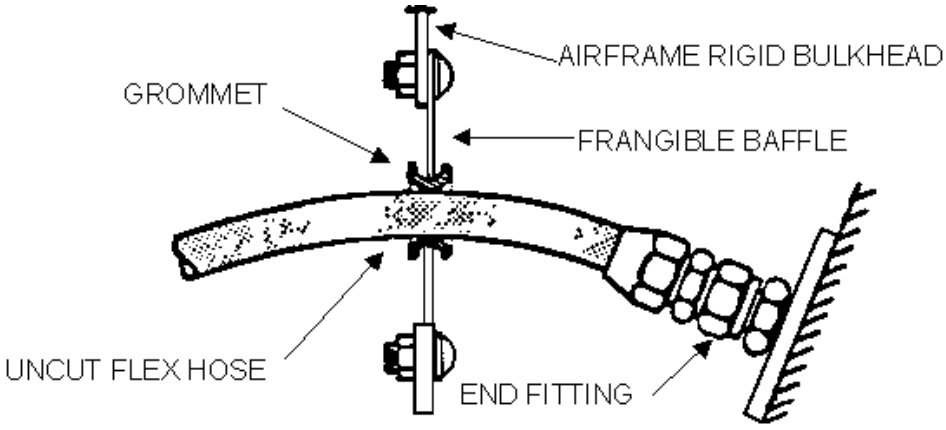

ITEM	LOWEST FAILURE LOAD (LB)*		FAILURE MODE
RIGID BULKHEAD	4000		BEARING
FLEX HOSE	3000		TENSION BREAKAGE
FLEX HOSE	1500		PULLOUT OF END FITTING
END FITTING	1750		BENDING
FRANGIBLE BAFFLE	NOT MORE THAN $\frac{1500}{2} = 750$	NOT LESS THAN $\frac{1500}{4} = 375$	BEARING

*VALUES ARE SHOWN FOR EXPLANATORY PURPOSES ONLY

FIGURE AC 29.952-6 TYPICAL METHODS OF FRANGIBLE OR DEFORMABLE ATTACHMENT LOAD CALCULATIONS: EXAMPLE 2, FRANGIBLE BAFFLE.

AC 29.953. § 29.953 FUEL SYSTEM INDEPENDENCE.

a. Explanation.

(1) Section 29.953(a)(1) stipulates that fuel systems for Category A rotorcraft must meet the requirements of § 29.903(b) engine isolation.

(2) Section 29.953(a)(2) specifies independent fuel feed systems for each engine for Category A rotorcraft unless other provisions are made to meet the § 29.903(b) engine isolation requirement.

(3) Section 29.953(b) specifies independent fuel feed systems for each engine for Category B rotorcraft, except that separate fuel tanks are not required.

b. Procedures.

(1) The purpose of § 29.953(a) is to ensure an independent fuel supply system for each engine. Multiengine Category B rotorcraft do not require separate fuel tanks, as are intended for Category A.

(2) The assessment to ensure compliance with § 29.903(b), engine isolation, should include consideration of component failure, malfunction, and damage. For multiengine Category B rotorcraft, leakage of the fuel cell could be excluded from consideration since § 29.953(b) explicitly states that separate fuel tanks are not required for this category rotorcraft.

NOTE: Of interest is that § 29.903(c), engine isolation for normal category airplanes, also excludes the fuel tank from consideration if only one tank is used.

(3) Consideration of fuel tank leakage under § 29.903(b) has dictated separate fuel tanks for Category A rotorcraft, but the regulation leaves the door open for unique designs by the expression, “Unless other provisions are made…,” in § 29.953(a)(2). Separate tanks are intended for Category A as evidenced by the identical fuel system independence requirements for multiengine Category B rotorcraft, except that separate tanks are specifically not required.

(4) A common supply tank, with individual “collector” tanks for each engine for Category A rotorcraft, has been allowed under § 29.953 provided that the capacity of the collector tanks will allow 20 minutes of maximum allowable en route OEI power.

(5) The fuel system independence regulations are not intended to preclude single-point fueling designs.

(i) For multiengine Category B rotorcraft, the assessment of an independent fuel supply system for each engine would begin at the fuel supply pickup point within the tank and continue to the engine fuel inlet at the engine.

(ii) For Category A rotorcraft, the assessment would begin with the tanks and continue to the engine fuel inlet.

(6) If supply line crossfeed capability is included as a feature, care must be exercised to ensure that the opening of the crossfeed does not jeopardize the continued safe operation of more than one engine. For example, if the crossfeed valve is automatically operated by a low pressure signal in the supply line for one engine, the possibility that fuel line leakage could cause opening of the crossfeed and jeopardize the continued safe operation of both engines should be considered. Similarly, opening the crossfeed valve with a suction lift system following engine or system malfunction should not allow air into the fuel supply line of the remaining engine.

(7) The independent fuel supply system requirement for each engine is for normal fuel system operations. Care should be exercised to ensure that flight manual procedures do not authorize normal usage of fuel system configurations which may violate the engine isolation principle. For example, routine fuel balance procedures should not allow usage of a common supply line if a failure can jeopardize the continued safe operation of more than one engine.

(8) Fuel system designs which allow the continued safe operation of all engines under expected fuel system component failure conditions (for example, a failed boost pump) by using common fuel flow paths under failure conditions are not prohibited.

(9) For APU's which perform a required in-flight function, a separate, independent fuel system complying with the corresponding engine fuel system rules should be provided. Other APU's (which do not perform a required in-flight function) may be supplied with fuel from a tee connection to a main engine fuel supply. The fuel shutoff valve for the APU should be located as close as possible to the APU system's connection to the main engine fuel system and a checkvalve should be included in the APU fuel system to prevent reverse-flow if negative pressure exists momentarily in the main engine fuel system. Maximum fuel demand of the APU will not jeopardize compliance with § 29.955.

AC 29.954. <u>§ 29.954 (Amendment 29-26) FUEL SYSTEM LIGHTNING PROTECTION</u>.

a. <u>Background</u>. During the initial development and promulgation of the standards concerning the airworthiness of rotorcraft, it was not deemed necessary to specify design features that would protect the rotorcraft from the meteorological phenomenon of lightning. This was due, in part, to the fact that rotorcraft were primarily operated in a VFR and non-icing environment. Also, a prudent pilot avoided thunderstorms where the possibility of encountering severe weather and a lightning strike was much greater. The construction, design, and operating environment of civil rotorcraft have changed markedly within the past two decades. Many rotorcraft are now authorized to fly IFR in all types of weather environment. One transport design has been approved for flight

into known icing conditions. Additionally, many rotorcraft now use the same advanced technologies in structures and systems as do airplanes. Because of these facts the possibility of a lightning strike encounter to the rotorcraft has been greatly increased. If the fuel system of the rotorcraft has not been properly designed and constructed, a fuel vapor ignition may occur. This occurrence generally results in a catastrophe to the rotorcraft. To prevent such a catastrophe and provide a level of safety equivalent to transport category airplanes, a specific rule for the lightning protection of transport category rotorcraft fuel systems was adopted in Amendment 29–26.

b. Explanation.

(1) This regulation requires that the rotorcraft's fuel system be designed and constructed so that an ignition of fuel vapor will not occur when the rotorcraft is involved in a lightning strike. For the purposes of this regulation the fuel system is comprised of the fuel tank with all its associated plumbing and any other areas of the rotorcraft likely to have fuel vapor present (such as sumps and drains for the tank itself). Externally mounted fuel tanks are also considered to be part of the "fuel system."

(2) Other associated installations such as electrical wiring in the fuel tanks which could provide a source of ignition due to an indirect or induced effect should also be considered.

c. Procedures.

(1) The current revision of Advisory Circular 20-53 provides guidance on an acceptable method and procedure to be utilized to demonstrate that the design and construction of the fuel system is compliant with § 29.954.

(2) FAA Report No. DOT/FAA/CT-89/22 contains additional information regarding the lightning environment. Also contained in this report are design and test techniques which provide for a design that will be adequately protected from fuel vapor ignition when the rotorcraft encounters the lightning environment. This report is available to the public by order from the National Technical Information Service, Springfield, VA 22161.

AC 29.955. § 29.955 (Amendment 29-2) FUEL FLOW.

a. Explanation.

(1) Section 29.955 is intended to ensure adequate fuel flow to the engine(s) at maximum power under the intended aircraft operating conditions and maneuvers. In ensuring adequate fuel flow, both hot and cold fuel would normally be evaluated for the suction lift system, whereas cold fuel is usually more critical for the boosted pressure system.

(2) In showing adequate fuel flow, the rule provides that--

(i) The fuel be supplied within the appropriate engine fuel pressure range;

(ii) The test be conducted with minimum fuel onboard, consistent with test safety;

(iii) For pump systems, fuel flow requirements be satisfied with the critical airframe furnished pump inoperative; and

(iv) The fuel flowmeter, if installed, must be blocked such that fuel must flow through the meter or its bypass.

(3) Section 29.955(b) specifies that if an engine can be supplied with fuel from more than one tank, the fuel system must feed promptly when fuel becomes low in one tank and another tank is selected.

b. Procedures.

(1) Testing (including bench tests) has been the accepted method to show compliance with § 29.955(a). Analytical techniques may be used to adjust the system test results to various fuel conditions and flows or to account for minor modifications to a system. A purely analytical approach is not generally acceptable.

(i) Methods to adjust the test data for different fuel properties and flows should be verified by limited testing.

(ii) If a suction lift system is used and hot fuel verification is involved (reference § 29.961) testing is appropriate.

(2) Demonstrating that the system is capable of providing "…100 percent of the fuel flow required under the intended operating conditions…" will depend on the particular system design, whether boosted or suction lift, Category A or Category B, and whether single or multiengine. Some of the factors to be evaluated are as follows:

(i) Acceleration fuel flow requirements may exceed those for steady-state operation. For example, if on a cold day, engine torque is the limiting parameter, the steady-state fuel flow demand corresponding to that torque may be exceeded during engine acceleration to that power.

(ii) For single-engine rotorcraft and for multiengine rotorcraft with all engines operating, some margin should be included to account for possible inadvertent overtorque.

NOTE: Notice of Proposed Rulemaking (NPRM) No. 84-19 proposes to include this consideration as a firm requirement (reference 49 FR 46670; dated November 27, 1984).

(iii) For multiengine rotorcraft, adequate fuel flow under OEI conditions should be ensured.

(A) For Category A systems, evaluation of § 29.903(b) should ensure that following the failure of one engine, lack of fuel flow will not jeopardize the safe operation of the remaining engine(s). Since governor-controlled engines will automatically accelerate to some limit if power demand is high, and since immediate crew action is not presumed under § 29.903(b), compliance with § 29.955 would include adequate fuel flow to the cold day maximum OEI torque to be expected (reference § 29.927(b)(2)).

(B) A proposed revision to § 29.955 (reference NPRM No. 84-19) would require that fuel flow for multiengine Category B rotorcraft be adequate for the § 29.927(b)(2) OEI overtorque condition.

(C) Following an engine failure, the remaining engine(s) may accelerate to the gas producer speed topping limit fuel flow, rather than to the fuel flow for the steady-state OEI power value. This consideration would be most important for suction lift systems which may be critical with hot fuel at altitude.

(3) The critical fuel system configuration should be evaluated.

(i) For pump fed (boosted) systems, fuel flow requirements should be satisfied with the critical airframe furnished pump inoperative.

(ii) If on multiengine rotorcraft it is acceptable to operate following an engine failure in more than one fuel system configuration (for example, if crossfeed is an acceptable mode), then the supplying of multiple engines through common components may be more critical than the OEI condition.

(4) Adverse transient and steady-state maneuver loads should be considered since the g-loading experienced may tend to decrease the engine fuel inlet pressure below allowable limits.

(5) The fuel should be delivered to the engine inlet within the limits specified in the engine type certificate. The method of specifying these fuel inlet pressure requirements varies with the engine model. Some of these include:

(i) Specification of a gage pressure as a function of altitude for suction system operation. The particular fuel and fuel temperature for demonstrating the criteria may be specified in the engine documents. Other approved fuels, fuel

temperatures, and boost-pump-on operation are considered satisfactory if the demonstration with the specified fuel is successful.

(ii) Specification of a maximum allowable vapor-to-liquid ratio for hot fuel, and minimum absolute pressure as a function of altitude for cold fuels.

(iii) Specification of a fuel inlet pressure relative to the true vapor pressure of the fuel, in combination with a maximum allowable vapor-to-liquid ratio.

(iv) Specification of separate pressure limits for boost-on and suction lift operation.

(v) Specification of special limits for emergency use or emergency fuels.

(6) For those systems which specify a minimum V/L ratio, the methods provided in Aerospace Recommended Practice (ARP) 492 published by the Society of Automotive Engineers are acceptable in evaluating test results.

(7) Since the lower quantity of fuel in the tank will reduce the hydrostatic head and thus the fuel inlet pressure, § 29.955(a)(2) specifies that the quantity of fuel in the tank should be minimum.

(8) Section 29.955(a)(3) specifies that each main and emergency pump be evaluated. If it can be determined which pump and flow path is critical, only that configuration would be tested. Similarly, for suction fuel systems, the critical flow paths and flow requirements should be evaluated. If pumps are required to supply the necessary fuel, § 29.1305 would require a fuel pressure indicator and § 29.1549 would require a red radial at the minimum safe operating fuel pressure for any fuel or fuel usage condition. This pressure limit should be used to determine compliance with § 29.955(a)(1) for all operations.

(9) Section 29.955(a)(4) specifies that the fuel flowmeter, if installed, be “blocked” in showing compliance with the fuel flow requirements. Consideration of flowmeter component failure or malfunction would most often be more appropriate than blockage.

(i) If the flowmeter is completely blocked in assessing compliance, then a bypass would be dictated, and the provision for “flow through the meter” following blockage would not be a viable alternative. It is not the intent of the rule to arbitrarily preclude flowmeter installations without a bypass system.

(ii) Section 29.1337(c) clarifies that if the <u>malfunction</u> of a metering component severely restricts fuel flow, a bypass would be required. An example of a malfunction to be considered would be a locked rotor on a rotating element design.

(iii) NPRM No. 84-19 proposes to clarify the intent of § 29.955 by requiring that proper fuel flow be ensured with fuel flow transmitter component failure, rather than with transmitter blockage as specified in the existing rule.

(10) Section 29.955(b) requires the fuel system to feed promptly when fuel becomes low in one tank and another tank is selected. This requirement is important because momentary fuel flow interruption must be expected to result in complete power failure and, for single engine rotorcraft, an emergency landing.

AC 29.955A. § 29.955 (Amendment 29-26) FUEL FLOW.

a. Explanation. Amendment 29-26 adds new requirements for test conditions to ensure that adequate fuel flow is available to the engine in critical combinations of adverse conditions that may be expected during operation of the rotorcraft. The amendment also requires a correlation between fuel filter blockage and the fuel filter warning device required by § 29.1305(a)(17). Design and performance standards for auxiliary fuel tank and transfer tank fuel systems are provided. These changes were made to ensure that all parameters associated with fuel supply to the engine are adequately addressed.

b. Procedures.

(1) Section 29.955 is intended to ensure adequate fuel flow to the engine(s) during all operating conditions of the rotorcraft. This includes the fuel flows necessary to operate the engine(s) under the test conditions required by § 29.927. Testing (including bench or rig tests) has been the accepted method of showing compliance with this section although analytical techniques may be used to adjust system test results to various fuel flow conditions or to account for minor modifications to a system. Analytical methods that are used to adjust the test results should be verified with limited testing. It should be shown during compliance testing that the fuel pressure, at the engine to airframe interface, will be within the limits specified by the engine manufacturer. The fuel pressure at this point should be maintained within limits specified by the engine manufacturer during all critical maneuvers and accelerations. All of the following conditions should be met during compliance testing unless it can be shown that combinations of the conditions are not possible.

(i) The fuel quantity in the tank(s) in use during the test may not exceed the unusable fuel quantity established under § 29.959, plus the minimum quantity required to conduct the test.

(ii) During the compliance test, the rotorcraft should be maneuvered to create the most critical fuel pressure head between the fuel tank outlet and the engine to airframe interface (engine fuel inlet).

(iii) For boost pump fed systems, it should be determined which pump (primary or secondary) would create the most critical restriction if it failed. The critical

pump should then be installed to create the critical restriction, either by actual or simulated failure.

(iv) Various combinations of engine power demand, electrical power available, and motive flow requirements for ejector pumps, will have an effect upon the fuel flow and pressure available at the engine to airframe interface. Adequate fuel pressure should be available to the engine with the most critical combination of these parameters.

(v) Critical values of fuel properties that may adversely affect fuel flow and/or fuel pressure should be applied. This includes alternate types of fuel if certification with alternate fuels is requested. At the minimum, the fuel that will create the highest vapor to liquid ratio should be used during hot fuel tests (§ 29.961). The most viscous fuel should be used during cold fuel tests.

(vi) The fuel filter, required by § 29.997, should be partially blocked to simulate the maximum contamination allowable. The blockage should be sufficient to activate the impending bypass indicator that is required by § 29.1305(a)(17).

(2) Unique Conditions. The phrase, "…Provide the engine with at least 100 percent of the fuel required under all operating and maneuvering conditions…" (§ 29.955(a)), includes unique flight conditions within the operational envelope of the rotorcraft. Critical conditions of fuel flow to the engine(s) may exist under the following conditions (and others identified by the applicant); therefore, they should be evaluated and tested if applicable:

(i) In a single engine rotorcraft, a rapid acceleration to maximum power (torque) that will be requested for certification may be a critical condition. In this case the fuel flow required during the transient may exceed the fuel flow required for steady state at the maximum power condition.

(ii) In multiengine rotorcraft, a rapid acceleration to the maximum OEI power rating that will be requested may be a critical condition. The fuel flow during the transient may be higher than that required at the steady state OEI condition.

(3) If auxiliary fuel pumps (boost pumps) are used to supply fuel to the engines, and ejector pumps are used for cross-feed or other inter-tank fuel distribution systems, a test should be run that will place the maximum fuel demand on the auxiliary pump(s).

(4) In some multiengine rotorcraft, a single pump may be required to provide fuel flow to all engines in the event of an auxiliary pump failure. If this is the case, a test should be conducted with a simulated (or actual) failed auxiliary pump. If the functional auxiliary pump is designed to provide motive flow for cross-feed systems, the most critical condition of fuel flow demand should be tested.

(5) Transient and steady state maneuver loads (g-loading) may affect the fuel pressure at the engine to airframe interface. This effect should be considered and then tested, if appropriate.

(6) The methods of specifying the engine inlet fuel pressure requirements are sometimes related to fuel temperature and altitude. Therefore, it is necessary to explore the extremes of the envelope to assure compliance rather than attempting to select one critical condition. For instance, the increase in fuel viscosity at cold temperatures may increase system pressure drop and offset a slight drop in required fuel flow. In this case, critical fuel inlet conditions may not be experienced at maximum engine fuel flow.

(7) A conservative demonstration would consider the maximum allowable fuel viscosity in combination with the maximum fuel flow. Otherwise, several test points may be required.

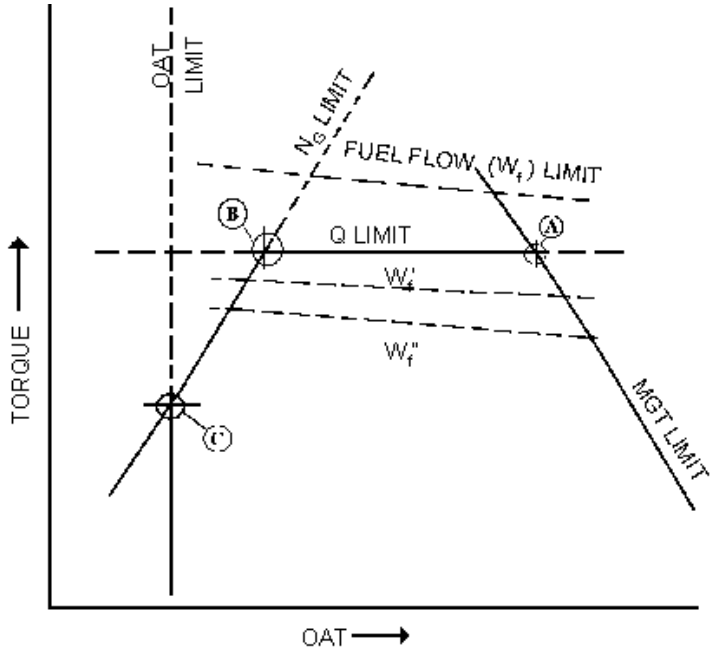

FIGURE AC 29.955A-1 FUEL FLOW

NOTES:

(1) Point A on figure AC 29.955A-1 is the highest fuel flow within aircraft limitations, but the system pressure drop is not expected to be maximum because of the low kinematic fuel viscosity.

(2) Point B is the maximum flow at cold temperatures but as the fuel temperature is further reduced, the fuel viscosity increases very rapidly.

(3) Point C represents the maximum viscosity of the fuel, but the fuel flow is somewhat reduced from point B. The maximum system pressure drops and, therefore, minimum fuel inlet pressure may occur between points B and C depending on the specific relationship of fuel viscosity to required fuel flow.

AC 29.957. § 29.957 FLOW BETWEEN INTERCONNECTED TANKS.

a. Section 29.957(a):

(1) Explanation. This paragraph sets forth a design requirement that prohibits approval of a fuel tank interconnect arrangement wherein gravity or acceleration-induced flow between tanks will result in overflow through a tank vent.

(2) Procedures. The design of the vent for the receiving tank should be sufficiently elevated to preclude gravity or flight accelerations from causing overflow through the vent. A flight test may be needed to determine the effectiveness of the arrangement. Check valves in the vent system to prevent overflow should be discouraged because of reliability aspects.

b. Section 29.957(b):

(1) Explanation. For fuel system arrangements which permit fuel to be pumped from one tank to another, design precautions to prevent structural damage to the receiving tank in the event of overfilling are required as well as a design means to warn the crew before overflow through the vents occurs.

(2) Procedures. The design of the receiving tank should have large vent lines or a recirculation line back to the original tank to prevent overfilling of the receiving tank. Alternatively, a float switch may be used to de-energize the transfer pump, providing that faults in the system do not adversely affect safety. A float switch may be used to warn the crew that overfilling of the receiving tank is impending. If a float switch is used, review the system reliability requirements of § 29.901(c).

AC 29.959. § 29.959 UNUSABLE FUEL SUPPLY.

a. Explanation. This rule requires the applicant to establish a value for unusable fuel for each tank. This value for unusable fuel may be selected by the applicant to facilitate compliance with § 29.1337(b)(1) provided the amount is equal to or greater than the actual unusable fuel. The actual unusable fuel is the amount of fuel in the tank when, in the critical flight attitude, evidence of system or engine malfunction occurs, or in the case of transfer tanks, when flow to the receiving tank is interrupted.

b. Procedures.

(1) The unusable fuel for each tank can be determined by flight tests which involve flight in the critical attitude or maneuver until indication of a malfunction. For boosted systems, the “first evidence of malfunction” may be a pressure fluctuation to below the fuel pressure minimum redline, engine power fluctuation, or boost pump failure warning indication. For suction lift systems, the indication may be a low fuel pressure warning light. In some instances, particularly for suction-lift systems, special test instrumentation for fuel pressure is required, and, since an accurate measurement

of the remaining fuel in the tank should be obtained, a method to close off flow from that tank would be needed. For transfer tanks, or tanks which are limited to use only during cruise flight, the flight regimes usually can be limited to level flight or hover at the c.g. condition which, by inspection, would create the maximum unusable fuel. For tanks for general use, the flight regimes should also include takeoff and landing using steady pitch attitudes to be expected, as well as hover and level flight conditions. The possible adverse effects of extreme lateral c.g. should be considered.

(2) Normally, these tests are conducted with all equipment (pumps, ejectors, etc.) operating as prescribed by the design. However, values for unusable fuel with pump failures, if significantly different, should also be determined and listed in the flight manual. These values for unusable fuel need not be considered in the empty weight of the aircraft.

c. While the procedures of paragraph b(1) are acceptable, fuel exhaustion during critical flight test conditions must be expected. To minimize this possible flight test hazard, the applicant may in many cases, utilize analysis and/or ground tests involving normally available flight test data on aircraft attitudes, tank configuration studies, and critical flight condition studies to determine unusable fuel. Any questionable results, however, should be resolved by actual flight test or introduction of conservatism into the finding.

AC 29.961. § 29.961 FUEL SYSTEM HOT WEATHER OPERATION.

a. Explanation.

(1) Section 29.961 specifies that a hot fuel test be conducted on suction lift systems, and on other fuel systems conducive to vapor formation, to ensure that the system is free from vapor lock at a fuel temperature of 110° F under critical operating conditions.

(2) Pressure boosted systems would not ordinarily require hot fuel tests unless--

(i) There are high points in the fuel system which would allow accumulation of vapor; or

(ii) The engine fuel inlet pressure is negative relative to tank pressure because of low boost pump pressure or high fuel system pressure losses (but still within fuel pressure limits).

(iii) The airframe boost pump is not actually submerged such that a portion of the system is suction lift.

(3) Boosted system vapor lock difficulties, at relatively low system flows compared to pump capacity, have occurred in at least two instances.

(i) If the fuel pump is a positive displacement type with an internal bypass and the pump capacity significantly exceeds system demand, excessive recirculation within the pump may significantly raise the local fuel temperature resulting in pump cavitation.

(ii) Parallel pump systems, where one supplies the majority of the fuel while the other “deadhead” pump supplies only a negligible amount of fuel, may experience vapor lock and cavitation of the deadhead pump due to excessive recirculation of fuel as described in a(3)(i).

(4) The requirement to use 110° F fuel is a carryover from the recodification of CAR Part 6, although the use of hotter fuel at the same Reid Vapor Pressure would tend more toward vapor formation.

(5) The term “vapor lock” means a change in normal engine operation as a result of the formation of fuel vapor-air mixtures in the fuel feed system.

(6) Section 29.961(b) and (c) inappropriately specify a particular flight condition, weight, and power spectrum which may not be critical. Hence, a demonstration of compliance to the specifics of § 29.961(c) will probably be inadequate for compliance with § 29.961(a)(2). NPRM No. 84–19 proposes to revise § 29.961 to delete these unnecessary, detailed regulations with a simple requirement to show satisfactory operation under critical operating conditions with hot fuel. The guidance which follows should be sufficient to establish compliance with § 29.961, in total, without regard to the misleading specifics of § 29.961(b) and (c).

b. Procedures.

(1) The fuel type to be used should be that with the highest true vapor pressure (TVP) at the 110° F condition.

(2) The fuel should be heated as rapidly as possible since the longer fuel is heated the more vaporization occurs resulting in unconservative test results. Likewise, heating the fuel above the target temperature, then allowing it to cool will “weather” the fuel excessively resulting in a reduction in Reid Vapor Pressure and unconservative testing.

(3) If the test is performed at cool ambients, the fuel lines, tanks, etc., may have to be insulated to ensure that the fuel inlet temperature is approximately the same as would be experienced on a hot day. This should be verified by instrumenting the fuel temperature at the engine inlet.

(4) The fuel level should be the lowest consistent with test safety. The reference to full fuel tanks in § 29.961(c)(2) is misleading because:

(i) Section 29.955(a)(2) would require adequate fuel flow under low fuel level conditions.

(ii) The provision of § 29.961(a)(2) to verify satisfactory hot fuel operation "under critical operating conditions" would mean verification at maximum rate of climb and maximum fuel suction head. The maximum fuel suction head would occur with lowest fuel level.

(5) The flight tests to the service ceiling should include maximum power climbs to selected intermediate altitudes where various maneuvers including the following are performed:

(i) Low power descent with rapid transition to takeoff power.

(ii) Turns and cyclic pull-ups with load factors comparable to the flight strain survey.

(iii) For multiengine rotorcraft with 30-minute and/or 2.5-minute OEI power ratings, conduct a rapid single-engine acceleration from low power to engine topping power followed by cruise at 30 minute OEI power.

(6) The flight test maneuvers should be repeated at the service ceiling.

(7) Except for transients and descents, the power available used should correspond to a 100° F sea level day lapsed 3.6° F/1,000-foot pressure altitude.

(8) Engine operation throughout the test should be normal; i.e., no surge, stall, flameout, etc., and the engine fuel inlet requirements should not be violated.

(9) Alternative tests on appropriate test rigs may be conducted ensuring proper simulation of altitude, ambient temperature, fuel temperature, fuel flow, and load factors.

AC 29.961A. <u>§ 29.961 (Amendment 29-26) FUEL SYSTEM HOT WEATHER OPERATION</u>.

a. <u>Explanation</u>. Amendment 29-26 simplifies and restates the fuel system hot weather certification requirements. This eliminates detail requirements in the existing rule which were, to some extent, redundant, or not necessarily critical for some rotorcraft. The phrase, "including, if applicable, the engine operating conditions defined by §§ 29.927(b)(1) and (b)(2)," was added to ensure that certain critical certification aspects are properly considered.

b. <u>Procedures</u>. This paragraph specifies that all suction lift systems and any other fuel system that may be conducive to vapor formation, show satisfactory engine fuel inlet conditions (within criteria established by the engine manufacturer) when using

the fuel with the highest true vapor pressure (TVP) at 110° F fuel temperature. Engine operating conditions should include those defined by §§ 29.927(b)(1) and 29.927(b)(2). Compliance can be shown by analysis, testing, or a combination of both.

AC 29.963. § 29.963 FUEL TANKS: GENERAL.

a. Explanation. Section 29.963(a) sets forth general requirements for fuel tank structural aspects. Paragraph (b) requires design features to react forces defined by § 29.561 without leaking fuel. Paragraph (c) requires that whenever flexible fuel tank liners are used, they must be FAA/AUTHORITY approved. Paragraph (d) requires that integral fuel tank interiors be inspectable and repairable.

b. Procedures.

(1) For compliance with § 29.963(a), the tests of § 29.965 are normally adequate if performed in conjunction with the reliability test of § 21.35 or other simulation tests.

(2) For compliance with § 29.963 (b), a structural analysis is usually required to show adequate strength under the loads of § 29.561. Testing, if proposed, may also be an acceptable method of compliance.

(3) For compliance with § 29.963(c), prior FAA/AUTHORITY approvals should be reviewed to ensure compatibility with current project requirements. Also, if a new approval is required as part of the project, then analysis and/or tests should be conducted as appropriate to ensure compliance.

(4) For compliance with § 29.963(d), a review of the design data and/or a visual inspection of any prototype available for inspectability and repairability considerations is usually sufficient to determine compliance. Features such as inspection ports and access panels are typical methods of compliance.

AC 29.963A. § 29.963 (Amendment 29-26) FUEL TANKS: GENERAL.

a. Explanation. Amendment 29-26 adds § 29.963(e) that requires designs and tests to ensure that no exposed surface inside a fuel tank would, under normal or malfunction conditions, constitute an ignition source. It also sets forth standards for the design and qualification of fuel tanks located in personnel compartments. These requirements are needed to ensure freedom from the hazards of fuel tank internal explosions and to ensure that fuel tanks installed in passenger compartments present no hazards to the personnel or to the rotorcraft.

b. Procedures. Section 29.963(e) requires the temperature of any exposed surface inside a fuel tank to be at least 50° F lower than the lowest auto-ignition temperature of the fuel or fuel vapors in the tank (reference paragraph AC 29.1185b(3), § 29.1185). For compliance with § 29.963(e), the internal component surface

temperatures can be determined by flight or laboratory tests. The most critical flight conditions are established with sensitive temperature and pressure measuring equipment. This equipment is installed inside the tanks and in the ventilation air spaces.

AC 29.963B. § 29.963 (Amendment 29-35) FUEL TANKS: GENERAL.

a. Explanation. Amendment 29-35 adds a new paragraph (b) that includes the requirements previously contained in paragraph (c) that each flexible fuel tank bladder or liner be either FAA/AUTHORITY approved or be suitable for each particular installation. In addition, the new paragraph (b) adds the requirement that the fuel tank bladder or liner be puncture resistant by meeting the TSO C80, paragraph 16.0, screwdriver test requirements, using a new crash resistance based minimum puncture force of 370 lbs. The requirements previously contained in paragraph (b) are replaced by the crash resistant fuel system requirements of § 29.952 (including load factors). A new paragraph (e) is also added. Paragraph (e) requires that each fuel tank installed in a personnel compartment be isolated by fume-proof and fuel-proof enclosures that are drained and vented to the exterior of the rotorcraft. Further, the design and construction of the enclosures must provide the necessary protection for the tank, must be crash resistant by meeting the applicable criteria of the new Crash Resistant Fuel System requirements of § 29.952, and must be adequate to withstand the loads and abrasions to be expected in personnel compartments.

b. Procedures.

(1) Paragraph (b). The procedures for paragraph (c) prior to Amendment 29-35 still apply to new paragraph (b). In addition, to comply with the added puncture resistance requirement under new paragraph (b), the requirements of § 29.952(g) must be met. Paragraph AC 29.952 gives the detailed compliance procedures for § 29.952(g). The compliance procedures for § 29.952(g) also provide compliance for puncture resistance under § 29.963(b).

(2) Paragraph (e). Compliance with paragraph (e) can be shown by conducting a thorough design review of each fuel tank and its enclosure that is installed in a personnel compartment to ensure the regulatory criteria are met. (All fuel drains and vents should also be reviewed to ensure that they meet applicable § 29.952 requirements.) A basic static loads analysis followed by a stress analysis is typically used to determine that the enclosure protects the fuel tank and provides the crash resistance level necessary for occupant survival in an otherwise survivable impact. The applicable emergency load factors are typically used to design the enclosure. (Section 29.952 contains the corresponding load factors for fuel cells and their attachments.) The emergency load factors are typically adequate for all loading conditions encountered by the enclosure in service. The typical design approach is to design the enclosure to crush at a rate approximately the same as the crush rate of the fuel tank and to ensure that all puncture hazards (such as sharp projections either enhanced or created by impact that would penetrate the fuel tank) are minimized in

design. (See paragraph AC 29.952 guidance material for details.) The design of the enclosure should also be reviewed for overall durability and resistance to all reasonable occupant abuses that could cause a hazard to the integrity of the enclosure, the fuel tank, its vents and its drains.

AC 29.965. § 29.965 (Amendment 29-13) FUEL TANK TESTS.

a. Explanation.

(1) This section prescribes the fuel tank structural tests to be accomplished without failure or leakage.

(2) Section 29.965(b) prescribes pressure testing for conventional metal tanks, integral tanks, and for nonmetallic tanks with walls that are not supported by the rotorcraft structure.

(3) Section 29.965(c) prescribes pressure testing for nonmetallic tanks with walls supported by the rotorcraft structure.

(4) Section 29.965(d) prescribes slosh and vibration testing for tanks with large unsupported or unstiffened flat areas.

b. Pressure Tests.

(1) Each conventional metal tank, integral tank, and each nonmetallic tank without supporting rotorcraft structure should be subjected to pressures of at least 3.5 PSI gage.

(i) If the pressures developed during maximum limit acceleration or emergency deceleration with a full tank exceeds the 3.5 PSI value, a hydrostatic pressure test (or equivalent) should be used to duplicate these acceleration loads as far as possible.

(ii) Pressures need not exceed 3.5 PSI on surfaces not exposed to the acceleration loading.

(iii) Section 29.337 gives the value for the maximum limit acceleration.

(2) Section 29.965(c) applies to nonmetallic tanks with walls supported by the rotorcraft structure. Section 29.965(c)(1) does not require that the tank alone be capable of withstanding 2.0 PSI. Rather, the tank may be mounted in the supporting structure and subjected to the testing of § 29.965(c)(2).

(3) Pressure tests may be conducted by slowly applying a controlled, gauged air source to the tank with sealed vents and fluid entrances and exits. The air pressure

source should then be positively sealed and the tank should retain the prescribed pressure.

(4) Tank and surrounding structure should be carefully examined during and after pressure testing to ensure that there is no damage.

(5) If the prescribed 3.5 PSI or 2.0 PSI, depending on the type of tank, will be exceeded on some surfaces during maximum limit acceleration loading, hydrostatic testing may be preferred. High density fluids have been used to apply the acceleration loads to lower surfaces with supplemental air pressure used above the liquid surface to provide the appropriate pressure on upper surfaces.

(6) For fuel tanks in those areas designated by § 29.967(f), the pressure tests may be designed such that compliance with that paragraph also demonstrates compliance with § 29.965 pressure test requirements.

(c) Slosh and Vibration Tests.

(1) The test requirements of § 29.965(d) are very specific and require little explanation.

(2) There is not an absolute value of what constitutes “large” unsupported or unstiffened flat areas. However, it has generally been considered that any fuel tank with less than a 10-gallon capacity, constructed with a simple, wide, flat geometric shape and using metal (in metal tanks) of 0.05-inch thickness or greater would not require tests in accordance with § 29.965(d). Using this basis, a 14- by 14- inch properly constructed tank would not require vibration and slosh tests.

(3) If the tank construction is of a metal or integral design which can be shown to be similar to previously approved tanks with acceptable service history, the vibration and slosh tests may not be required. Similarity would entail comparing the construction technique; i.e., similar panel size, similar sealing methods, skin and angle thickness, similar loads, etc.

(4) For fuel tanks located in a sponson or stub wing, the entire sponson or wing should be rocked and vibrated unless it can be determined that a certain portion of the tanks is critical. In this case a fixture should be developed such that the portion of the tank being tested is rocked about a pivot point which would produce the same amplitudes of motion for the portion of the tank being tested, as if the whole sponson or wing was being tested. Structural loads in conjunction with these tests have not been required.

(5) The amplitude of vibration specified in the regulation is double amplitude (peak-to-peak). Vibration amplitudes less than one thirty-second of an inch should be justified by instrumented tests of the tank installed in the aircraft.

(6) The vibration and slosh procedures listed in Military Specification MIL-T-6396 have been accepted to show compliance with § 29.965(d).

(7) After all tests have been conducted, the tanks should be leak checked using test fluid conforming to Federal Specification TT-S-735 type III or equivalent.

AC 29.967. § 29.967 FUEL TANK INSTALLATION.

a. Section 29.967(a):

(1) Explanation. This paragraph sets forth a series of detail requirements for fuel tanks intended to ensure that tank leakage or failure is unlikely. These requirements pertain primarily to proper support of the tank and protection against chafing.

(2) Procedures. For conventional metal tanks, the support devices, commonly called “cradles,” should be designed with wide flanges or cap strips at the contact area with the tank to distribute the loads in the tank material. To prevent chafing, install nonmetallic padding, treated to eliminate absorption of fuel between the tank and the support structure. Cork strips sealed with shellac and bonded to the support structure have been found suitable. Fuel cell sealant material should be applied over rivet heads and in corners. Bladder cells must be designed to fit accurately in the cell cavity in order to avoid fluid loads in the bladder itself. The interior of the cavity should be smooth to avoid damage to the bladder cells.

b. Section 29.967(b):

(1) Explanation. This paragraph requires the design to provide ventilation and drainage of spaces adjacent to fuel tanks to avoid accumulation of fuel or fumes to be expected from minor leakage of fuel tanks. This is needed to minimize the possibility of fire or explosion in these spaces. An exception to this requirement is allowed for bladder cells installed in a closed compartment. For this configuration, ventilation may be limited to that provided by compartment drains if the ventilation is adequate to maintain proper pressure relationship between the bladder cell and cell compartment air spaces.

(2) Procedures. With the assumption that fuel tank leakage will occur, require the tank compartments to be provided with drains at any low point. These drains should conduct fuel clear of the rotorcraft and should be three-eighths of an inch or larger in diameter to minimize clogging. As with any drain intended to function in flight, verification that reverse flow will not occur due to pressure differentials at each end of the drain is appropriate. Ventilation for these tanks should involve openings in the compartment walls such that in-flight slipstream and/or rotor downwash will rapidly and continuously purge the tank compartment of fuel fumes. Openings should not be located so the fumes or fuel can reenter the rotorcraft. For flexible tank liner configurations (bladder cells), no specific ventilation is required if the cell is located in a

compartment which is closed, except for drain holes. Note that a cell leak may be expected to produce fumes in the compartment airspace which are flammable; thus, items installed in bladder tank cavities shall not create a hazard during either normal or malfunction conditions. The vent system for the interior of the cell must be adequate to ensure that the bladder cell interior pressure is always positive or at least neutral with respect to any other airspace in the cell compartment to prevent collapse of the bladder cell. Drainage of the cell compartment should meet the criteria discussed above.

(3) A light mesh or string network hung between the bladder cell and its compartment walls is recommended to provide seepage channels to facilitate fuel leakage to the low-point compartment drains.

c. Section 29.967(c):

(1) Explanation. This paragraph requires a measure of protection for fuel tanks from adverse effects of a fire in a fire zone.

(2) Procedures. Verify that a firewall meeting the requirements of § 29.1191(e) effectively separates any fuel tank from any engine. To minimize hazards of heat transfer to a fuel tank through a firewall during an engine compartment fire, verify that at least one-half inch of clear airspace exists between the tank and the firewall.

d. Section 29.967(d):

(1) Explanation. This paragraph is intended to prevent hazards to integral fuel tanks to be expected by impingement of flames or products of combustion from an engine compartment fire.

(2) Procedures. Review the design for relative positions of engine compartments and integral fuel tanks to estimate the flowpath of fire or heat from an engine compartment fire. Consider autorotation for single-engine rotorcraft and, for multiengine rotorcraft, low power descent as power-on flight in this evaluation. If questionable compliance exists, clear indication of the flow impingement patterns may be identified by ejecting a dye from engine compartment openings during flight.

e. Section 29.967(e):

(1) Explanation. This paragraph is primarily intended to provide a standard for installing fuel tanks in personnel compartments. The primary safety concern is to isolate fuel or fumes from personnel in event of a leak in the tank.

(2) Procedures. Assume a leak in the tank and determine that, through the use of additional walls, bulkheads, enclosures, etc., that fuel and fumes will be safely drained and/or purged to the exterior of the rotorcraft. Note that, in order to perform their intended function, the enclosure material and structure should withstand the

mechanical stresses and abrasions to be expected from crew and passenger activities within the compartment.

f. Section 29.967(f):

(1) Explanation. This paragraph is intended to require the design to prevent fuel tank or tank support failure when exposed to the minor crash loads of § 29.561 if such failure could result in fuel entering personnel compartments or fire hazard areas.

(2) Procedures. If a review of the design indicates that tanks are in or adjacent to passenger compartments, or are adjacent to combustion heaters or engines (including APU's), further evaluation of the structural integrity of the tank and its support features must be accomplished. Normally, this involves a quantitative analysis of the tank support structure to confirm that it can sustain the minor crash loads plus one or more pressure tests to simulate the fluid loads on the tank interior to be expected when the minor crash loads are applied. This latter requirement may be, in many cases, satisfied by the qualification requirements of §§ 29.963 and 29.965. Pressure tests tend to overstress upper surfaces of a tank in order to achieve the required stress in the lower surfaces. To minimize this, some applicants have filled the tank to be tested with high density fluids and applied only supplemental pressure to the airspace at the top of the tank. High density fluids are available from the petroleum industry.

AC 29.967A. § 29.967 (Amendment 29-35) FUEL TANK INSTALLATION.

a. Explanation. Amendment 29-35 removes paragraph (e) from § 29.967 and places the identical criteria in a new paragraph (e) to § 29.963. This was done to make §§ 29.963 and 29.967 parallel with §§ 27.963 and 27.967.

b. Procedures. The procedures specified in paragraph AC 29.967, subsection (e) now apply under paragraph AC 29.963B. Thus there is no change in the certification requirements or the compliance methodology, only a change in their location in the FARs and Advisory Material, respectively.

AC 29.969. § 29.969 FUEL TANK EXPANSION SPACE.

a. Explanation.

(1) Space must be provided in each fuel tank system to allow for expansion of the fuel as a result of a fuel temperature increase. The space provided for this purpose must have a minimum volume equal to 2 percent of the tank capacity.

(2) The fuel tank filling provisions must be designed to prevent inadvertent filling of the fuel tank expansion space when fueling the rotorcraft in the normal ground attitude on level ground.

b. Procedures.

(1) Fuel tanks with interconnected vents need not have provisions for fuel expansion in each tank if equivalent expansion provisions are available in another area.

(2) The fuel filler ports should be located below the designated fuel expansion space height to assure that the fuel expansion space cannot be inadvertently filled with fuel. For pressure refueling systems, compliance with this section may be shown with the means provided to comply with § 29.979(b).

(3) Each fuel tank expansion space must comply with the venting requirements of § 29.975.

(4) For multiengine rotorcraft using a single expansion tank to satisfy the requirements of this regulation, the effect of blockage or failure of any vent from this common tank must be considered with respect to compliance with the applicable engine isolation requirements.

AC 29.969A. § 29.969 (Amendment 29-26) FUEL TANK EXPANSION SPACE.

a. Explanation. Amendment 29-26 was issued so that properly interconnected fuel tanks will not be required to have an expansion space for each tank if adequate expansion space is otherwise provided. This amendment eliminates unnecessary design requirements when simpler designs have been proven to be satisfactory.

b. Procedures. Methods of compliance are not changed with this amendment.

AC 29.971. § 29.971 (Amendment 29-12) FUEL TANK SUMP.

a. Explanation.

(1) Each fuel tank should be provided with a drainable sump which is located at the lowest point in the tank with the rotorcraft at ground attitude in order to allow drainage of possibly hazardous accumulations of water from the system.

(2) The minimum required sump capacity, 0.10 percent of the tank capacity or one-sixteenth of a gallon, whichever is greater, should be effective at any normal attitude and located such that the sump contents cannot escape from the tank outlet opening.

(i) Combined interconnected tanks can be treated as a single tank and utilize only one sump if that sump can be located to allow effective trapment and drainage of the potential combined water accumulation.

(ii) The requirement that sump contents not be allowed to escape through the tank outlet opening is intended to ensure that water, or other impurities which may precipitate from the fuel in the tank(s), does not enter the fuel feed system.

(3) Section 29.971(c) would ensure that the fuel tank design and installation allows drainage of hazardous quantities of water to the sump with the rotorcraft in the ground attitude.

(4) Section 29.971(d) would ensure that not only are possibly hazardous accumulations trapped, but also that they are drainable with the rotorcraft in the ground attitude.

(5) Proposed Amendments (Notice 84-19) to §§ 29.971(c) and 29.999(a) would require that the tank sumps be designed or arranged to collect water and be drainable in any ground attitude to be expected in service. This proposed provision would require consideration of the effectiveness of the sumps and drains at the sloped landing limits as well as at normal ground attitude.

b. Procedures.

(1) Demonstration of compliance with the minimum sump capacity requirements may be shown by analysis, test, or a combination of both depending on the complexity of the fuel system design.

(2) If minimum sump capacity is to be established by tests, the following procedure has been accepted.

(i) Fuel the aircraft tanks to ensure that all sumps are filled, that any transfer pumps are immersed, and that the fuel level is above the fuel feed pickup point in the tank(s).

(ii) Use the normal fuel feed provisions to remove fuel from the system. The fuel inlet line at the engine/airframe interface may be disconnected and the fuel pumped overboard. If an engine-supplied suction lift pump is the normal feed mechanism, a suction lift pump of approximately the same capability may be substituted to avoid operating the engine.

(iii) Determine the most critical ground attitude to be expected in service from such considerations as uneven terrain, slope landing limits, etc. The critical attitude for each tank will be that for which the maximum amount of fuel can be withdrawn from the tank using the rotorcraft's fuel supply system.

(iv) Using a rotorcraft with a fuel system which conforms to the final design specification, position the rotorcraft to the critical attitude for the tank to be tested using leveling jacks, actual terrain of a predetermined slope, or other similar means.

(v) Using the rotorcraft's fuel supply system, pump fuel from the tank being tested until the supply system will no longer withdraw fuel. This can be done

without the rotorcraft engine actually running unless an engine driven pump is an essential component of the fuel supply system. Caution should be exercised if an engine is to be run to fuel exhaustion since engine surge at the pump cavitation point can result in damaging torsional loads in the transmission drive system.

(vi) When no more fuel can be removed from the tank with the rotorcraft fuel supply system, return the rotorcraft to a normal ground attitude. Completely drain the sump of the tank or tanks being tested into a container and measure the volume drained from each sump. The volume measured must satisfy the minimum capacity requirements of paragraph AC 29.971(a)(2).

(3) If, in the above procedure, a known quantity of fuel is added to initially empty tanks and the total fuel removed (pumped overboard and drained) is recorded, the data may also be used to show compliance with §§ 29.971(d) and 29.999(a).

AC 29.971A. § 29.971 (Amendment 29-26) FUEL TANK SUMP.

a. Explanation. Amendment 29-26 requires that fuel tank sump designs be arranged so that drainage from the sump area will be effective with the rotorcraft parked in any allowable ground attitude in lieu of “normal” attitude as previously required.

b. Procedures. All of the policy material pertaining to this section remains in effect with the extra requirement that each fuel tank should be provided with a drainable sump which is located at the lowest point in the tank with the rotorcraft at “any” ground attitude in order to allow drainage of possibly hazardous accumulations of water from the system. This provision requires consideration of the effectiveness of the sumps and drains at the sloped landing limits as well as at normal ground attitude.

AC 29.973. § 29.973 FUEL TANK FILLER CONNECTION.

a. Explanation.

(1) Fuel tank filler connections must be designed so that no fuel can enter into any part of the rotorcraft other than the fuel tank during fueling operations. Spilled fuel must be considered as well as fuel entering the fuel filler port.

(2) A recessed filler connection that can retain appreciable quantities of fuel should have a drain that discharges clear of the rotorcraft.

(3) Section 29.1557(c)(1) prescribes the marking of the filler.

(4) The filler cap must be fuel-tight under the pressures expected in normal operation.

(5) For Category A rotorcraft, the filler cap or cover must warn if the cap is not fully locked or seated. An improperly locked and seated fuel cap should be evident on the preflight inspections.

(6) The parallel Part 23 and 25 requirements specify that, except for pressure refueling connection points, the filling point must have a provision for electrically bonding the aircraft to ground fueling equipment. Though not specifically required by Part 29, rotorcraft manufacturers have included this provision in recognition that the same potential hazard exists for possible discharge of sparks between the fuel dispensing nozzle and the aircraft as would exist for airplanes.

(7) A proposed rule (Notice 84-19) would add a fuel system lightning protection requirement for rotorcraft. The potential for fuel vapor ignition near the filler cap would be a primary concern. (NASA publication 1008, Lightning Protection of Aircraft, and the user's manual to AC 20–53A, Protection of Aircraft Fuel Systems Against Fuel Vapor Ignition Due to Lightning, provide further information.)

b. Procedures. Compliance with the requirements of this paragraph can normally be demonstrated by analysis and physical inspection of the fuel filler connection design. Testing is not normally required.

AC 29.973A. § 29.973 (Amendment 29-35) FUEL TANK FILLER CONNECTION.

a. Explanation.

(1) Amendment 29-35 revised the requirements for fuel tank filler connections. paragraph (a) is revised to require that all fuel tank filler connections be made crash resistant in accordance with the requirements of § 29.952(f) and its associated advisory material (reference paragraph AC 29.952).

(2) Paragraph (a)(3) is revised to require that all filler caps remain fuel tight under fuel pressures induced during a survivable impact.

(3) Paragraph (b) is revised to require that all transport category rotorcraft (not just Category A as currently required) have a filler cap cover or filler cap that warns when the cap is not fully locked or seated on the filler connection. This change ensures that a loose filler cap will not allow spilled fuel and cause a postcrash fire in an otherwise survivable accident.

b. Procedures.

(1) The compliance procedures for general paragraph (a) are those of § 29.952(f) and those described herein for the three subparagraphs to (a).

(2) The compliance procedures for (a)(1) and (a)(2) can normally be demonstrated by analysis and physical inspection of the fuel filler design. Testing is not normally required.

(3) The compliance procedures for (a)(3) are as follows: The fuel tank filler connection must be shown to be leak free under the worst case fuel pressures (due to combination of static pressure and sloshing induced head) from both normal operations and from a survivable impact. The worst case loads from these two conditions must be determined. In most cases the load resulting from a survivable impact will prevail. For the survivable impact, normally the worst case combined pressure loading occurs at the time of impact at the fuselage that places the filler tube neck (at the vicinity of the filler cap connection) in a vertical or near vertical attitude. Once the critical load case is determined by analysis, test, or a combination; the fuel tank filler connection (or an approved mockup) can be tested for sealing capability by applying a fluid such as water at the critical pressure at the critical attitude of the tube (with the cap inverted) for a period of at least 5 minutes. If no significant leakage occurs, then compliance has been shown. Significant leakage is defined as leakage in excess of 10 drops per minute at any time during or after the 5-minute test.

(4) Compliance procedures for paragraph (b) are as follows: Visual means, such as placards and alignment marks, and mechanical means, such as detents and locking slots, must both be provided. This is necessary to give both a clear visual and mechanical indication that a filler cap or a filler cap cover is properly installed and fuel tight after each removal and replacement. Visual indications such as alignment marks, that show proper installation should be easily read from a distance of at least 5 feet by anyone making a routine inspection or check.

AC 29.975. <u>§ 29.975 FUEL TANK VENTS AND CARBURETOR VAPOR VENTS</u>.

a. <u>Explanation</u>. This section sets forth design requirements that address siphoning of fuel, pressure differentials, moisture accumulation, fumes in personnel compartments, and carburetor vapor vents.

b. <u>Procedures</u>. The design of the vent for the fuel system should be adequate to preclude problems associated with this section. Analysis and/or flight testing may be required to demonstrate this adequacy depending upon the fuel system design. If flight testing is required, the following flight test procedure is one method of verifying proper vent system operation.

(1) Using a rotorcraft with a fuel tank and vent system which conforms to production design specifications, install differential pressure instrumentation to measure the difference between the gas pressure inside each fuel tank expansion space and the air pressure in the cavity or area surrounding the outside of the fuel tank.

(2) Conduct ground and flight tests, recording the differential pressures between the inside and the outside of the fuel tanks. The following conditions should be evaluated:

(i) Refueling and defueling (if applicable).

(ii) Level flight to V_{NE}.

(iii) Maximum rate of ascent and descent.

(3) Compare the measured differential pressure values with the maximum allowable for the fuel tank design being evaluated. For flexible, bladder-type fuel cells, the pressure inside the tank should not be significantly less than the surrounding pressure to avoid the possibility of collapsing the bladder.

AC 29.975A. § 29.975 (Amendment 29-26) FUEL TANK VENTS AND CARBURETOR VAPOR VENTS.

a. Explanation. Amendment 29-26 adds § 29.975(a)(7) which requires that fuel tank vent systems be designed to minimize fuel spillage and subsequent fire hazards in the event of rollover of the rotorcraft during landing or ground operations.

b. Procedures. All of the policy material pertaining to this section remains in effect with the added requirement that the fuel tank vent system design should minimize spillage of fuel in the vicinity of a potential ignition source in the event of rollover during landing or ground operation.

AC 29.975B. § 29.975 (Amendment 29-35) FUEL TANK VENTS AND CARBURETOR VAPOR VENTS.

a. Explanation. In addition to the current requirements, Amendment 29-35 revises paragraph (a)(7) to add the requirement that the venting system be designed to minimize fuel spillage through the vents to an ignition source in the event of a fully or partially inverted rotorcraft fuselage attitude following a survivable impact. (A survivable impact is defined in paragraph AC 29.952.) Since rotor action on impact and other impact dynamics have been found in numerous cases to cause rollovers or other unusual postcrash attitudes, compliance with this paragraph would significantly mitigate the postcrash fire hazard by minimizing fuel spills through vents to ignition sources when the postcrash attitude of the rotorcraft would allow gravity and/or post impact sloshing induced fuel spills through a normally open fuel vent.

b. Procedures.

(1) In addition to the compliance procedures for the previous amendment; installation of design features, such as gravity activated shuttle valves in the vent lines (that are normally open but close under certain predictable, postcrash scenarios that

are generated by involvement in a survivable impact that results in either an inverted or partially inverted fuselage attitude) must be accomplished.

(2) Once selected, the design feature chosen for compliance should be shown to function effectively without significant leakage by either full-scale and/or bench tests that apply the total pressure forces that correspond to a 100 percent full, 50 percent full, and 5 percent full fuel load applied to the device in a worst case survivable impact. (If a critical fuel level can be clearly identified, then only that fuel level and the corresponding critical total pressure load need be utilized for certification approval.) The total pressure forces should be determined and applied in a manner that simulates the magnitude and rate of load onset (due to a combination of gravity and sloshing) that would occur in otherwise survivable impacts that would involve rollover attitudes of 45 degrees (or the minimum spillage roll angle), 90 degrees (rotorcraft on its side), and 180 degrees (rotorcraft fully inverted). (In some designs, the 45-degree attitude may not be the correct initial roll angle at which fuel spillage through a given vent would begin to occur due to the placement of the vents on the fuselage. For these cases, the minimum angle should be determined by analysis.)

(3) Once all test conditions are defined, these tests should be conducted with all structural deformation present in the test set up that is necessary to simulate the actual structural deformation either in or applied to the vent line or system in a worst case survivable impact. The structural deformation to be applied can be determined by rational analysis, analysis, test, or a combination. Significant leakage is defined as leakage of 10 drops per minute, or less, after all testing is complete. The criteria of 10 drops per minute, or less, corresponds to the criteria of 5 drops per minute, or less, per breakaway coupling half (i.e., a total of 10 drops per minute, or less, for the entire separated coupling) specified in the advisory material for § 29.952 (reference paragraph AC 29.952).

AC 29.977. <u>§ 29.977 (Amendment 29-12) FUEL TANK OUTLET</u>.

a. <u>Explanation</u>.

(1) This section prescribes a fuel strainer for the fuel tank outlet (suction lift system) or for the booster pump (boosted systems) for both reciprocating and turbine engine installations.

(2) This requirement ensures that relatively large, loose objects which may be present in the fuel tank do not interfere with fuel system operation. The provisions of § 29.997 should ensure protection from smaller contaminants which may occur in service.

b. <u>Procedures</u>.

(1) Section 29.977(a) specifies an 8- to 16-mesh-per-inch strainer for reciprocating engine installations, and a strainer which will prevent passage of any

object which could restrict fuel flow or damage any fuel system component for turbine installations.

(2) In addition to the requirement of § 29.977(a), the flow area of the strainer should be at least five times the area of the outlet line. Furthermore, the diameter of the strainer must be at least that of the fuel tank outlet line.

(3) Each finger strainer should be accessible for inspection and cleaning.

(4) Compliance with § 29.977 is usually verified by inspection, and testing is not required. The ice protection provisions of § 29.951(c) are applicable to the strainer at the fuel outlet, and testing to show compliance with that provision may be required.

AC 29.979. § 29.979 (Amendment 29-12) PRESSURE REFUELING AND FUELING PROVISIONS BELOW FUEL LEVEL.

a. Explanation.

(1) Each fueling system that has the fueling connection below the fuel level in the tanks must prevent the loss of fuel if the fuel entry valve malfunctions.

(2) For pressure refueling systems, a back-up limiting device must be provided in addition to the primary means for limiting the amount of fuel in the tank.

(3) Components of the pressure fueling and defueling systems must be able to withstand an ultimate load that is 2.0 times the maximum pressure (positive or negative) most likely to occur during fueling or defueling. This requirement provides a level of structural integrity for the pressure fueling and defueling system components in the event a system malfunction occurs, which would result in an overpressurization of the fuel system. The fuel tanks and vents are not included in this requirement.

b. Procedure.

(1) Designs which have the pressure refueling and fueling provisions below the fuel level in each tank must demonstrate that when there is a malfunction of the fuel entry valve, no hazardous quantity of fuel will be lost. Generally, any amount of fuel loss in excess of 8 ounces is considered to be hazardous. Any amount of fuel that can come in contact with an ignition source is hazardous and unacceptable. Compliance should be demonstrated by test and supported by a failure mode and effects analysis.

(2) For pressure refueling systems, one of the most hazardous failure modes is an undetected overpressurization of the fuel tank which could lead to a number of potential fuel system failures. The pressure refueling system must contain a device which insures that fuel tank capacity cannot be exceeded. This device can operate on a differential pressure principle or can sense fluid level. A back-up limiting device is required in case of failure of the primary limiting device. Compliance must be

demonstrated by test. A failure mode and effects analysis should be performed which verifies that the failure of either the primary or back-up limiting device will not result in the failure of the other limiting device.

(3) The rotorcraft pressure fueling and defueling systems must be designed to withstand an ultimate internal pressure load that is twice the maximum pressure that is likely to occur during fueling or defueling. The maximum pressure will include surges that could occur from the fueling source and/or from any single tank valve or combination of valves being either intentionally or inadvertently closed. System substantiation may be demonstrated by analysis or test. The substantiation should include all components of the pressure fueling and defueling system except the fuel tank and the fuel tank vents. The rotorcraft defueling system must also be substantiated for a negative pressure application. If tests are conducted, the pressure measurements for both tests (positive and negative) will be made at the fueling connection and the test set-up should conform to the installed system.

SUBPART E - POWERPLANT

FUEL SYSTEM COMPONENTS

AC 29.991. § 29.991 FUEL PUMPS.

a. Explanation.

(1) Section 29.991, paragraph (a) provides a definition of the main pump(s) and § 29.991, paragraph (b) requires an "emergency pump(s)." The main pump(s) that is certified as part of the engine does not fall under § 29.991 requirements. The main pump(s) discussed under § 29.991 should therefore be considered "main aircraft pump(s)."

(2) The main aircraft pump(s) consists of whatever pump(s) is required to meet engine or fuel system operation throughout the range of ambient temperature, fuel temperature, fuel pressure, altitude, and fuel types intended for the rotorcraft. If the main aircraft pump(s) is required to meet the above criteria, then an emergency pump(s) is required.

b. Procedures.

(1) Each pump classified as a main aircraft pump, which is also a positive displacement pump, must have provisions for a fuel bypass. An exception is made for fuel injection pumps used on certain reciprocating engines and for the positive displacement, high pressure, fuel pumps routinely used in turbine engines. The bypass may be accomplished via internal spring check valve and fuel passage, or by external plumbing and a check valve. High capacity positive displacement pumps with internal pressure relief and recirculation passages should be checked for overheating if they may be expected to operate continuously at or near 100 percent recirculation.

(2) Section 29.991, paragraph (b) specifies a requirement for "emergency" pumps to provide the necessary fuel after failure of any (one) main aircraft pump. (Injection pumps and high pressure pumps used on turbine engines are exempt.) As stated in this rule, the "emergency" pump must be operated continuously or started automatically to assure continued normal operation of the engine. For some multiengine rotorcraft, another main aircraft pump may possibly be used as the required "emergency" pump. In this case, the dual role of this pump requires it to have capacity to feed two engines at the critical pressure/flow condition. Availability of fuel flow from this backup pump must be automatic and this function should be verified in the preflight check procedure. For Category A rotorcraft, a comprehensive fault analysis of the fuel system is mandatory to assure compliance with § 29.903, paragraph (b).

(3) Section 29.991, paragraphs (c)(1)(i) and (ii) address the situation, usually associated with supercharged reciprocating engines, where fuel pressure must be modulated with respect to carburetor deck pressure. This is accomplished with interconnecting air lines from the carburetor intake (after the supercharger) to the pressure relief connection on the fuel pump(s). A similar connection from the carburetor intake to the vented side of the fuel pressure gauge is needed to obtain correct fuel pressure reading. These systems may require orifices and/or surge chambers to operate correctly.

(4) Section 29.991, paragraphs (c)(2) and (3) requires seal drains which drain safely. A drain impingement test is normally required to verify safe drainage. Use of a colored dye to simulate fuel discharge at the drain line exit or a fluid sensitive coating (Bon Ami) on the aircraft skins will facilitate evaluation of the safety aspects of drain impingement. Pump seal drain requirements would not be applicable for tank immersed pumps.

AC 29.991A. § 29.991 (Amendment 29-26) FUEL PUMPS.

a. Explanation. Amendment 29-26 revises § 29.991 to clarify fuel pump redundancy requirements. Redundancy for fuel pump failure includes consideration of both the pump and the pump motivating device.

(1) Section 29.991(a)(1) now stipulates that a single fuel pump failure should not jeopardize the capability of the fuel system from delivering the fuel necessary to satisfy the requirements of § 29.955. This stipulation excludes any fuel pumps that are approved as a part of the type certificated engine.

(2) Section 29.991(a)(2) expands the stipulation of § 29.991(a)(1) by including any component(s) required to drive the fuel pump (such as electric motors or generators for electric pumps). This section also stipulates that if the pump is engine driven, failure should not affect more than the engine served by the pump.

b. Procedures. The method of compliance for this section is unchanged.

AC 29.993. § 29.993 FUEL SYSTEM LINES AND FITTINGS.

a. Explanation. This rule outlines design requirements for fuel system lines.

b. Procedures.

(1) Compliance is usually obtained by employing routing and clamping as described in paragraph 709, Chapter 14, Section 2, of AC 43.13-1A and by monitoring the arrangement throughout the developmental and certification test period. Requirements for approved flexible lines may be resolved by utilizing lines listed as TSO C53a approved for installation in either normal or high temperature areas as appropriate.

(2) Verify adequate clearance exists between lines and elements of the rotorcraft control system at extremes of control travel, including control deflections and, for flexible lines (hoses), possible variations in routing.

(3) Flexible lines inside fuel or oil tanks require special evaluation to assure that the external surfaces of these lines are compatible with the fluids involved and that fluid sloshing will not cause line failure. Lines inside tanks should be routed to avoid impingement by fuel or oil filler nozzles.

(4) Good design practice suggests that all flammable fluid lines should be routed to minimize the possibility of rupture in the event of a crash or from engine rotor disc failure.

AC 29.995. § 29.995 (Amendment 29-13) FUEL VALVES.

a. Explanation. This regulation requires that fuel valves be supported so that no loads resulting from their operation or from accelerated flight conditions are transmitted to the lines attached to the valve.

b. Procedures. Compliance with this rule is usually accomplished by designing the installation of the fuel valve so that the valve is supported by either primary or secondary airframe structure.

AC 29.997. § 29.997 (Amendment 29-10) FUEL STRAINER OR FILTER.

a. Explanation. This rule provides for a main in-line fuel filter designed to collect all fuel impurities which could adversely affect fuel system and engine components downstream of the filter. The rule also requires a sediment bowl and drain (or that the bowl be removable for drain purposes) to facilitate separation of contaminations, both solid and liquid, from the fuel.

b. Procedures.

(1) The filter should be mounted in a horizontal segment of the fuel line to facilitate proper action of the sediment bowl. If the filter is located above the fuel tank, it becomes necessary to activate a fuel boost pump to achieve positive drainage of the filter bowl. Without pump pressure, air may enter the fuel system during the filter draining operation and, for turbine engines, result in transient power surges or engine failure during subsequent engine operation. A flight manual note to require pump(s) to be “on” during filter draining would be appropriate.

(2) Section 29.997(d) sets forth a requirement for filter capacity and for filter mesh. The capacity requirement may be substantiated by showing that the filter, when partially blocked by fuel contaminates (to a degree corresponding to the indicator marking or setting required by § 29.1305(a)(17)), does not impair the ability of the fuel

system to deliver fuel at pressure and flow values established as minimum limitations for the engine. The filter mesh must be sized to prevent passage of particulate which cannot be tolerated by the engine. FAR Part 33 requires that the degree and type of filtration be established. This information should be the base for selecting the filter mesh. Although a test may be devised and conducted, data from the filter manufacturer usually are acceptable to verify compliance. Note that when the filter capacity is reached, continued flow of contaminated fuel may result in engine failure. A flight manual note regarding precautionary procedures is appropriate.

(3) FAR Part 33 (through Amendment 33-6) has an identical requirement for a fuel filter for engine fuel systems; however, it is not intended that two filters should be required.

AC 29.997A. § 29.997 (Amendment 29-26) FUEL STRAINER OR FILTER.

a. Explanation. Amendment 29-26 requires that a fuel strainer or filter should be installed between the fuel tank outlet and the first fuel system component that is susceptible to fuel contamination. Components that will be protected from contamination include but are not limited to fuel metering devices which control flow rate, fuel heaters, and positive displacement pumps. The amendment also requires a sediment bowl and drain (unless the bowl is readily removable for drain purposes) to facilitate separation of solid and liquid contaminants from the fuel.

b. Procedures.

(1) The fuel strainer or filter should be accessible for draining and cleaning. It should incorporate a screen or other element that is easily removable. It should be mounted so that its weight is not supported by the inlet or outlet connections of the strainer itself, unless it can be shown that adequate strength margins exist in the lines and connections.

(2) The fuel strainer or filter should have a sediment trap and drain (unless the trap is readily removable for drain purposes). The volume capacity of the sediment trap is specified in § 29.971(a) (0.10 percent of the tank capacity or 1/16 of a gallon).

(3) The fuel strainer or filter mesh should provide the filtration stipulated in the FAA/AUTHORITY-approved engine installation manual that is prepared for the type certificated engine (FAR Part 33).

(4) The fuel strainer or filter should have the capability to remove any contaminant that would jeopardize the flow of fuel that is necessary to meet the requirements of § 29.955. In addition, the strainer or filter should have a bypass system with an impending bypass indicator (Refer to § 29.1305(a)(17)). When the strainer or filter is partially blocked with contaminants, to the degree that the fuel flow requirements of § 29.955 can no longer be achieved, the impending bypass indicator should be activated. At this point, the strainer or filter should not yet be bypassing

unfiltered fuel. Although a test may be devised and conducted, data from the filter manufacturer usually are acceptable to verify compliance. Note that when the filter capacity is reached, continued flow of contaminated fuel may result in engine failure. A flight manual note regarding precautionary procedures is appropriate.

(5) Section 33.67(b) has an identical requirement for a fuel filter for engine fuel systems; however, it is not intended that two filters should be required.

AC 29.999. § 29.999 (Amendment 29-12) FUEL SYSTEM DRAINS.

a. Explanation. This regulation provides for fuel system drains and defines the requirements which the system must meet.

b. Procedures.

(1) The location and function of the fuel system drains are an integral part of any fuel system. There may be several drains required dependent upon the fuel system design. Each fuel tank sump and certain types of fuel strainers or filters require a means to drain (reference §§ 29.971 and 29.997).

(2) Selection of the location and orientation of the drain discharge in the design phase is important to assure that there is no impingement on any part of the rotorcraft. To show compliance with the requirement may require tests dependent upon whether the applicant has a previously approved design which is similar, or if the system is a new design for which no previous experience is available.

(3) The location of the drain valve should be selected so that the requirements for accessibility, ease of operation, and protection are met.

(4) Advisory Circular 20-119 provides an acceptable means, but not the only means, of compliance with the requirement for positive locking of fuel drain valves in the closed position.

(5) The fuel drain installation on aircraft with retractable landing gear will be satisfactory if recessed within the outside surface of the aircraft.

AC 29.999A. § 29.999 (Amendment 29-26) FUEL SYSTEM DRAINS.

a. Explanation. Amendment 29-26 adds the requirement that fuel system drains be effective with the rotorcraft in any allowable ground attitude including uneven terrain. In addition, the change amended § 29.999(b)(2) to require fuel drains have a means to ensure positive closure as contrasted to positive locking when in the “off” position. This will accommodate designs featuring spring-loaded drain closures that have been found to be satisfactory.

b. Procedures. All of the policy material pertaining to this section remains in effect. Additionally, selection of the location and orientation of the fuel drain discharge in the design phase is important to assure that there is no impingement upon any part of the rotorcraft. The location and orientation should also ensure effective fuel drainage when the rotorcraft is parked on uneven terrain. To show compliance with the requirement, tests may be required, dependent upon whether the applicant has a previously approved design that is similar, or the system is a new design for which no previous experience is available.

AC 29.1001. § 29.1001 (Amendment 29-26) FUEL JETTISONING.

a. Explanation. Amendment 29-26 adds § 29.1001 to set forth the certification requirements for a fuel jettisoning system if it is installed in the rotorcraft.

b. Procedures. In showing compliance with the requirements of § 29.1001, the following guidance is provided.

(1) The fuel jettison system should be demonstrated to be safe in all normal flight regimes. Takeoff, hover, and in-ground-effect maneuvers may be excluded if appropriate limitations are prescribed.

(2) The fuel jettison system, and its operation, should be shown to be free from fire hazard. If possible, the fuel should discharge clear of any part of the rotorcraft; however, it should be shown that any fumes or fuel, that do impinge upon the rotorcraft in the form of a fine mist, does not form droplets that run along the exterior structure and enter any part of the rotorcraft (wheel wells, cargo area, tail boom, etc.). It should also be shown that jettisoned fuel is not ingested by the engines or the auxiliary power unit (APU). This demonstration can be conducted by jettisoning a glycol based, dye colored fluid and noting the pattern displayed on a dye sensitive coating applied to the rotorcraft exterior. The demonstration should be conducted over all flight regimes in which system operation is permitted. The demonstration should also take into account the maximum rate of descent and all airspeeds where fuel impingement upon the fuselage would most likely occur. Rotorcraft controllability should remain satisfactory throughout the fuel jettisoning operation and should also be demonstrated.

(3) The requirements in § 29.1001(c) were established to prevent complete fuel depletion and provide the capability to effect continued safe flight and landing.

(4) The controls for the fuel jettison system should be designed so that a “minimum” flight crew can perform the jettison operation and be able at any time to stop the jettison process or begin it again. These design requirements give the flight crew the capability and flexibility to manage their on-board resources.

(5) The requirements of § 29.901(c) are intended to emphasize that no single failure or malfunction or probable combination of failures of the fuel jettisoning system will jeopardize the safe operation of the rotorcraft.

(6) If the rotorcraft has an auxiliary fuel tank, an auxiliary fuel jettisoning system may be installed to jettison the additional fuel provided the jettisoning system has separate and independent controls and it also meets all of the requirements of this section.

SUBPART E - POWERPLANT

OIL SYSTEM.

AC 29.1011. § 29.1011 OIL SYSTEM - GENERAL.

a. Explanation.

(1) The oil system provided for each installed engine should provide all of the lubrication required by the engine and supply it at a temperature which is within the operating temperature limits established for that engine when it was certified.

(2) The usable oil capacity of each oil system should be sufficient to provide oil to the engine at the maximum oil consumption limit of the engine under critical operating conditions. All circulating requirements and operating temperature limits for the oil should be met.

b. Procedures.

(1) There are three basic engine oil supply and cooling system concepts that are used. There are self-contained systems (a complete system certified with the engine), systems that have both engine and airframe components, and systems that are totally supported by airframe components. Any one of these three concepts can be used to meet the requirement of having an independent oil system for each engine.

(2) Oil tank capacity is primarily determined by the engine's oil consumption rate. Other factors which should be considered when sizing the oil supply system are the endurance of the rotorcraft under critical operating conditions, and the amount of oil circulating in the system to maintain proper cooling. Adequacy of the engine oil supply system can be shown by analysis supported by engine oil consumption and cooling system data. For reciprocating engines, the ratio of one gallon of oil for each 40 gallons of fuel can be used; however, an oil-fuel ratio lower than 1:40 can be used if properly substantiated by oil consumption data on the engine.

(3) The engine oil cooling requirements are defined in §§ 29.1041 through 29.1049. The design of the engine oil cooling system will be influenced by hot day conditions, by the engine heat rejection rate, and other oil system operating data provided by the engine manufacturer. Sizing of the oil cooler will depend upon the engine data and whether the oil cooler will also be used for main transmission oil cooling. Oil cooler size should be kept as small as possible due to its effect on rotorcraft structure, but in all cases, adequate cooling should be demonstrated throughout the operating envelope of the rotorcraft.

AC 29.1013. § 29.1013 (Amendment 29-10) OIL TANKS.

a. Explanation. This regulation identifies the requirements that each oil tank must meet. It also specifies that the oil tank installation must meet the installation requirements of § 29.967.

b. Procedures.

(1) The oil tanks usually are constructed of aluminum, aluminum alloy, or stainless steel and are of such a design to permit installation in the aircraft as close to the engine as the design allows. The choice of materials will generally be determined by the selected location of the tank. The tank envelope or outline will generally be determined by the location within the structure of the rotorcraft.

(2) The design of the tank is required to meet the expansion space requirements as specified in the regulation for the particular installation. This is generally accomplished by locating the filler cap in such a manner that the expansion space cannot be inadvertently filled with the rotorcraft in normal ground attitude.

(3) The tank is required to be properly vented and the vent requirements are identified in the regulation.

(4) Unless alternate means are provided, it is good design practice to locate the oil tank with respect to the engine so that when the rotorcraft is in its normal ground attitude, a positive head to the oil pump inlet is provided.

(5) Sections of the regulation address specific requirements when Category A certification is requested.

(6) The designer should be aware of the requirements associated with the location of the oil tank outlet and the marking requirements specified in § 29.1557(c)(2).

(7) Flexible oil tank liners may be used; however, they must be approved or shown to be suitable for the particular installation.

(8) An “external oil system” which is defined as being those components, lines, etc., of an oil system which are outside the engine and not supplied as part of a certificated engine. The components of such a system which are within the fire zone and required to be fire resistant. Those outside the fire zone need not be fire resistant.

AC 29.1015. § 29.1015 (Amendment 29-10) OIL TANK TESTS.

a. Explanation. This regulation defines the tests that must be accomplished to show compliance for rotorcraft oil tanks.

(1) The oil tank should be designed and installed so that it can withstand, without failure, any vibration, inertia, and fluid loads to which it may be subjected in operation.

(2) The installation should meet the requirements of § 29.965 except that for pressurized tanks used with turbine engines, the test pressure may not be less than 5 PSI plus the maximum operating pressure of the tank. For all other tanks, the test pressure may not be less than 5 PSI.

b. Procedures. The pressure tests require that 5 PSI plus operating pressure but in any case no less than 5 PSI be used to substantiate the oil tank. To accomplish these tests, the various tank openings are sealed. An adapter fitting is fabricated by which regulated, pressurized air is introduced into the tank. This air pressure is measured by means of a calibrated air pressure gauge. Any of several methods to determine whether the tank is leaking may be used. As an example, if the tank is relatively small, emergence in a tank of water may be used. Other means such as applying soapy water to the joints are also satisfactory. In any respect, the leak check using test fluid conforming to Federal Specification TT-S-735, Type III, may also be used.

AC 29.1017. § 29.1017 OIL LINES AND FITTINGS.

a. Explanation. This regulation outlines the certification requirements for oil lines and fittings.

b. Procedures. The oil system lines and fittings are required to meet the requirements of § 29.993; therefore, the routing and clamping described in paragraph 709, Chapter 14, Section 2, of AC 43.13-1A may be utilized as guidance for the system design. An evaluation carried out through the development and certification test period will usually surface any problems of interference and/or vibration.

(1) When flexible hoses are used in the lubrication system they must be substantiated. Hoses listed in TSO C53a may be used which would preclude certain substantiation requirements.

(2) Location of the breather lines and discharge should be carefully evaluated to determine that the requirements of this paragraph are followed.

(3) The routing of fluid lines should be such that drooping lines and fluid traps which are undrainable are avoided.

AC 29.1019. § 29.1019 (Amendment 29-10) OIL STRAINER OR FILTER.

a. Explanation. This regulation defines the requirements for the engine oil system strainer or filter. If a strainer or filter which meets the requirements of this paragraph is

incorporated as part of the type certificated engine, an additional airframe filter is not required.

b. Procedures. This paragraph requires an oil strainer or filter through which all of the oil flows for each turbine engine installation. The strainer or filter should be sized to allow oil flow at the flow rates and within the pressure limits as specified in the engine requirements. The effect of oil at the minimum temperature for which certification is sought should be accounted for.

(1) For each oil strainer or filter required by § 29.1019(a) which has a bypass, the bypass should be sized to allow oil flow at the normal rate through the oil system with the filtration means completely blocked.

(2) For each oil strainer or filter installed per this rule, the capacity must be such that the oil flow and pressure are within the operating limits established for the engine. The mesh requirements are determined by the engine specification for the filtration of particle size and density.

(3) Section 29.1019(a)(3) requires an indicator that will show when the contaminant level of the filtration system, as specified in § 29.1019(a)(2), has been reached. The indicator should signal a contaminant level which has not caused the filter to go into a bypass condition. Consideration should also be given so that the contaminant level at which the indicator is activated is such that the filter would not bypass during a flight time based on full fuel at a cruise condition with the lubricant contaminated to the degree used to show compliance with § 29.1019(a)(2).

(4) An evaluation of the construction and location of the bypass associated with the strainer or filter should be accomplished. The appropriate installation of the filter based on this evaluation would preclude the release of the collected contaminants in the bypass oil flow.

(5) If an oil strainer or filter installed in compliance with this regulation does not have a bypass, there must be a means to connect it to the warning system required in § 29.1305(a)(18). This warning should indicate to the pilot the contamination before it reaches the capacity established in § 29.1019(a)(2). Section 29.1019(b) covers the blocked oil filter requirements associated with reciprocating engine installations. The lubrication system should be such that the normal oil flow will occur with the filter completely blocked.

AC 29.1019A. § 29.1019 (Amendment 29-26) OIL STRAINER OR FILTER.

a. Explanation. Amendment 29-26 relaxes the requirements of § 29.1019(a)(3) from requiring an indicator to indicate the contamination level of oil filters. The rule change allows acceptance of a “means to indicate” the contaminate level to allow a wider range of acceptable methods of compliance.

b. Procedures. Unless the filter is located at the oil tank outlet, § 29.1019(a)(3) requires that the oil strainer or filter have the means to indicate when the contaminant level of the filtration system, as specified in § 29.1019(a)(2), has been reached. If the indicator is installed, it should signal a contaminant level that will allow completion of the flight before the filter reaches a bypass condition. The indicator may be a pop-out button or other maintenance cue that is checked on each preflight inspection.

AC 29.1021. § 29.1021 OIL SYSTEM DRAINS.

a. Explanation. This regulation requires provisions be provided for safe drainage of the entire oil systems and defines certain requirements for assuring that no inadvertent oil flow occurs from the system provided.

b. Procedures. The design of the oil system must provide a means for safe drainage of the entire oil system. This may require one or more drains dependent upon the design of the system. If a valve is used for this function, it must provide a means for a positive lock in the closed position. The method by which the lock is accomplished may be manual or automatic.

AC 29.1023. § 29.1023 OIL RADIATORS.

a. Explanation. This regulation defines the installation requirements to be considered for oil system radiators.

b. Procedures.

(1) The primary concern with respect to oil radiators is that they are sized to provide the required heat rejection and to provide adequate fluid flow within the prescribed pressure limits.

(2) The structural design of the radiator must consider the system oil pressure requirements and the service involvement of the intended application. The selection of the location of the radiator can have a significant bearing on its ability to withstand the vibration and inertia loads.

(3) If the system design incorporates an air duct to direct the airflow, the effects of a fire as defined in this regulation must be considered.

AC 29.1025. § 29.1025 OIL VALVES.

a. Explanation. This regulation identifies the requirements which oil system valves must meet. In addition to the items specified in this rule, this regulation specifies compliance with the requirements of § 29.1189.

b. Procedures. The closing of the oil shutoffs may not preclude a safe autorotation. Compliance with this requirement is best accomplished in the design

phase. This can be accommodated by proper orientation of the valve and/or system plumbing routing. Another means is to design adequate entrapment of lubricants to provide for the autorotation state. The design of the oil shutoff valve must consider the stop or index provisions of this rule. The installation must be such that the loads specified in the rule are addressed.

AC 29.1027. § 29.1027 (Amendment 29-26) TRANSMISSION AND GEARBOXES: GENERAL.

a. Explanation. Amendment 29-26 adds a new § 29.1027. This new section provides the regulations for rotorcraft transmission and gearbox lubrication systems. It incorporates lubrication system requirements that were removed from § 29.1011 and adds additional lubrication system requirements that were derived from existing engine-oil system requirements. These additional requirements have been adjusted or modified to reflect the needs of transmissions and gearboxes. Transmission and gearbox lubrication system regulations are similar to those for engines; therefore, reference is made to the engine lubrication sections as applicable.

b. Procedures.

(1) The pressure lubrication systems for rotorcraft transmissions and gearboxes should comply with the same requirements as the engine lubrication systems stipulated in § 29.1013 (except §§ 29.1013(b)(1), 29.1015, 29.1017, 29.1021, and 29.1337(d)). These sections provide the requirements for oil tanks, tank tests, oil lines and fittings, and oil system drains.

(2) Each pressure lubrication system for rotorcraft transmissions and gearboxes should have an oil strainer or filter. The strainer or filter should:

(i) Remove any contaminants from the lubricant that may damage the transmission, gearbox, or other drive system component and any contaminants that may impede the lubricant flow to a hazardous degree.

(ii) Be equipped with a means to indicate that the bypass system (required by § 29.1027(b)) is at the point of opening, due to the collection of contaminants on the strainer or filter; and,

(iii) Be equipped with a bypass system that will permit lubricant to continue to flow at the normal rate if the strainer or filter is completely blocked. In addition, the bypass system should be designed so that contaminants, that have collected on the filter, will not enter the bypass flow path when the system is in the bypass mode.

(3) Section 29.1027(b)(2) requires a screen at the outlet of each lubricant tank or sump that supplies lubrication to rotor drive systems and rotor drive system components. The screen should remove any object that might obstruct the flow of

lubricant to the filter required by § 29.1027(b)(1). The requirements of § 29.1027(b)(1) do not apply to the tank outlet screen.

(4) Splash-type lubrication systems for rotor drive system gearboxes should comply with §§ 29.1021 and 29.1337(d).

SUBPART E - POWERPLANT

COOLING

AC 29.1041. § 29.1041 COOLING - GENERAL.

a. Background.

(1) Few substantive changes have been made to the cooling provision requirements, §§ 29.1041 through 29.1049, since the rules were defined in the Civil Air Regulations, Part 7, effective August 1, 1956. Testing procedures utilized have not precisely followed those rigorously set forth in §§ 29.1045 through 29.1049 as industry and the FAA/AUTHORITY have recognized the need to vary procedures slightly to accomplish the practical test objectives.

(2) In the paragraphs which follow, the cooling regulations will be explained, and in some instances where the regulations provide specific procedures, “alternative procedures” which have been found acceptable in achieving the rule objectives will be presented. The intent of providing those alternative procedures is not to promulgate new regulations, but rather to provide recognized, accepted procedures for compliance with the objective of the current standards.

b. Explanation.

(1) The rotorcraft design should provide for cooling to maintain the temperatures of all powerplant, auxiliary power unit, and power transmission components and fluids within the limitations established for these items.

(2) Cooling provisions should be adequate for shutdown and for water, ground, and flight operating conditions.

(3) The adequacy of the cooling provisions should be demonstrated by flight testing.

c. Procedures.

(1) Detailed procedures for the demonstration of climb, takeoff and climb, and hover cooling are given in §§ 29.1045 through 29.1049. Other test conditions and procedures necessary to demonstrate adequate cooling for water, ground, flight, and shutdown conditions must be negotiated between the applicant and the FAA/AUTHORITY certification engineer. A cooling test proposal which defines the agreed test points and procedures should be prepared well in advance of the official certification testing.

(2) The test conditions selected, in addition to those in §§ 29.1045 through 29.1049, would typically include cruise at various airspeeds and altitudes, shutdown

after prolonged hover, and sling load cooling if applicable. One test condition which should be examined, particularly with regard to transmission cooling, is the point of highest multiengine mechanical power at the maximum ambient temperature. This is identified as test point “A” in figure AC 29.1041-1. The selection of test points should be tempered with engineering judgment and based on results from similar aircraft, if such data are available.

(3) In showing compliance with the cooling requirements, the applicant should not be required to exceed rotorcraft established limits (gross weight, drive system torque, measured gas temperature, etc.), aircraft power required, or power available. The applicant may elect, however, to exceed these limits in order to minimize test points by conservative testing, or to anticipate future growth (increased gross weight, etc.).

(4) The need for a comprehensive cooling test plan prior to certification testing cannot be overemphasized. Highly derated engine installations, the relationship of power required to power available, the use of bleed air devices which would increase the measured gas temperature while aircraft power required remains the same, auxiliary cooling provisions, and the increase in engine temperatures with engine deterioration are factors which could affect the selection of cooling demonstration test points. The following paragraphs will provide some general guidance, but the cooling test plan is the key to a successful program.

MULTIENGINE POWER AVAILABLE

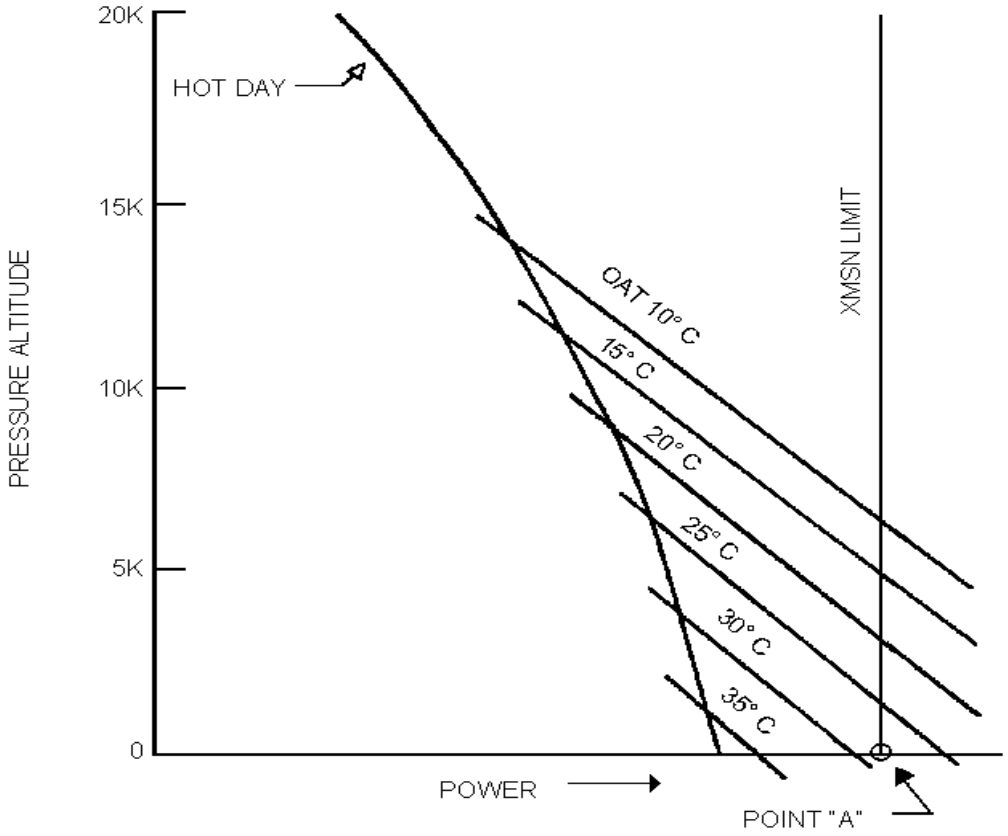

FIGURE AC 29.1041-1 ADDITIONAL COOLING TEST POINT

AC 29.1043. § 29.1043 (Amendment 29-15) COOLING TESTS.

a. Explanation.

(1) Section 29.1043(a) requires that certain ambient temperature correction factors be applied unless testing is accomplished at the maximum ambient atmospheric temperature prescribed.

(2) No corrected temperatures may exceed established limits.

(3) The statement of § 29.1043(a)(4) which requires that test procedures be in accordance with §§ 29.1045 through 29.1049 does not limit testing to the conditions prescribed in those sections. Section 29.1041(a) and (b) provide the basis for examination of other operating and shutdown conditions.

(4) The maximum ambient atmospheric temperature must be at least 100° F at sea level, lapsed to altitude at a rate of 3.6° F per 1,000 feet pressure altitude. The applicant may select a lower maximum ambient atmospheric temperature for winterization installations.

(5) Unless a more rational correction applies, the temperature data (except for cylinder barrels) are to be corrected by adding the difference between the maximum ambient atmospheric temperature and the temperature of the ambient air at the time of the first occurrence of the maximum component or fluid temperature recorded during the cooling test.

(6) Cylinder barrel temperature data are corrected in a similar manner to other components except 0.7 times the difference between the maximum ambient atmospheric temperature and the ambient temperature at the first occurrence of the maximum cylinder barrel temperature is applied.

b. Procedures.

(1) Seldom is testing actually accomplished at the maximum required ambient temperature of at least 100° F at sea level lapsed 3.6° F per 1,000 feet pressure altitude. Component and fluid temperatures must therefore be corrected to derive the item temperature that would have been reached if the test day had matched exactly the maximum ambient temperature day. The applicant may select a higher maximum ambient temperature for cooling certification than the 100° F sea level hot day prescribed. Provisions are also made for selecting a maximum ambient temperature less than the 100° F sea level hot day for winterization installations not intended to function at the hot day conditions.

(2) When cooling test ambient conditions are cooler than the selected or prescribed hot day conditions, the applicant may take advantage of cooling air or fluid

flows that would exist at hot day conditions. For example, thermostatically controlled oil cooler flow could be set for hot day conditions.

(3) The component and fluid temperature correction factor to be applied when test ambients do not correspond to the hot day conditions is commonly called the "degree-for-degree correction." It may be possible to justify, and the regulation allows the application of a more rational, less conservative correction factor. A correction factor other than degree-for-degree should be based on engineering test data.

(4) No corrected temperatures may exceed established limits. In order to maintain temperatures within established limits, the applicant may be willing to accept lesser performance than the full capability of a device. For example, a starter/generator capable of cooling under test cell conditions to 200 amperes continuous load may be limited to a lesser value, perhaps to 150 amperes, when installed in the aircraft due to cooling considerations. This continuous load for cooling must be equal to or greater than the allowable continuous load designated on aircraft instruments.

c. Thermal Limit Correction.

(1) An important correction factor which is not discussed in the regulations, but is frequently necessary to show the cooling adequacy required by § 29.1041, is the thermal limit correction factor. This factor is sometimes required if, at test day conditions, the engine measured gas temperature does not correspond to that which would have occurred on a minimum specification engine at hot day conditions.

(2) The correction factor would not apply to those components not affected by changes in measured gas temperature (MGT) at a constant power. Typical items expected to be affected by changes in the MGT at constant power would be engine oil temperature, thermocouple harnesses, or other fluid, component, or ambient temperatures in the vicinity of the engine hot-section or exhaust gases. Other items remote from the hot-section, perhaps the starter-generator or fuel control, would not be expected to be influenced by MGT variations; however, the items affected and the magnitude of the factor to be applied should be established by testing.

(3) There are several acceptable methods for establishing the appropriate thermal limit correction factor during development testing. The general idea is to establish a stabilized flight condition, typically ground-run or IGE hover, and to vary the measured gas temperature at approximately fixed power and OAT conditions. This may be accomplished by utilizing engine anti-ice bleed air, customer bleed air, or by ingesting warmer than ambient air (either an external source or the engine bleed air) into the engine inlet. Care should be used in ingesting warmer than ambient air to assure that the warm air is diffused in order to avoid possible engine surge.

(i) If it is not possible to attain a suitable variation in MGT by these methods, an acceptable, but more conservative thermal limit correction may be

obtained by allowing both shaft horsepower and MGT to vary at a stabilized flight condition and OAT.

(ii) The component temperature is plotted as a function of MGT, and the thermal limit correction from any test day MGT for any flight condition, to the MGT that would have existed with minimum specification engines on a hot day, is then applied to derive the final measured component temperature.

(4) In certain rare instances, it may not be required that the correction factor be applied to the full thermal limit capability of the engine. Consider the following example for the hot day hover IGE cooling test point at sea level.

	Power (SHP)	Corresponding MGT (°C)
Drive System Limit	900	---
Twin-Engine Hot Day Power Available	1,050	750
Hot Day Power Required at Maximum G.W.	850	650
Engine Maximum Allowable MGT (Instrument Marking)	---	765
Test Day (90° F OAT) Parameters	850	600

(i) Notice that the installed hot day power available MGT from the engine performance program, is 15° C cooler than the limit MGT (750° vs. 765° C), thus the engine has 15° C “field margin” which would allow the engine temperature to gradually increase 15° C to maintain a given power as engine life is utilized. Secondly, the measured gas temperature corresponding to hot day power required at maximum gross weight, is less than that corresponding to either the drive system limit or twin-engine hot day power available. Thus, the thermal limit correction could be applied from the test day MGT, 600° C, to the power required MGT plus the field margin, 650° C plus 15° C, rather than applying the correction factor to the full thermal capability of the engine, 765° C.

(ii) Care should be used in applying this relieving method, because as the hover altitude changes, the maximum gross weight and power required (and the associated MGT) will vary. The data must be corrected to at least the maximum MGT for a minimum specification engine that can occur in service at the flight condition under investigation.

AC 29.1043A. § 29.1043 (Amendment 29-26) COOLING TESTS.

a. Explanation. Amendment 29-26 adds a new paragraph to § 29.1043(a)(5), to define “stabilization” as it pertains to powerplant systems cooling tests.

b. Procedures. All of the policy material pertaining to this section remains in effect with additional information that “stabilized temperatures” are achieved when the rate of change is less than 2° F per minute.

AC 29.1045. § 29.1045 CLIMB COOLING TEST PROCEDURES.

a. Objective. The objective of the regulation is to verify, for Category A and for Category B rotorcraft described, that cooling provisions are adequate for a one-engine-inoperative (OEI) climb or descent initiated from a multiengine cruise at the critical altitude with stabilized component temperatures. The specific flight conditions and powers are described in the regulation.

b. Explanation.

(1) This regulation specifies climb or descent cooling with OEI for Category A rotorcraft and for Category B rotorcraft with Category A powerplant isolation and fireproof or isolated structure, controls, etc., which are essential for controlled flight and landing. For the Category B machine described, the testing should be accomplished at the steady rate of climb or descent established under § 29.67(b), i.e., at the best OEI rate of climb (or descent) and the remaining engine at maximum continuous power or 30-minute power, whichever is applicable.

(2) The engine whose shutdown has the most adverse effect on the cooling conditions for the remaining engine(s) and powerplant components should be inoperative.

(3) The regulation provides that the climb cooling test may be conducted in conjunction with the takeoff cooling test of § 29.1047. This possible combining of tests applies only to § 29.1047(a), since § 29.1047(b) is a multiengine climb and not related to the OEI climb procedures of § 29.1045.

c. Procedures.

(1) The OEI climb cooling test point begins from a multiengine cruise, with stabilized fluid and component temperatures, 1,000 feet below either the all-engine-critical altitude or the maximum altitude at which the rate of climb is 150 FPM, whichever is the lowest altitude. If the minimum altitude derived is less than sea level, the climb should begin from a twin engine cruise with stabilized fluid and component temperatures at the minimum practical altitude.

(i) The all-engine-critical altitude is the maximum altitude at which, for the ambient conditions prescribed, it is possible to maintain the multiengine specified power. For example, if for multiengine operations, the transmission maximum continuous torque can be maintained on the hot day to a maximum altitude of 10,000 feet above which power would have to be reduced because of gas temperature or other limitations, then 10,000 feet is the all-engine-critical altitude. Point ”A” in figure AC 29.1045-1 illustrates the all-engine-critical altitude.

(ii) The 150 FPM climb criteria should be based on multiengine operation at maximum continuous power available at hot day conditions at maximum gross weight.

(iii) Fluid and component temperatures are considered stabilized when the rate of change is less than 2° F per minute.

(2) The OEI climb power to be utilized is 30-minute OEI hot day power available (if approval of 30-minute power on the aircraft is requested), followed by maximum continuous hot day power available. If 30-minute OEI power approval is not requested, the power to be utilized would be maximum continuous hot day power available.

(i) Rotorcraft for which approval of a continuous OEI power rating is requested would use the power available on a hot day at the maximum continuous OEI rating following the 30-minute OEI climb phase (or for the entire climb if approval of 30-minute OEI power is not requested).

(ii) If the maximum continuous OEI approval is not requested, then the highest hot day power available approved for continuous usage from the remaining engine(s) under OEI conditions would be used following the 30-minute OEI climb phase (or for the entire climb if approval of 30-minute OEI power is not requested).

(3) In order to achieve representative test results, the rotorcraft climb rate and airspeed should approximate those which would occur on a hot day. This is accomplished by adjusting rotorcraft gross weight as required to produce the desired climb rate based on published or predicted climb performance data. The possible adverse effects of climb fuselage attitude on cooling air duct entrances should be considered in the selection of center-of-gravity of the test aircraft.

(4) The OEI climb should be continued for at least 5 minutes after the occurrence of the highest temperature recorded or until the maximum certification altitude is reached. Generally, temperatures would be expected to peak a short time after the climb begins since component and fluid temperatures are stabilized prior to entry to the climb phase.

(5) For Category B rotorcraft, defined in § 29.1045(a)(2) without a positive OEI rate of climb, the descent should begin from a hot day maximum continuous power multiengine cruise, with stabilized fluid and component temperatures, at the all-engine-critical altitude.

(6) The descent should conclude at either the maximum altitude at which level flight can be maintained with one engine inoperative or at the minimum practical altitude, whichever is higher.

(7) The OEI powers available to be utilized during the descent would be the same as those prescribed previously for OEI climb cooling. OEI operation should continue until component and fluid temperatures stabilize.

(8) The airspeeds utilized in the climb and descents should be representative of normal speeds unless cooling provisions are sensitive to rotorcraft airspeed, in which case the airspeeds most critical for cooling should be used. In no case, however, should it be required that the selected airspeeds exceed the speeds established under §§ 29.67(a)(2) and 29.67(b).

MULTIENGINE POWER AVAILABLE

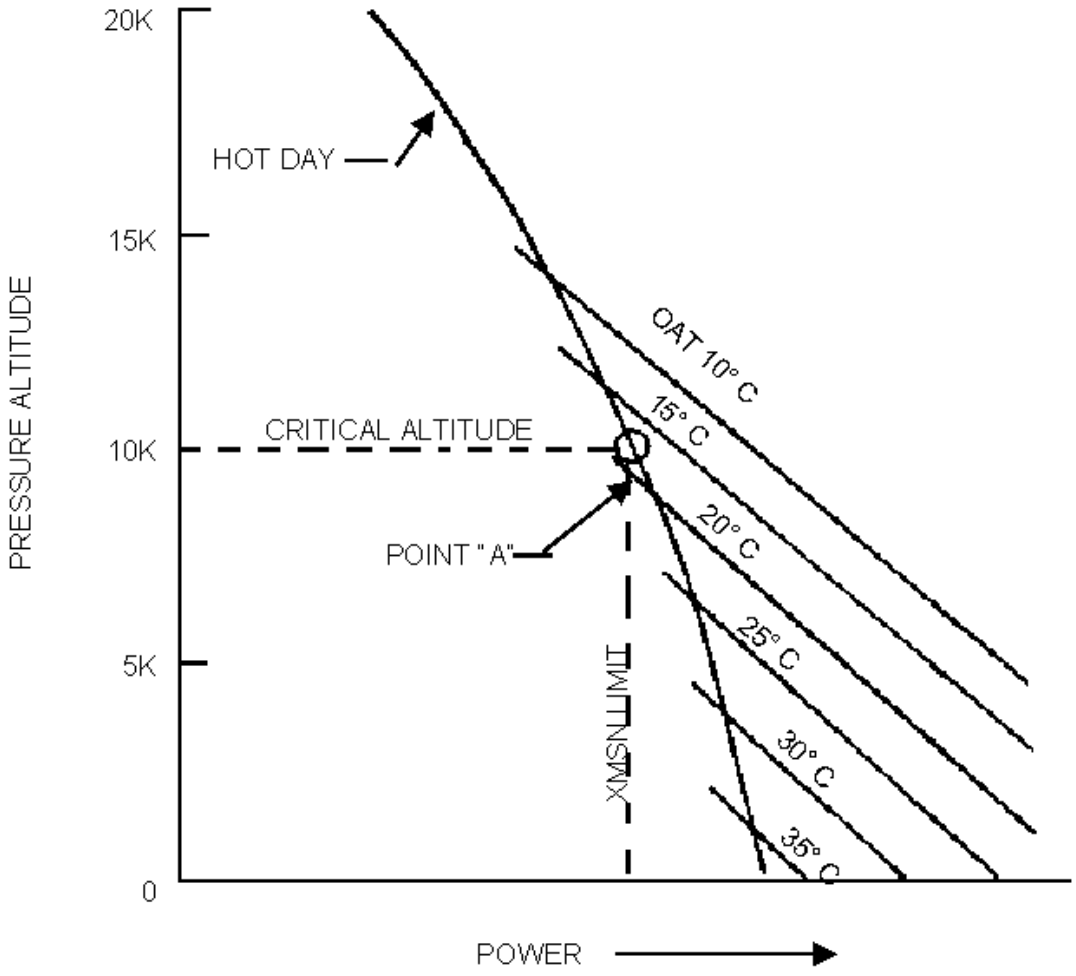

FIGURE AC 29.1045-1 ALL-ENGINE CRITICAL ALTITUDE
ADDITIONAL COOLING TEST POINT

AC 29.1047. § 29.1047 (Amendment 29-1) TAKEOFF COOLING TEST PROCEDURES.

a. Objective.

(1) For Category A rotorcraft, the objective is to verify satisfactory takeoff and OEI climb cooling for the Category A takeoff profile defined in aircraft performance §§ 29.59(c) and 29.67(a) following a prolonged hover.

(2) For Category B rotorcraft, the objective is to verify satisfactory cooling for the takeoff and subsequent climb for the Category B takeoff defined in performance §§ 29.63 and 29.65(a) following a prolonged hover.

b. Procedure - Category A.

(1) The rotorcraft is hovered in-ground-effect (IGE) at the power required to hover on the test day at the maximum Category A takeoff gross weight for the hot day, until temperatures stabilize.

(i) Alternate Procedure. If the test day OAT is high, it may not be possible to hover IGE at the prescribed gross weight without entering the takeoff range on the measured gas temperature (MGT) indicator. Since operations in the takeoff range are allowed only for 5 minutes and the typical stabilization time is 20 to 35 minutes, it is permissible to reduce the initial aircraft gross weight so the initial MGT will be at least at the MCP limit, but will not be in the takeoff range for more than 5 minutes; and

(ii) The fuel burn during the anticipated 20 to 35 minute stabilization period may cause the aircraft to leave the prescribed hover IGE condition unless power is reduced or additional weight is added by fluid transfer or other methods. It is permissible to reduce power to maintain the IGE hover for this phase of testing rather than attempt special weight control procedures.

(2) After temperatures have stabilized, an OEI climb is initiated from the lowest practicable altitude.

(i) Multiengine power may be used from the stabilized IGE hover to the CDP before OEI operations for cooling verification begin.

(ii) Actual shutdown of the simulated failed engine may not be necessary if the applicant can show that cooling of the remaining engine, fluids, and components is not affected by operation of the “failed” engine at idle power.

(iii) The power utilized at the initiation of the OEI climb would be the same as for establishing the takeoff climbout path of § 29.59, typically 2.5-minute OEI hot-day power available.

(3) After the time period for which the power is used in establishing the takeoff climbout path has expired, OEI power is changed to that used in meeting the steady rate of climb (150 FPM, 1,000 feet above the takeoff surface of § 29.67(a)(2)).

(i) The power to be used for this phase is 30-minute OEI hot-day power available, if approval of this power rating for performance is requested.

(ii) If 30-minute OEI approval is not requested, the highest hot-day power available approved for continuous usage under OEI conditions would be utilized.

(4) Climb at the OEI power used in meeting § 29.67(a)(2) would continue for at least--

(i) Thirty minutes if 30–minute OEI power is used; or

(ii) Five minutes after the occurrence of the highest temperature recorded, if other than 30-minute OEI is used.

(5) Unlike § 29.1045, the procedure set forth in § 29.1047 for Category A rotorcraft does not specifically require continuation of the OEI climb beyond the 30-minute duration allotted for 30-minute OEI power usage.

c. Procedure - Category B.

(1) The rotorcraft is hovered IGE until temperatures stabilize at the power required on the test day to hover IGE at the maximum Category B takeoff gross weight for the hot day.

(i) Alternate Procedure. If the test day OAT is high, it may not be possible to hover IGE at the prescribed gross weight without entering the takeoff range on the MGT indicator. Since operation in the takeoff range is allowed only for 5 minutes and the typical stabilization time is 20 to 35 minutes, it is permissible to reduce the initial aircraft gross weight so the initial MGT will be at least at the MCP limit, but will not be in the takeoff range for more than 5 minutes; and

(ii) The fuel burn during the anticipated 20 to 35 minute stabilization period may cause the aircraft to leave the prescribed hover IGE condition unless power is reduced or additional weight is added by fluid transfer or other methods. It is permissible to reduce power to maintain the IGE hover for this phase of testing rather than attempt special weight control procedures.

(2) After temperatures have stabilized in hover IGE, a multiengine climb is initiated at hot-day takeoff power available from the lowest practicable altitude. Section 29.1047(b)(3) requires only that takeoff power be maintained for the same time interval as used in determining the takeoff flight path under § 29.63. This time interval

could be less than the 5 minutes for which takeoff power is approved. Unless the applicant can show that the time interval used in § 29.63 provides more conservative results, or unless additional testing is proposed, the full 5 minutes allowed for takeoff power should be used to assure that the most critical condition has been surveyed.

(3) After the use of takeoff power for the appropriate time interval, the power should be reduced to multiengine maximum continuous hot-day power available and the climb continued until at least 5 minutes after the occurrence of the highest temperature recorded.

(4) The airspeeds utilized in the climb should be representative of normal speeds unless cooling provisions are sensitive to rotorcraft airspeed, in which case the airspeed most critical for cooling should be used. The airspeed need not exceed the speed for best rate of climb with maximum continuous power available.

AC 29.1049. § 29.1049 HOVERING COOLING TEST PROCEDURES.

a. Objective. The objective is to verify satisfactory hover IGE cooling at sea level and at the hover ceiling for hot-day conditions.

b. Explanation. The rule provides for a hover IGE cooling check in still air at sea level and at the hover ceiling at maximum continuous power. Still air is interpreted as a wind speed of 5 knots or less.

c. Procedures.

(1) The aircraft should be hovered IGE at the maximum certificated hover weight or at the IGE hover weight corresponding to hot-day maximum continuous power available, whichever is less.

(i) The power utilized would normally be hot-day maximum continuous power available and the initial gross weight would be selected as required to achieve hover IGE on the test day.

(ii) After initiation of the hover, special weight control procedures need not be implemented in attempting to maintain hover IGE as fuel burn-off occurs. The power may be gradually reduced to maintain the IGE hover condition.

(2) The hover test is to continue until at least 5 minutes after the occurrence of the highest temperature recorded.

(3) Section 29.1049 also requires a hover IGE at the maximum continuous power available at the altitude resulting in zero rate of climb.

(i) Often, compliance is illustrated by extrapolating component cooling margins from sea level test results and from selected altitude test site results to the altitude resulting in zero rate of climb.

(ii) Considerable engineering judgment must be exercised in utilizing the extrapolation method described. In general, if test data is extrapolated more than 2,000 feet to the hover ceiling from the highest altitude site selected and the resulting component margin is less than 5° F, additional verification at altitude may be required.

SUBPART E - POWERPLANT

INDUCTION SYSTEM

AC 29.1091. § 29.1091 (Amendment 29-17) AIR INDUCTION.

a. Explanation.

(1) The air induction system for each engine and auxiliary power unit must supply the air required under the operating conditions for which certification is requested. For reciprocating engine installations, the system must provide air that is suitable for proper fuel metering and mixture distribution. This should be shown with the induction system valves in any position.

(2) The intake system shall be designed such that a backfire flame will not constitute a fire hazard within the engine accessory compartment or within other areas of the powerplant compartment.

(3) Each reciprocating engine must have an alternate air source which must be located to prevent entrance of rain, ice, or other foreign matter.

(4) For rotorcraft powered by turbine engines and rotorcraft incorporating auxiliary power units, there must be means to prevent leakage of hazardous amounts of flammable fluids from entering the engine or auxiliary power unit intake system.

(5) Also, the air ducts must be located or protected to minimize the ingestion of foreign matter during takeoff, landing, and taxiing.

b. Procedures.

(1) For turbine-engine installation, the induction system should supply air of suitable quality to meet the installation requirements of the engine manufacturer. The installation requirements should be met throughout the operating envelope of the rotorcraft. In addition, the design and location of the air induction system should prevent accumulations of rain or hail, either external or internal to the induction system, that could adversely affect engine operation.

(2) The inlet design should account for the prevention of hazardous fluids entering the engine. Some designs will have inlet ducts which are free from any fluid lines; however, other designs may route the engine inlet air through a compartment which has flammable fluid lines. When this condition exists, test demonstrations of critical leakage during operation have been used to substantiate the installation. The fluid leakage may not have an adverse effect on engine operation.

(3) The air induction system design should also account for and minimize the possibility of foreign matter ingestion during takeoff, landing, and taxiing.

(4) For reciprocating engine installations, the induction system should supply air of suitable quality and quantity to the combustion system of the engine. The condition of this air at the entering face of the carburetor is extremely important. For proper operation, it is essential that the airflow be smooth and uniform, clean, and unrestricted throughout the very wide range of horsepower expected from the engine.

AC 29.1093. § 29.1093 (Amendment 29-22) INDUCTION SYSTEM ICING PROTECTION.

a. Reciprocating Engines. No advisory material is presented here for reciprocating engines since it is unlikely that these types will be used in transport rotorcraft.

b. Turbine Engines - Ice Protection.

(1) Explanation.

(i) This rule requires turbine engines and turbine-engine inlets to perform satisfactorily in atmospheric icing conditions defined in Appendix C of Part 25. On an equivalent safety basis, the limited icing envelopes described in paragraph AC 29.877 herein may be used to show compliance with the intent of the regulation if the rotorcraft is limited to not greater than a 10,000-foot pressure altitude for all operations. If operations are permitted above 10,000 feet, the Appendix C, Part 25, envelope must be used from 10,000 feet to the service ceiling or 22,000 feet. These possible equivalent safety approaches are not discussed herein. Compliance with the induction system icing protection rule is required regardless of flight manual limitations or restrictions against flight into atmospheric icing conditions.

(ii) In showing compliance with § 29.1093(b)(1)(i), the FAA/AUTHORITY has accepted the concept of limited exposure associated with escape from inadvertent ice encounters.

(A) It is presumed that there will be a flight manual limitation against flight into known icing, and that the engine induction system will be reevaluated if total aircraft ice protection certification is requested. Under this concept, the rotorcraft is assumed to fly directly through the icing environment; i.e., direct sequential penetration and straight line exit from both the continuous maximum and intermittent maximum icing clouds. Thus, the duration of exposure to the icing environment could be calculated by knowing the aircraft flight speed and cloud horizontal extent. A range of engine power and rotorcraft airspeeds should be evaluated to encompass the operating envelope of the rotorcraft.

(B) When this limited exposure concept is used, the aircraft type certificate data sheet should clearly specify that the engine induction system must be reevaluated if certification to the general ice protection regulation, § 29.877 or § 29.1419, is requested. This direct penetration and exit approach is inappropriate for aircraft for which full icing clearance is requested (reference § 29.1419).

(iii) Engine induction system continuous icing protection would be necessary for aircraft for which full-icing clearance is requested (reference § 29.1419(d)). The approach is much preferred for all programs in order to reduce the scope of any eventual total aircraft icing program effort and to increase the safety level in conducting the rotorcraft natural icing tests. Since at least one rotorcraft has been FAA/AUTHORITY certificated to operate in known icing conditions and others have active development programs to this end, applicants should anticipate eventual full-icing clearance and consider that the engine induction system may be required to operate routinely in a continuous icing environment.

(iv) It is noted in paragraph AC 29.877 that some natural icing tests are required to show compliance with the overall rotorcraft ice protection requirements. It is not required that the engine induction system be evaluated as a part of that natural icing test if adequate verification has been shown by tunnel testing, analysis, or other means to assure satisfactory operation in an extended continuous icing environment. If, however, subsequent rotorcraft natural icing testing shows unanticipated detrimental engine inlet effects, the inlet ice protection system should be reexamined.

(v) The regulation specifies the examination of flight idling conditions. This requirement is normally associated with a low-power letdown at the minimum practical forward airspeed. Alternatively, evaluation of the minimum power and minimum airspeed combination specified in the RFM for operation in visible moisture when below 40° F will accomplish the intent of the idling requirement.

(vi) An acceptable approach to a finding of compliance would be a combination of analysis of the performance of the ice protection system which covers the range of the applicable icing flight envelope (maximum altitude, minimum temperature, etc., of the basic rotorcraft) supported and validated by tests. Ideally, these tests would be conducted in natural atmospheric ice with special instrumentation for droplet size and liquid water content. In practice, however, natural icing testing may pose unacceptably severe problems since rotorcraft may not have the range and speed to reasonably find icing clouds and may not be equipped with the airframe and rotor ice protection needed for safety during the testing.

(vii) Problems with analysis emerge if engine inlets incorporate screens, turning vanes, sideward or upward openings, and edge or lip configurations which deviate from the airfoil shapes assumed in most of the analytical procedures described in current technical literature. The applicant should recognize that if meaningful analytical methods are not available, extensive testing with significant conservatism or possibly design changes may be required. Inlet screens in particular, if not adequately

heated, fall in this category and can only be accepted if shown by very conservative ice testing to not significantly impede airflow to the engine.

(2) Procedures.

(i) Review paragraph AC 29.877, ADS-4, Report No. FAA-RD-77-767, and Advisory Circular 20-73. (The comparative concept described under Item 34 of AC 20-73 is obsolete and should not be considered.) These data provide extensive description and methodology for evaluation of ice protection systems, however, as noted above, these data generally apply to near straight line droplet trajectory with impingement onto conventional airfoil shaped inlets. As such, the applicability of these data to rotorcraft engine inlet ducts is limited and may require extensive adjustment to accommodate the different inflow trajectories and shapes of rotorcraft.

(ii) An analysis, appropriate to the configuration; i.e., heated or unheated impingement surfaces, should be prepared. To be acceptable, this analysis should show the inlet to be adequately protected by heat, or if unheated, to show that the inlet with ice accretions as predicted, will provide adequate airflow to the engine throughout the flight envelope of the rotorcraft.

(A) For heated surfaces, ADS-4 and Report No. FAA-RD-77-76 provide detailed suggestions on heat transfer analysis particularly applicable to bleed air heated inlet lips formed in airfoil shapes. These data are limited in applicability and may not be useful for analyzing engine inlet water droplet trajectories to be expected at low airspeed and high engine airflow. Actual icing tests may be needed to derive the impingement patterns for these conditions.

(1) Acceptability criteria for heated inlet ducts usually require sufficient heat to evaporate the water to be expected in a “continuous maximum” icing cloud and to anti-ice the duct during flight in “intermittent maximum” icing clouds, providing the run-back and refreeze to be expected does not cause additional airflow disruption or damage to the engine. Full-scale inlet icing tests with the engine installed and operating should be conducted to verify the analysis. Engine power changes which may be expected in service should be included in the testing. Wind tunnels equipped for icing tests probably are the most useful means of conducting these tests if natural icing tests are impractical. The rotor downwash effect should be considered to the extent possible by adjusting the inflow angle in the tunnel.

(2) The power loss (bleed air, generator load, etc.) attributable to the heating requirements will affect the performance of the rotorcraft. Normally, this may be accounted for by specifying a gross weight incremental deduction from the flight manual performance data for flight into visible moisture below 40° F.

(3) Special evaluation of the possibility of ice ingestion damage to the engine should be made for heated systems which considers the ice ingestion to be expected when the anti-ice system is actuated after a delay of 1 minute for the pilot to

recognize that the rotorcraft has encountered ice. This time delay may be reduced if the crew is provided adequate distinctive cues to alert them that the rotorcraft has encountered icing conditions.

(B) For unheated inlets, an acceptable method for showing compliance would include an extensive, detailed analysis (which shows that ice accretions on and in the inlet do not obstruct adequate airflow to the engine) and tests as necessary to validate the analysis. The analysis of ice accretion becomes even more questionable since the unheated inlet involves ice buildups which themselves progressively change shape during icing exposure.

(1) Flight testing with an instrumented rotorcraft in natural ice to verify the analysis is desirable; however, wind tunnel tests as discussed above may be used. Since unheated inlets typically continue to accrete ice as a function of exposure, both the analysis and the test should realistically consider the actual exposure to be expected in service. This should not be less than penetration of the continuous maximum icing cloud followed immediately by exposure to the intermittent maximum cloud for rotorcraft not certified for icing. Engine power changes which may be expected in service should be included in the testing, and a warm-up period at the conclusion of the icing exposure should be shown for some selected test points to evaluate potential ice breakaway and ingestion.

(2) For the nonicing certified rotorcraft using the limited icing exposure concept for inlet certification, some conservatism should be applied to account for the fact that inlet icing may occur without airframe icing, and that the escape procedure from this unapproved operating condition is not defined. A demonstration of 30-minute hold capability in the continuous maximum cloud would be acceptable. Alternatively, if positive cues (perhaps a carefully located ice detector) of potential inlet icing are provided to the crew, the time increment could be reduced to recognition plus 15 minutes (15-minute escape time after recognition is consistent with the single ice protection system failure recognition and escape guidance for aircraft ice protection systems in paragraph AC 29.877). It should not be assumed that airframe icing will always be available as a cue to potential inlet icing. The main rotor, for example, may not show icing indications above 25° F, whereas some inlets may ice critically near 32° F ambient. A reduction of the acceptable 30-minute exposure should not be based on observation of ice accretions on protruding components which are likely to be changed. For example, a limited exposure inlet icing program which reduces the inlet icing exposure time based on crew recognition of icing on the windshield wipers may be invalidated at a later date if a new windscreen deletes the wipers.

(iii) Inlet capability during IGE hover in icing conditions has not generally been considered for rotorcraft not certified for icing. Recently, however, the FAA/AUTHORITY is aware that some inlets may ice at zero airspeed near 32° F with no indications of airframe icing in the field of view of the crew. This special concern of operating within RFM limitations, and yet placing the induction system in jeopardy, may be addressed in several ways. If the induction system ice protection scheme is not

dependent on airspeed for proper function, the issue may be addressed by tunnel testing with inlet airflows approximating hover with no particular attention to tunnel windspeed. For protection schemes which may be sensitive to airspeed (external screens have shown this tendency), actual hover demonstration at or near zero speed tunnel conditions may be appropriate. Icing detectors located to indicate induction system icing in hover may be an option to a hover icing protection demonstration. Recently, on an external screened configuration, the FAA/AUTHORITY has accepted a satisfactory IGE hover demonstration of 30 minutes at the critical ambient temperature (i.e., ambient consistent with no airframe icing but potential inlet icing), 0.6 grams/meter^3 LWC and 40 micron droplet size as an adequate response to this concern.

(iv) For aircraft requesting full icing approval, or for those electing to show continuous induction system icing protection, the forward flight icing exposure would not be less than that time required to stabilize any ice accretions observed during repeated cycles of the continuous maximum followed by intermittent maximum cloud exposure. Typically, any ice accretions resulting from these repeated cycles would be expected to stabilize in less than 30 minutes. The 30-minute hold capability in the continuous maximum icing environment could thus be assured without special testing by careful selection of the test points for this repeated cycle.

(v) A rotorcraft requesting full icing approval should also have hover capability in the icing environment. Intermittent maximum icing conditions are not likely to exist near ground level and a satisfactory demonstration could involve the ability to hover indefinitely in the continuous maximum icing environment. Alternatively, carefully worded RFM limitations to restrict hover time may be acceptable if the system is not capable of indefinite exposure. Hover capability verification may not involve zero airspeed demonstration if the inlet protection system is insensitive to rotorcraft airspeed.

(vi) The engine(s) must be installed or protected to avoid engine damage from ice ingestion due to ice accretion in the inlet or on other parts of the rotorcraft, including the rotors, which may break away to enter the inlet. If screens or bypass arrangements are provided for these purposes, they should be included in the icing tests and shown by test or rational analysis to effectively protect the engine.

(vii) For unheated inlets, significant ice accumulations to be expected on the inlet may adversely affect the engine stall margin, acceleration characteristics, duct loss, etc. Dry air flight tests to evaluate these aspects can be accomplished by affixing ice shapes to the inlet. These shapes should closely match the actual ice shapes defined by test or analysis.

c. Turbine Engines - Snow Protection.

(1) Explanation.

(i) Section 29.1093(b)(1)(ii) provides that the turbine engine and its air inlet system operate satisfactorily within the limitations established for the rotorcraft, in both falling and blowing snow. The section does not provide the definition of falling and blowing snow.

(ii) Since the regulation provides for certification "within the limitations established for the rotorcraft," the FAA/AUTHORITY can accept a restriction against snow operations in the limitations section of the RFM in lieu of demonstration of compliance. If no restriction on snow operations appears in the RFM, it is presumed that the aircraft may operate in snow at the pilot's discretion.

(2) Guidance.

(i) The FAA/AUTHORITY has accepted that engine induction system operation in falling and blowing snow can be approved without restriction if normal operations under the following conditions are demonstrated:

Visibility: ¼ mile or less as limited by snow.

Temperature: 25° F to 34° F (28° F to 34° F desired), unless other temperatures are deemed critical.

Operations: Ground operations - 20 minutes
IGE hover - 5 minutes
Level flight - 1 hour
Descent and landing

(ii) Rotorcraft Flight Manual visibility restrictions for falling and blowing snow operations are not appropriate.

(iii) Time limitations, other than possibly for ground and hover operations, are not appropriate.

(iv) Artificially produced snow should not be used as the sole means of showing compliance.

(3) Guidance Rationale.

(i) The test conditions specified--visibility, temperature, and operations--are based on previous certification programs, previous FAA/AUTHORITY guidance, and on research by the FAA technical center and others.

(A) Visibility. The test visibility defined, ¼-mile visibility or less as limited by snow, represents a heavy snowstorm and is the maximum likely to be encountered in service. Rotorcraft which have been certified to the ¼-mile visibility test criteria have not shown engine inlet snow-related service difficulties. It is important to note that the

visibility specified is a test parameter rather than an operational limitation to be imposed on the rotorcraft after the tests are completed.

(B) Temperature.

(1) The ambient temperature specified is conducive to wet snow conditions. Wet snow tends to accumulate on unheated surfaces subject to impingement.

(2) Colder ambients, more conducive to dry snow conditions, may be critical for some induction systems. Colder exterior surfaces may be bypassed, and the snow crystals may stick to partially heated interior surfaces where partial melting and refreezing may occur.

(3) Company development testing or experience with very similar type induction systems may be adequate to determine the critical ambient conditions for certification testing.

(C) Operations.

(1) Ground running, taxiing, and IGE hover operations are generally the most critical since the rotorcraft may be operating in recirculating snow. Twenty-five minutes under these extreme conditions would seem a reasonable maximum, both from the view of pilot stress and the maximum expected taxi time prior to takeoff in bad weather.

(2) One hour of level flight operation under ¼-mile visibility snow conditions should provide ample opportunity for hazardous accumulations to begin to build.

(3) The descent and landing will provide an engine power change, an induction system airflow change, and a variation in the external airflow pattern near the induction system entrance. The initiation of the descent and final flare for landing may also produce additional airframe vibration transmitted to the induction system. These power, airflow, and vibration changes may provide an opportunity for any level flight accumulations to be ingested into the engine. Hazardous accumulations are not acceptable during or after any test phase.

(ii) Visibility may fluctuate rapidly in snowstorms. It is affected by the presence of fog or ice crystals, is not crew measured or controlled, and is difficult to estimate. A visibility operational limitation based on snow, therefore, is not appropriate.

(iii) Since during cruise in snow conditions the aircraft is likely to be in and out of heavy snowfall, it is not practical for the crew to account for the time spent in snow in level flight conditions. Thus, it is not appropriate to include time limitations in the RFM for level flight snow operations.

(iv) A practical ground and IGE hover time limitation of less than 25 minutes in recirculating snow may be considered. The expected action at the expiration of this specified time period would be shut down and inspection of the inlet system or transition to a safe flight condition where demonstration has shown that moisture accumulations will not intensify or shed and cause engine operational problems.

(v) Artificially produced snow is an excellent development tool and has been successfully used to indicate potential problem areas in induction systems. These devices are usually restricted to use for hover and ground evaluations, and the snow pellets produced by these machines are not sufficiently similar to natural snowflakes to justify the use of artificial snow as the sole basis of certification.

(4) Procedures.

(i) Satisfactory demonstration of the test conditions requires that the engine, induction system, and proximate cowling surfaces remain free of excessive snow, ice, or water accumulation. Excessive accumulation is defined as accumulation that may cause engine instability, damage, or significant loss of engine power. If a questionable amount of snow or moisture accumulates in the inlet, the applicant may elect to demonstrate that this amount in the form of snow or water and ice, as appropriate, can be ingested by the engine without incurring surge, flameout, or damage.

(ii) The conditions specified assume actual flight demonstration in natural snow. The ground operations and IGE hover test conditions assume operation in recirculating snow. Blowing snow, resulting from rotor airflow recirculation, can be expected to be more severe than natural blowing snow if the rotorcraft continues to move slowly over freshly fallen snow. Thus, the blowing snow operational capability is usually demonstrated by the taxi and hover operations in recirculating snow.

(iii) For VFR rotorcraft, the airspeeds for the level flight test condition should include the maximum consistent with the visibility conditions. For IFR operations, the airspeed should be the maximum cruise speed or the maximum speed specified for snow operations in the flight manual limitations, unless other airspeeds are deemed more critical. It is recognized that many rotorcraft initially certified VFR are later IFR certified with a resulting possible increase in airspeed in snow conditions. This factor should be considered if IFR certification is anticipated.

(iv) The visibility specified assumes that visual measurements are made in falling snow in the absence of fog or recirculating snow by an observer at the test site outside the tests rotorcraft's area of influence. An accepted equation for relating this measured visibility to snow concentration is $V = 374.9/C^{0.7734}$ where C is the snow concentration (grams/meter^3) and V is the visibility (meters).

(A) This equation can be reasonably applied to all snowflake type classifications and is credited to J.R. Stallabrass, National Research Council of Canada.

(B) Other equations may be applied if they are shown to be accurate for the particular snowflake types for the test program.

(v) The snow concentration corresponding to the visibility prescribed, ¼ mile or less, will be extremely difficult to locate in nature. Data from Ottawa, Canada, research indicate that fewer than 4 percent of the snowstorms encountered there meet the 0.91 grams/m^3 concentration associated with the ¼-mile visibility. Furthermore, the likelihood that the desired concentration will exist for the duration of the testing is even more remote. Because of these testing realities, it is very likely that exact target test conditions will not be achieved. Those involved in certification must exercise good judgment in accepting alternate approaches.

(vi) For some engine induction systems, it may become apparent by inspecting for moisture accumulations that ground and IGE hover operations in recirculating snow are much more severe than the level flight test. In this instance, it is reasonable to accept prolonged IGE operations in recirculating snow and to accept durations of less than 1-hour level flight in ¼-mile or less visibility. Best efforts should be made to assure that at least some level flight time is accomplished at ¼-mile or less visibility to assure that the spectrum is covered.

(vii) It should be determined that the visibility established at the test sight is limited by snow and not by fog or poor lighting (twilight) conditions.

(viii) The concentration of snow approaching the inlet in severe recirculation will far exceed the quantity encountered in the natural snowfall. Recirculation is necessarily a qualitative judgment by the test pilot. The snow concentration at the inlets during recirculation would vary for different rotorcraft types and would be dependent on rotor characteristics, power setting, and inlet location. For test purposes, recirculation should be the highest snow concentration attainable in the maneuver, or that corresponding to the lowest visibility at which (in the pilot's judgment) control of the rotorcraft is possible in the IGE condition. The visibility specification of ¼ mile or less outside of the recirculation influence becomes inconsequential provided that fresh, loose snow is continually experienced during the ground operation and IGE hover testing phase. However, since it is intended that the test phases be accomplished sequentially to assure that transition to takeoff and other transients are considered, the conditions at takeoff, level flight, and descent and landing should approximate the ¼-mile visibility criteria.

d. Turbine Engines - Ground Icing.

(1) Explanation. This requirement addresses the situation where extended ground operation in icing exposes the rotorcraft and its engine inlet to icing (ground fog)

conditions which may have different droplet impingement patterns and involve different and/or less effective means of ice protection. Note that the requirement is effective at Amendment 10 and is applicable regardless of any desire to prohibit dispatch into known icing conditions.

(2) Procedure. Since this condition assumes zero airspeed, wind tunnel testing may be inappropriate unless conservative extrapolation of low speed tunnel data can be determined to be valid. For protection schemes which are dependent primarily on airspeed for proper functions (external screens have shown this tendency), it may be necessary to verify adequate ground operation protection capability by very low speed tunnels or by the use of outside facilities such as the Canadian National Research Council's spray rig at Ottawa, Canada. For heated systems or for internal bypass schemes, tunnel speed may not be important, and adequate demonstration may be accomplished at higher tunnel speeds provided that internal inlet airflows and heat available are properly considered. Testing should proximate the regulatory test conditions and be continued for 30 minutes using engine power and control manipulation as normally accepted during taxiway operations, followed by an acceleration to takeoff power. The test time may be shortened if de-ice/anti-ice protection is adequate or if stabilization of ice build-up is affirmed. The induction system should be in condition for safe flight at the conclusion of the test.

AC 29.1093A. § 29.1093 (Amendment 29-26) INDUCTION SYSTEM ICING PROTECTION.

a. Explanation. Amendment 29-26 clarifies that the phrase, "within the limitations established for the rotorcraft" applies only to the requirement in § 29.1093(b)(1)(ii) for demonstrating flight in falling and blowing snow.

b. Procedures. All of the policy material for this section remains in effect with the update that turbine engines and turbine engine inlets should perform satisfactorily in atmospheric icing conditions defined in Appendix C of FAR 29 instead of FAR 25. In addition to paragraph AC 29.1093, the following procedures should be followed:

(1) A "serious loss of power" in this section has been interpreted to be any power loss that requires immediate pilot action. In addition, the term "adverse effect on engine operation" in § 29.1093(b)(1)(ii) has been interpreted to be an effect that would prevent the engine from achieving rated aircraft flight manual performance (takeoff/climb/etc.). This term also includes effects on the engine induction system characteristics to an acceptable level established by the engine manufacturer (inlet distortion, etc.).

(2) It should be shown that rotorcraft that are prohibited from flight into falling and blowing snow can exit inadvertent entrance into those conditions without adverse effect upon the operating characteristics of the engine or the rotorcraft.

(3) For full flight capability into snow, both falling and blowing, it should be shown that each engine, and its inlet system, will operate satisfactorily throughout the flight power range of the engine and the operating limitations of the rotorcraft. It should be shown that any build-up or accumulation of snow will not reduce or block the flow of inlet air to the engine. Any accumulations that become dislodged should not affect engine operation.

AC 29.1101. § 29.1101 CARBURETOR AIR PREHEATER DESIGN.

a. Explanation. Each carburetor air preheater must be designed and constructed to:

(1) Ensure ventilation of the preheater when the engine is operated in cold air.

(2) Allow inspection of the exhaust manifold that it surrounds.

(3) Allow inspection of critical parts of the preheater itself.

b. Procedures. Although carburetors of some design and fuel injections are free from icing difficulties, the most common remedy is to preheat the air supply entering the carburetor. In this way, sufficient heat is added to replace the heat lost due to vaporization of fuel, and the mixing chamber temperature cannot drop to the freezing point of water. The air preheater is essentially a tube or jacket through which the exhaust of one or more cylinders is passed with the air flowing over the heated surface raised to the required temperature before entering the carburetor. A control for adjusting the preheater valve is installed in the cockpit so that heat may be applied only when actually required to prevent ice formation.

AC 29.1103. § 29.1103 (Amendment 29-17) INDUCTION SYSTEM DUCTS AND AIR DUCT SYSTEMS.

a. § 29.1103(a):

(1) Explanation. This paragraph is intended to require the design of induction system ducts for engines and auxiliary power units to include fuel and water drains which are effective in the ground attitude and do not discharge into any location where the fuel drainage could be ignited to cause a fire hazard.

(2) Procedures. Determine that each induction duct is provided with at least one drain of sufficient size to minimize clogging and located at the low point of the duct with the rotorcraft in the ground attitude. Discharge from the drain should not create a hazard to the rotorcraft.

b. § 29.1130(b):

(1) Explanation. This paragraph applies to reciprocating engines and is intended to require the induction system to withstand the stresses of explosive backfire which must be expected in these engines.

(2) Procedures. The magnitude of the backfire to be considered is somewhat subjective; however, the rule can generally be satisfied by testing which involves inducing actual backfires in the engine. This can usually be accomplished by crossing ignition leads between cylinders to cause ignition when the intake valve is open. Tests should include both engine cranking and power-on regimes.

c. § 29.1103(c):

(1) Explanation. Induction ducts, particularly on reciprocating engines, involve connections with other ducts and with structure. Flexibility is required to prevent relative motion (expansion, structural deflections, etc.) from prestressing the duct.

(2) Procedures. Review the design for long runs of ducting between the engine and structural supports and between other connections or supports in the duct system. Short segments of the duct constructed of bellows will usually provide the necessary flexibility.

d. § 29.1103(d):

(1) Explanation. The effectiveness of fire extinguisher systems is based, in part, on testing for agent concentration in the fire zone with the airflows to be expected. Any duct failure (burnout) during an engine compartment fire may be expected to introduce air to dilute the agent concentration, or if the duct passes through a firewall, duct burnout could result in an opening in the firewall. Fireproof ducts, as specified by this rule, are needed to ensure the integrity of the firewalls and the effectiveness of the fire extinguisher system. Fire resistant ducts may be used if located totally within the fire zone.

(2) Procedures. Ducts within a fire zone are usually engine air induction ducts, air bypass ducts, or cooling air ducts. For ducts which penetrate the firewall or other fireproof construction such as fireproof cowling, verify that the duct is of fireproof construction. Other ducts may be only fire resistant. A duct constructed of material which has been accepted as firewall material would be considered as fireproof without further testing (unless the duct is subject to significant structural loads, in which case, fire testing may be necessary with the loads applied to the duct). The tests for “fireproof” and “fire resistant” qualification differ only in the time exposure; i.e., 15 minutes for “fireproof” and 5 minutes for “fire resistant.” If nonmetallics are used in duct construction intended for “fireproof” applications and the integrity of the test specimen is deteriorating towards the end of the 15-minute fire test period, assessment of the situation with respect to possible hazards if the engine fire were to exist beyond 15 minutes is appropriate. Duct burnout should not result in the possibility that fire could escape the fire zone and create hazardous conditions.

e. § 29.1103(e):

(1) Explanation. This rule requires additional fireproofing of the inlet duct of auxiliary power units (APU's) to ensure safe disposal or containment of hot gas reverse flow from the APU from entering any other compartment of the rotorcraft in which a hazard would be created. This rule could, in some designs, require fireproof construction of the inlet duct for the APU to extend upstream beyond the confines of the firewall provided in compliance with § 29.1191(b). The extent of the fireproofing is subjective and may require malfunction testing if no applicable information can be provided by the manufacturer of the APU. For ducting upstream of the fireproof section, materials selected need not be qualified for fire impingement; however, they must be shown to be suitable for the maximum normal heat conditions to be expected.

(2) Procedures. Normally, fireproof ducting upstream of the APU to the contour of the rotorcraft is acceptable for compliance. However, if this distance is less than 36 inches, the possibility of impingement of hot gases on the contour skin of the rotorcraft is required. Fireproofing of contour skin or duct relocation should be considered if the impingement area is a nonmetallic structure or is part of or close to fuel tanks. Other system air inlets in the impingement area should also be evaluated for possible hazards due to ingestion of hot gases in event of reverse flow from the APU.

f. § 29.1103(f):

(1) Explanation. APU inlet ducts subject to reverse flow of hot gases should be constructed of materials that will not absorb fuel or other flammable liquids to avoid induction duct inlet fires which may ignite by backfires or reverse flow from an APU.

(2) Procedures. Any nonmetallic duct material should be shown by test or by previous qualification to be sealed or otherwise free of tendencies to absorb flammable liquids. Tests, if necessary, should follow the guidelines for absorption qualification set forth in TSO's or military specifications for fuel and oil tanks.

AC 29.1105. § 29.1105 INDUCTION SYSTEM SCREENS.

a. Explanation. This paragraph concerns reciprocating engine installations. If induction system screens are used, the following considerations apply.

(1) Each screen must be upstream of the carburetor.

(2) No screen may be in any part of the induction system that is the only passage through which air can reach the engine unless it can be deiced by heated air.

(3) No screen may be deiced by alcohol alone, and it must be impossible for fuel to strike any screen.

b. Procedures. Inlet screens in the engine induction system are generally provided to prevent the entrance of foreign objects. The induction design may incorporate features which address the concerns identified above. Also, some designs incorporate an alternate air door which, with appropriate consideration, accounts for the requirements of this paragraph. The alternate air source should provide the required air to maintain flight and landing to a suitable landing site at appropriate airspeeds and gross weights.

AC 29.1107. § 29.1107 INTERCOOLERS AND AFTER-COOLERS.

a. Explanation. Each intercooler and after-cooler must be able to withstand the vibration, inertia, and air pressure loads to which it would be subjected in operation.

b. Procedures. In complying with this regulation, the various vibrations, inertia, and air pressure loads should be identified. The installation may be verified by either analysis or test appropriate for the design.

AC 29.1109. § 29.1109 CARBURETOR AIR COOLING.

a. Explanation. It must be shown under § 29.1043 that each installation using two-stage superchargers has means to maintain the air temperature at the carburetor inlet, at or below the maximum established value.

b. Procedures. When the powerplant installation design utilizes a supercharger installation, it should be shown by testing that the air temperature at the carburetor inlet does not exceed established values.

SUBPART E - POWERPLANT

EXHAUST SYSTEM

AC 29.1121. § 29.1121 (Amendment 29-13) EXHAUST SYSTEM - GENERAL.

a. Explanation.

(1) This section addresses the arrangement of exhaust components and the protection against hazardous conditions which exist with hot exhaust gases for powerplant and auxiliary power unit installations.

(2) The objective is to ensure safe disposal of exhaust gases without fire hazard or physical impairment to any occupant.

b. Procedures.

(1) During the certification process, carbon monoxide levels should be monitored in the personnel compartments to verify that the gas levels are well within the acceptable range. The conditions under which the measurements are taken should be representative of the normal operating limitations of the rotorcraft. This paragraph is not applicable to gas turbine-engine-powered rotorcraft.

(2) Exhaust system surfaces hot enough to ignite flammable fluids or vapors must meet the isolation or shielding requirements of this section in addition to the requirements of §§ 29.1183 and 29.1185. Good design practice suggests that the isolation and shielding features incorporated would continue to be effective under the emergency landing conditions specified in § 29.561.

(3) Compliance with the § 29.1121(c) fireproof requirements can be accomplished by demonstrating that the material or component will withstand a 2000° F ± 50° F flame for 15 minutes while still fulfilling its design purpose. This testing should accurately simulate, as near as practicable, the operating environment of the material or component in service. In addition to the fireproof requirements, the requirements of § 29.1191 must be met.

(4) Compliance with § 29.1121(d) can be accomplished by locating the vents and drains where fumes and fluids cannot interact with the hot exhaust gases. Drains should discharge positively and be a minimum of 0.25 inches in diameter. No drain may discharge where it will cause a fire hazard. This can be demonstrated by discharging a colored liquid through the drain system in flight and on the ground. The dye should not impinge on any ignition source.

(5) It should be demonstrated that exhaust gases are discharged in such a manner that they do not cause distortion or glare seriously affecting the pilot’s visibility

at night. One method of compliance would be a night flight evaluation at critical azimuth and variable wind conditions to verify that no degradation exists.

(6) Hot spots that can occur on exhaust system components should be eliminated by providing deflectors and/or adequate ventilation. Exhaust shrouds can either be ventilated or insulated to keep the temperatures low enough so that ignition of flammable vapors or fluids cannot occur under normal operation or under the emergency landing conditions specified in § 29.561.

(7) Compliance with § 29.1121(h) can be accomplished by ensuring that the drain will not discharge where it might cause a fire hazard. This can be demonstrated by discharging a colored liquid through the drain system in flight and on the ground. The dye should not impinge on any ignition source.

AC 29.1123. § 29.1123 EXHAUST PIPING.

a. Explanation. This section contains the following requirements that must be met for proper certification of exhaust piping on engines, auxiliary propulsion units (APU), and other similar devices.

(1) § 29.1123(a) requires that the piping be heat and corrosion resistant so that it performs its intended function during its operational life (either the life of the rotorcraft or a specified limited life) without significant metal corrosion, metal erosion, or creation of hazardous hot spots. The piping system should be designed, have an installation design, or a combination that allows performance of its function without thermal expansion (thermal strain) induced structural failures, such as ruptures caused by operating temperature excursions and by overpressurization during its operational life.

(2) § 29.1123(b) requires that the piping must be supported to withstand the vibration and loading environment (including inertia loads) to which it will be subjected in service.

(3) § 29.1123(c) requires that piping that connects to components between which relative motion exists in service must have the necessary flexibility and structural integrity to withstand the relative motion without exceeding limit load (at the maximum operating temperature) of the piping, or creating unintended loads (or load paths) on the components to which the piping connects.

b. Procedures. Exhaust piping is typically certified by analysis and installation tests conducted during the basic certification process, including flight tests, as follows:

(1) For compliance with § 29.1123(a), because of its durability in the hot exhaust environment, exhaust piping is typically made from stainless steel or alloy steel of the appropriate structurally and thermally derived wall thickness. Hot aircraft exhaust gases are very corrosive; thus, proper material selection and corrosion protective design should be performed and validated during certification. Advisory Circular

(AC) 43-4, “Corrosion Control For Aircraft” contains a detailed discussion of exhaust gas corrosion problems. Analysis and/or verification tests of the exhaust system should be conducted. This work is necessary to ensure thermal and structural integrity; to ensure that thermal expansion does not cause a structural overload or failure; and, to ensure that exhaust piping does not contact (or come close to) ambient temperature materials (such as structure or system components). Hot exhaust piping in contact with (or close to) ambient temperature materials can either create a fire hazard or cause an unintended strength reduction. To ensure that thermal expansion analyses and tests are properly conducted, the maximum in-service temperature excursion should be properly defined. The maximum temperature excursion should be based on the maximum temperature of the piping and exhaust gases, as affected by the insulatory characteristics of the piping’s enclosure, and as affected by a worst case hot day. The worst case temperature environment used for analysis can be verified by a temperature survey. If run on cooler days, the survey can be adjusted for the worst case hot day environment using methods identical to those used for engine cooling tests (reference paragraph AC 29.1043, Cooling Tests). The piping should be designed to expand freely so that thermal expansion (thermal strain) induced loads on the piping and its restraint system are minimized. If thermal expansion induced loads (in conjunction with deflection induced loads and exhaust flow loads, discussed in b(4)) are significant relative to limit load of any item in the load path, then a fatigue check on the critical design point(s) should be performed. The fatigue check should establish a safe life or an approved limited life for the critical component(s) in the system. An accurate analytical fatigue check on exhaust piping may be difficult to perform because of erosion, corrosion, etc., in service; therefore, phased inspections should be considered to ensure the exhaust piping’s continued airworthiness.

(2) For compliance with § 29.1123(b), exhaust piping should be properly supported so that the maximum loads anticipated in-service are properly distributed and reacted, and, as previously discussed, so that thermal expansion induced loading is minimized. Typically the worst case static design load conditions are either the inertia loads from an emergency impact (reference § 29.561) or the combined loading from thermal expansion, in-flight deflections and internal exhaust gas flow (See paragraph b(4)). It should be noted that several combinations of these loads should be examined to determine the critical combination. The piping should be supported and restrained such that critical frequencies are avoided and the induced vibration environment’s effect is minimized. Flight test vibration surveys may be necessary, in some cases, to properly define or validate the critical modes and environment and their effect on the exhaust piping design. Operating modes such as ground idle, flight idle, 40 percent and 80 percent of maximum continuous power, maximum continuous power, OEI power settings and other power settings should be investigated to determine their vibratory effect on the exhaust gas piping system. The strength reduction of the piping materials at operating temperature (and at worst case temperature) should be properly considered in the design and structural substantiation. MIL-HDBK-5D contains material allowables versus temperature data for a wide variety of metallic engineering materials.

(3) For compliance with § 29.1123(c), the piping and its restraint system should be designed to minimize loading induced on the piping by the relative motion (in-service deflections) of the components to which the system attaches. Isolation of significant deflection induced loading (if required based on analysis and strain surveys) by use of flexible joints or other equivalent devices or designs should be considered. Any such in-line device used to reduce deflection loading should be fireproof and leak free when performing its intended function.

(4) For critical load case determination, the expansion-induced thermal loading should be added in with mechanical relative-motion induced loads and internal exhaust gas flow loads to provide total critical loads for both a proper static and a proper fatigue structural substantiation. The critical combined static load should be compared with the emergency impact loads of § 29.561(paragraph b(2)) to determine the critical design load case for static strength substantiation.

(5) It should be noted that the majority of the exhaust piping verification testing required for certification can be accomplished during the rotor drive system tie down testing of § 29.923.

AC 29.1125. § 29.1125 (Amendment 29-12) EXHAUST HEAT EXCHANGERS.

a. Explanation. This section applies only to rotorcraft powered by reciprocating engine(s) or equipped with reciprocating auxiliary propulsion units (APU). This regulation states the certification requirements for exhaust heat exchangers (EHE's) which are summarized as follows:

(1) § 29.1125(a) requires that each EHE be constructed and installed to withstand vibration, inertia and other operational loads.

(2) § 29.1125(a)(1) requires that each EHE be able to operate continuously at the highest anticipation service temperature.

(3) § 29.1125(a)(1) requires that each EHE be corrosion resistant to exhaust gases and other corrosion sources.

(4) § 29.1125(a)(2) requires that each EHE have provisions for inspecting its critical parts and areas.

(5) § 29.1125(a)(3) requires that each EHE have cooling provisions where it is subjected to hot exhaust gases.

(6) § 29.1125(a)(4) requires that each EHE muff design eliminate stagnation areas or liquid traps that would contribute to ignition of leaked flammable fluids.

(7) § 29.1125(b) requires that each EHE used to heat ventilating air for occupants--

(i) Either have a secondary heat exchanger between the primary EHE and the ventilating air system; or

(ii) Have other equivalent means to prevent harmful contamination of ventilating air.

b. Procedures. EHE's and their installations are typically certified by analysis and installation tests conducted during the basic certification process, including flight tests or simulated flight tests, as follows:

(1) Because of their durability in the hot exhaust environment, EHE's are usually constructed from stainless steel or alloy steel of the appropriate structurally and thermally derived wall thickness. The EHE and its system should be designed to expand freely to minimize thermal expansion (thermal strain) induced loads on the EHE and its restraint system. If thermal expansion induced loads (in conjunction with deflection induced loads and exhaust flow loads) are significant relative to the limit load of the EHE or its attachments, a fatigue check on critical design point(s) should be performed. The fatigue check should establish a safe life or an approved limited life for the critical component(s) in the EHE system.

(2) EHE's should be properly supported so that the maximum loads anticipated in service are properly distributed and reacted and so that thermal-expansion-induced loading is minimized. Typically, the worst-case static design load conditions are either the emergency impact loads acting alone (reference § 29.561), or the critical combination of loads from thermal expansion, in-flight deflections and internal exhaust gas flow. Several combinations of these loads should be examined to determine the critical combination. The EHE should be supported and restrained so that critical frequencies are avoided and the induced vibration environment is minimized. Flight tests or bench tests, such as vibration surveys conducted during rotor system endurance testing, may be necessary in some cases, to properly define or validate the vibration environment and EHE's critical modes and their effect on EHE design. Operating modes such as ground idle, flight idle, 40 percent and 80 percent of maximum continuous power, maximum continuous power, OEI power settings, and other critical power settings should be investigated to determine their vibratory effect on the EHE system. The strength reduction of EHE materials at operating temperature and at critical temperatures should be properly considered in EHE design and structural substantiation (MIL-HDBK-5D contains material allowables versus temperature data for a wide variety of metallic engineering materials). The EHE and its restraint system should be designed to minimize loads induced by the relative motion (in-service deflections) of the components to which the EHE attaches. Isolation of significant-deflection-induced loading (as required, based on analysis and strain surveys) by use of flexible joints, other equivalent flexible devices, or designs should be considered. Any such in-line device used to reduce deflection loading should meet applicable certification requirements and be leak-free.

(3) Expansion analysis and verification tests of the EHE should be conducted to ensure its thermal (and structural) integrity and to ensure that thermal expansion does not cause the EHE to contact (or come close to) ambient temperature aircraft materials, structure or system components and either create a fire hazard or an unintended reduction in strength. To ensure that expansion analyses and tests are properly conducted, the maximum in-service temperature excursion should be properly defined. The maximum temperature excursion should be based on the maximum temperatures of the EHE and exhaust gases, as affected by the insulatory characteristics of the EHE's enclosure, and as affected by a worst-case hot day. The worst-case temperature environment used for analysis can be verified by a temperature survey which, when run on cooler days, can be adjusted to the worst-case hot day environment using methods identical to those used for engine cooling tests (reference paragraph AC 29.1043, Cooling Tests).

(4) Hot aircraft exhaust gases are very corrosive; thus, proper material selection and corrosion protection design should be performed and validated during certification. Advisory Circular (AC) 43-4, "Corrosion Control For Aircraft" contains a detailed discussion of exhaust gas corrosion problems. The in-service corrosive environment should be identified and characterized as thoroughly as possible by chemical analysis, tests and service experience. Once defined, appropriate design techniques and materials should be selected. Certification tests may be required to ensure proper substantiation. Phased inspections and inspectability should be considered (reference (4)).

(5) The EHE's design should be reviewed for inspectability to ensure that structural and thermal integrity is maintained over the intended life of the EHE. Also, if the design review is not conclusive relative to inspectability, a tear down inspection should be conducted.

(6) Each EHE design should be reviewed, analyzed, and tested to ensure that cooling provisions are adequate where EHE surfaces are subjected to hot exhaust gases. This is necessary to prevent hazardous hot spots or a burn through which may cause a fire and contaminate the occupied environment.

(7) Each EHE design should be reviewed, analyzed, and tested to ensure that stagnation areas and liquid traps do not exist. This can be done using bench flow tests. These stagnant areas and traps could become ignition sources if wetted with a leaking flammable fluid. A review of potential leaking flammable fluid hazards should be conducted and appropriate preventative measures such as drains and drip fences installed to ensure they are routed away from EHE's.

(8) Each EHE design which will be used to heat ventilating air for occupants should be reviewed to ensure that the EHE is a double walled system, (i.e., it would require failure of two EHE surfaces to allow toxic exhaust gases to intermix with cabin ventilating air). Each EHE wall should be designed with equal thermal and structural resistance since a single undetected inner wall failure would subject the outer wall to

the primary heat load. Also, inspectability provisions should be provided or means identified to ensure that inner wall failures can be detected in service. Any equivalent means which is applied for must clearly provide an equivalent level of safety to a double walled EHE.

SUBPART E - POWERPLANT

POWERPLANT CONTROLS AND ACCESSORIES

AC 29.1141. §. 29.1141 (Amendment 29-13) POWERPLANT CONTROLS: GENERAL.

a. Explanation.

(1) Section 29.1141(a) References §§ 29.777 and 29.1555. The detailed compliance procedures for powerplant control arrangement and markings are found in these sections.

(2) Section 29.1141(b) requires that controls be located and/or shielded such that normal movement of cockpit personnel will not cause inadvertent control movements.

(3) Section 29.1141(c) requires that each flexible control (push-pull cables) be properly approved.

(4) Section 29.1141(d) requires that each control maintain its set position without movement from an inadvertent source such as vibration or control system loads. This is required so that constant flightcrew attention is not necessary.

(5) Section 29.1141(e) requires that each control be able to withstand operating loads without excessive deflection. Excessive deflection is interpreted to be that deflection that would cause erratic movement, lack of crispness, or premature failure.

(6) Section 29.1141(f) specifies acceptable open/close positions for manual valves to prevent power failure due to improper control valve positioning. Power-assisted valves should have means to indicate to the flightcrew that the valve is either in the fully open or fully closed position or that the valve is moving between these two positions.

(7) The control system is subject to evaluation under § 29.901(c); i.e., for turbine installations, no single failure or malfunction, or probable combination thereof, of any powerplant control system should cause the failure of any powerplant function necessary for safety. One acceptable way to determine this is by use of a failure modes and effects analysis (FMEA).

b. Procedures.

(1) For compliance with § 29.1141(a), review the procedures for paragraph AC 29.1555. Evaluation by the flight test pilot during the official flight test program is appropriate.

(2) Compliance with § 29.1141(b) is normally evaluated during the flight test program and documented in the flight test report.

(3) Compliance with § 29.1141(c) may be accomplished by qualifying the control to MIL-C-7958, “Controls, Push-Pull, Flexible, and Rigid,” or other approved standards or by previous approval in a similar function, installation, or arrangement.

(4) Compliance with § 29.1141(d) may be shown during the flight test program by monitoring the means to prevent control creep. This device or arrangement should be effective without crew attention and should not impose undue control displacement loads or interfere with accurate settings.

(5) Compliance with § 29.1141(e) may be shown by an appropriate structural analysis and/or a witnessed static load test using the factors specified under § 29.397 unless a lower value can be shown to be applicable. Operation tests and design details described in §§ 29.683 and 29.685 should also be considered.

(6) Compliance with § 29.1141(f)(1) may be accomplished by installing manual valves which have positive stops in the fully open and closed positions. The fuel valves, however, may have an arrangement to facilitate the capability of switching to different fuel tanks if suitable indexing is provided. Compliance with § 29.1141(f)(2) may be accomplished by installing a device which displays to the flightcrew one indication with valve fully open and another with the valve fully closed. Alternatively, an indication could be given when the valve is moving from fully open to fully closed with the indication ceasing when the valve position corresponds to the selected switch position (open or closed). An example would be a light that is “off” when the valve is fully open or fully closed and illuminates while the valve is transitioning.

AC 29.1142. <u>§ 29.1142 (Amendment 29.17) AUXILIARY POWER UNIT CONTROLS</u>.

a. <u>Explanation</u>.

(1) This section addresses control requirements for any APU installed in a rotorcraft.

(2) The requirement for starting, stopping, and emergency shutdown of the APU from the flight deck is primarily to control APU operation in the event of improper operation or malfunction which could affect the safety of the aircraft.

b. <u>Procedure</u>.

(1) The requirements of this section apply to all APU installations in rotorcraft without regard to whether or not the APU is to be operated on the ground only, or operated in flight and on the ground.

(2) The APU installation must provide sufficient controls to the flight crew to enable them to control the operation of the APU under normal and emergency conditions.

(3) Compliance can be shown by both demonstration and a failure analysis.

AC 29.1143. § 29.1143 (Amendment 29-12) ENGINE CONTROLS.

a. Explanation. This section prescribes safety standards applicable to arrangement and operation of the engine controls.

(1) Section 29.1143(a) requires a separate throttle for each engine.

(2) Section 29.1143(b) requires a throttle arrangement for control of all engines be achieved by:

(i) Separate control of each engine.

(ii) Simultaneous control of all engines.

(3) Section 29.1143(c) requires that immediate actuation at the engine control should be provided by any given input at the cockpit throttle control.

(4) Section 29.1143(d) requires that each fluid injection system control (e.g., water-alcohol) other than the fuel system control must reside in the throttle controls. This does not preclude the injection system pump from having a control located separately from the throttle.

(5) Section 29.1143(e) requires that power or thrust controls (that have fuel shut-off features) provide a means to prevent inadvertent movement to the shut-off position. This means should--

(i) Provide a positive lock or stop at the idle position; and

(ii) Require a separate and distinct operation to place the control in the shut-off position.

b. Procedures.

(1) Certification data submitted by the applicant should be reviewed to ensure that all the design features stated in § 29.1143 exist.

(2) Proper engine control functioning (to verify the design features of § 29.1143) should be verified as part of the type inspection authorization (TIA) for the certification project.

(3) Compliance with § 29.1143(e)(1) has been shown successfully in the past by use of idle detents (mechanical or electrical/mechanical such as a solenoid).

(4) In the past, compliance with § 29.1143(e)(ii) has been achieved by use of a switch or button to displace the idle stop or by use of distinct offsets in throttle motion to allow movement from the idle stop to shutoff.

AC 29.1143A. § 29.1143 (Amendment 29-26) ENGINE CONTROLS.

a. Explanation. Amendment 29–26 revises § 29.1143 by replacing the terms “throttle control” and “thrust control” with the more general term “power control.” The changes should preclude misconceptions regarding engine control arrangements when governor-controlled turboshaft engines are employed in rotorcraft.

b. Procedures. The means of compliance for this section is unchanged.

AC 29.1143B. § 29.1143 (Amendment 29-34) ENGINE CONTROLS.

a. Explanation. Amendment 29-34 introduced the option of using 30-second/2-minute OEI power ratings to multiengine rotorcraft. This amendment revises § 29.1143 by adding the requirement for automatic control of 30-second OEI limits in the new § 29.1143(e). Automatic control of the 30-second OEI limits are required to prevent exceedances of the remaining power sections after the precautionary shutdown of one engine. The use of 30-second OEI power must be limited to emergency use only during flight conditions where one engine has failed or has been shutdown for precautionary reasons. During this critical stage of flight crew attention should not be focused on powerplant instruments to avoid limit exceedances.

b. Procedures. The automatic controls used to prevent 30-second OEI limit exceedances can be installed on the airframe or the engine. The applicant should demonstrate that 30-second OEI limits that can affect the continued safe operation of the drive system or engine such as gas generator speed, measured gas temperature, torque, etc., cannot be exceeded. It should also be shown that these devices do not restrict the ability to achieve the full 30-second OEI limits. The operation of these limit devices can be demonstrated on the aircraft or if possible by using bench tests.

AC 29.1145. § 29.1145 (Amendment 29-13) IGNITION SWITCHES.

a. Explanation.

(1) This section addresses the arrangement and protection of ignition switches for reciprocating engines or for turbine engines which require continuous ignition.

(2) The objective is to provide a means to shut off all ignition quickly, if required, while at the same time providing protection against inadvertent ignition switch operation.

(3) Section 29.1145(b) does not specifically state that turbine engines not requiring continuous ignition are excluded from the rule, but no benefit is realized by the capability of shutting off all ignition to these engines.

b. Procedures.

(1) Section 29.1145(b) is self-explanatory in specifying that a means be available to shut off all ignition quickly by the grouping of switches or by a master ignition switch control. A “T” arrangement or split rocker switches are possible configurations. A master ignition control, if utilized, would need to be carefully evaluated if rotorcraft performance credit is given for engine isolation.

(2) Each group of ignition switches and the master ignition control should have a means to prevent inadvertent operation. “Guarded” switches are the usual means of showing compliance.

AC 29.1147. § 29.1147 MIXTURE CONTROLS.

a. Explanation. This section addresses the arrangement of fuel mixture controls, if installed. Major manual adjustment of the fuel mixture to optimize performance is not normally allowed due to the possibility of engine failure or detonation if significant misadjustment occurs. If “best-power” with respect to fuel mixture is desired, normal practice is to utilize engines with automatic mixture controls, in which case the lever in the cockpit reverts to merely an engine shutdown device. In any case, manual adjustment of the mixture, except for intentional shutdown, should not be prescribed without positive means of ascertaining that the resulting fuel-air mixture is within the range associated with safe engine operation. Some manual mixture adjustment may be acceptable for more efficient engine operation if suitable stops or automatic means are provided to prevent inadvertent engine shutdown with mixture movement or engine malfunction with flight condition changes.

(1) Section 29.1147(a) requires (if mixture controls exist) that controls be arranged to allow:

(i) Separate control of each engine.

(ii) Simultaneous control of all engines.

(2) Section 29.1147(b) requires that each intermediate position of the mixture controls corresponding to a normal operating setting be identifiable by both feel and sight.

b. Procedures.

(1) Certification data submitted by the applicant should be reviewed to ensure that the design features stated in § 29.1147 exist.

(2) Proper mixture control functioning (to verify the design features of § 29.1147) should be verified as part of the TIA for the certification project.

(3) Compliance is typically shown by use of a side-by-side arrangement of the controls, provided that the arrangement is compatible with other controls and considering that crew attention to the primary flight controls may be a full-time, “hands-on” operation.

AC 29.1151. § 29.1151 ROTOR BRAKE CONTROLS.

a. Explanation.

(1) Paragraph (a) of § 29.1151 is intended to require design features which, for all practicable purposes, prevent brake application in flight even under conditions of reasonably expected crew error or confusion.

(2) Paragraph (b) of § 29.1151 would require warning devices to alert the crew if the brake has not been completely released.

b. Background. Inadvertent or undetected application of the rotor brake is expected to result in excessive heat and fire in the rotor brake area. Rotor brake components are usually located integral with, or in close proximity to, rotor drive system components and, in many cases, close to critical hydraulic main rotor control system components. Fires in these areas would be extremely hazardous.

c. Methods of Compliance.

(1) For paragraph (a) literal compliance can be achieved by lock-out devices sensitive to the higher RPM. ranges of the main rotor or other flight parameters, hydraulic bypass or lockout devices controlled by flyweight governor systems, etc. The guard required by § 29.921 does not, in itself, provide compliance with this requirement. For some designs, if careful evaluation of the overall control, including location, guard mechanism, control manipulation requirements, accessibility, etc., provides an extremely high degree of assurance that inadvertent application will not occur, compliance may be assumed. Also, if brake application does occur, annunciation appears, and no immediate hazard to flight operation exists, compliance may be assumed.

(2) Warning devices supplied to comply with this rule should provide a signal at any time the rotor brake is engaged, including partial engagement. Typically,

micro-switches installed to close a circuit to a cockpit warning (red) light when the brake puck moves out of the retract position will provide compliance, provided the designer gives full consideration to the vibration, temperature, moisture, and other environmental considerations appropriate to configuration. Other methods such as system pressure switches, brake handle position indicators, etc., may not provide the warning required by this rule.

AC 29.1157. § 29.1157 CARBURETOR AIR TEMPERATURE CONTROLS.

a. Explanation.

(1) This section addresses the air temperature control for carburetor equipped reciprocating engines.

(2) For rotorcraft which have more than one such engine installed, a separate carburetor air temperature control must be provided for each engine.

b. Procedure.

(1) The engine air induction system should incorporate a means for the prevention and elimination of ice accumulations by preheating the air prior to its entry into the carburetor.

(2) Manually operated push/pull systems have been used which operate a flapper valve inside the air induction system. One such system for each engine is one method of compliance.

AC 29.1159. § 29.1159 SUPERCHARGER CONTROLS.

a. Explanation.

(1) This section addresses the accessibility to supercharger controls in the cockpit, if installed.

(2) These controls must be located so they are easily reached by the pilots or, if the rotorcraft is so configured, by a flight engineer.

b. Procedure.

(1) The location and shape of the controls should be conveniently accessible and sufficiently unique to preclude inadvertent actuation of the wrong control.

(2) Compliance is typically shown by a cockpit evaluation.

AC 29.1163. § 29.1163 (Amendment 29-26) POWERPLANT ACCESSORIES.

a. Explanation.

(1) This section addresses the interface requirements for powerplant accessories which are mounted on the engine or rotor drive system components.

(2) Areas which should be addressed include structural loads imposed upon the engine case and isolation between the accessory and engine oil systems. Electrical equipment isolation from flammable fluids or vapors should be addressed as well as the effect of an accessory failure on the continued operation of the engine and drive system components.

b. Procedures.

(1) Accessories installed and certified by the engine manufacturer can be mounted on the engine without additional justification.

(2) Any accessory to be mounted on the engine, which was not certificated with the engine and does not meet the engine installation design manual requirements, should have a structural analysis showing the mounting of that accessory on the engine will not induce loads into the engine case which are higher than the original design loads.

(3) When the accessory is mounted and operating on the engine, it should not be possible to contaminate either the engine or accessory oil systems. This contamination can take the form of debris following a failure, airborne dirt or water, or any other substance that would impair proper operation of the engine or accessory. Compliance with these requirements can be accomplished by a combination of test and analysis. The design interface should be such that when the equipment is operating, there are no high/low pressure differentials between the components which would induce fluid transfer between components resulting in a low fluid level in one component and an overfill condition in the other component. Where this potential exists, an analysis and/or test should be used to demonstrate compliance.

(4) Engine mounted accessories which are subject to arcing and sparking must be isolated from all flammable fluids or vapors to minimize the probability of fire. This can be accomplished by isolating the electrical equipment from the flammable fumes or vapors or by isolating the flammable fumes or vapors from the potential ignition source. Compliance can be shown by analysis.

(5) A failure mode and effect analysis should be submitted which shows that a failure of any engine mounted and driven accessory will not interfere with the continued operation of the engine. If a hazard is created by the continued rotation of an engine driven accessory after a failure or malfunction, provisions to stop its rotation or eliminate

the hazard must be provided. The effectiveness of this device should be demonstrated by test.

(6) The main transmission and rotor drive system should be protected from excessive torque loads and damage imposed upon them by accessory drives. One method which has been used is a torque limiting device (i.e., shear section of main rotor drive shaft). The effectiveness of any protection device should be demonstrated by test.

AC 29.1165. § 29.1165 (Amendment 29–12) ENGINE IGNITION SYSTEMS.

a. Explanation.

(1) This section defines the design requirements for battery, generator, and magneto ignition systems installed in either reciprocating or turbine engine powered rotorcraft.

(2) The requirements specify common failure modes of batteries, generators, and installed wiring which must be considered in the design process and provides for crew warning of malfunctions.

b. Procedures.

(1) In a battery ignition system, a generator should be available to supply current to the engine ignition system if the battery fails. The generator power should be switched over automatically with an appropriate warning to the crew. The automatic switchover can be accomplished by a low voltage sensor which activates a relay that simultaneously activates a caution light in the cockpit.

(2) An electrical load analysis should be conducted to insure that the capacity of the batteries and generator is large enough to meet the worst-case demands in the system. If there are other electrical system components installed which draw from the same source, the analysis should show that there is sufficient electrical power available from either the battery or the generator to operate all components simultaneously.

(3) The requirements of § 29.1165(c)(1) through (3), should be demonstrated by test. A proposed test plan should be coordinated with the FAA/AUTHORITY prior to conducting the testing.

(4) Compliance with the requirements of § 29.1165(d) can be shown by a failure mode and effect analysis.

(5) The requirements of § 29.1165(e) and (f) are self-explanatory.

SUBPART E - POWERPLANT

POWERPLANT FIRE PROTECTION

AC 29.1181. § 29.1181 (Amendment 29–26) DESIGNATED FIRE ZONES: REGIONS INCLUDED.

a. Explanation. A designated fire zone is a zone on a rotorcraft within which it is assumed (based on past operational experience) that a severe fire (see definitions) will occur sometime in the service life of each rotorcraft; therefore, proper protection must be provided for each new or modified unit by meeting the requirements of §§ 29.1183 through 29.1203. Some common examples of designated fire zones are:

(1) For reciprocating engines:

(i) The power section.

(ii) The accessory section.

(iii) The complete powerplant compartment, if there is no isolation between the power and accessory sections.

(2) Any auxiliary power unit (APU) compartment.

(3) Any fuel burning heater or other combustion equipment installation described under § 29.859.

(4) For Turbine Engines:

(i) The compressor section.

(ii) The accessory section.

(iii) The combustor turbine and tailpipe section unless they--

(A) Do not contain lines and components carrying flammable fluids or gases; and

(B) Are isolated from the designated fire zone prescribed in § 29.1181(a)(6) by a firewall that meets § 29.1191.

(5) Any other essential or non-essential device or system (such as spray rigs using flammable fluids) capable of leaking flammable fluid or gas and creating a severe fire.

b. Definition. Severe fire. See definition in paragraph AC 29.859.

c. Procedures. A FAA/AUTHORITY/applicant design review should be conducted early during certification to identify all designated fire zones and to define the detailed method-of-compliance to be used to meet the requirements of §§ 29.1183 through 29.1203. If significant design changes are made the design change and the method-of-compliance should be re-reviewed to insure they properly support the certification requirements.

AC 29.1183. § 29.1183 (Amendment 29-22) LINES, FITTINGS, AND COMPONENTS.

a. Explanation. This section requires that any line, fitting or other component of a flammable fluid, fuel or flammable gas system which carries, conveys or contains the fluid or gas in any area subject to engine fire conditions (i.e., a severe fire) must be at least fire resistant (reference § 1.1 for definition of fire resistant and see paragraph AC 29.859 which defines a severe fire). An exception is for flammable fluid tanks and supports which are part of and attached to the engine or are in a designated fire zone. These items are required to either be fireproof (see § 1.1 for definition of fireproof and see paragraph AC 29.859 which defines a severe fire) or to be enclosed by a fireproof shield, unless fire damage to any non-fireproof part (e.g., secondary line or valve support) will not cause leakage of a flammable gas, flammable fluid or otherwise prevent continued safe flight and landing of the rotorcraft. All such components must be shielded, located, otherwise protected, or a combination to safeguard against the ignition of leaking flammable fluids or gases. Integral oil sumps of less than 25 quarts capacity on a reciprocating engine need not be fireproof or enclosed by a fireproof shield; however, they should be fire resistant. Most integral sumps in this category are, by natural design and material selection, fire resistant. Exemptions to the preceding requirements are as follows:

(1) Lines, fittings and components already approved under Part 33 as part of the engine itself;

(2) Vent and drain lines (and their fittings) whose failure will not result in or add to an operational fire hazard. In addition, all flammable fluid drains and vents must discharge clear of the induction system air inlet and other obvious ignition hazards.

b. Procedures. A detailed review of the design should be conducted to identify and quantify all lines, fittings, and other components which carry flammable fluids and/or gases and are in areas subject to engine fire conditions such as engine compartments and other fire zones. Once these items are identified the design means of fire protection should be selected and validated, as necessary, during certification. For materials and devices that cannot be qualified as fireproof or fire resistant by similarity or by known material standards, testing to severe fire conditions (see definition, AC 20-135, and AC 23-2 for detailed requirements) should be conducted on full-scale specimens or representative samples to establish their fireproof or fire resistance capabilities. Exceptions to these standards (as provided in the regulatory

section) should be reviewed and approved/disapproved on a case-by-case basis during certification. Also, operational fire hazards from drains, vents, and other similar sources should be identified and eliminated during certification.

AC 29.1185. § 29.1185 FLAMMABLE FLUIDS.

a. Explanation. This section requires that fuel, flammable fluid or vapor tanks, reservoirs or collectors be sufficiently isolated from engines, engine compartments, and other designated fire zones so that hazardous heat transfer from these areas to fuel, flammable fluid, and vapor tanks, reservoirs or collectors is prevented in either normal or emergency service.

b. Definitions.

(1) Fuel or Flammable Fluid Collector. Any device such as a large valve, accumulator, or pump that contains a significant amount of flammable fluid, fuel, or vapor (e.g., the volume equal to 10 ounces or more of fluid).

(2) Flammable Fluid or Vapor Tank. Any fuel, flammable fluid or vapor tank, reservoir or collector.

(3) Sufficiently Isolated. Fuel, flammable fluids, or vapors in a tank, reservoir, or collector are insulated, removed, otherwise protected or a combination such that their worst case temperatures (the worst case measured or calculated surface temperature of their containers) in either normal or emergency service is always 50° F or more away from the autoignition temperature of the fuel, flammable fluid, or vapor in question.

(4) Minimum Autoignition Temperature. The temperature at a given vapor pressure at or above which liquid fuel or fuel vapor will self combust. When determining the minimum design value of autoignition temperature which will occur in either normal or emergency operations, the critical, in-service combination of vapor pressure and fuel temperature should first be determined.

(5) Hazardous Heat Transfer. A total incident heat flux (a combination of conduction, convection, and radiation, as applicable) from or in an engine compartment or any other designated fire zone which would raise the temperature level of a flammable fluid or fuel, their vapors, or the surface temperature of their containers to within 50° F or less of the minimum in-service autoignition temperature. Typically, the most critical heat transfer case to be considered is emergency service where a severe fire (see definition) is assumed to occur in each engine compartment and each designated fire zone on a case-by-case basis.

(6) Severe Fire. See definition in paragraph AC 29.859.

c. Procedures.

(1) The fuel, flammable fluid, and vapor system designs should be reviewed early in the certification process to insure that all fuel or flammable fluid or vapor tanks are properly identified and isolated from engines, engine compartments, and other designated fire zones during both normal and emergency operations such as in-flight engine compartment or other fire zone fires. In some cases fuel or flammable fluid components must be located in an engine compartment or other designated fire zone. In these cases, an equivalent safety finding (which considers the design, construction, materials, fuel lines, fittings, and controls used in the system, or system segment, contained in the engine compartment or other designated fire zone) should be undertaken as a part of the normal certification process. If the level of safety provided is equivalent to that provided by removing the system or system segment from the engine compartment or designated fire zone, then the design should be accepted. For fuel tanks only, isolation is required by regulation to be achieved by use of either a firewall (reference paragraph AC 29.1191 for Firewall Requirements) or by use of a shroud. A shroud if used should be fireproof (see § 1.1 for definition and the definition of a Severe Fire for further details) and should be drainable (or otherwise inspectable) to insure the fuel tank is not leaking in service. For other flammable fluid or vapor tanks, the regulations allow either the identical treatment previously described for fuel tanks (i.e., firewalls or shrouds) or, alternatively, use of an equivalent safety finding. Regulations require that the equivalent safety finding be based on system design, tank materials, tank supports, and flammable fluid system connectors, lines, and controls. In all cases the flammable fluids, fuels, and vapors should be sufficiently isolated from hazardous heat fluxes during both normal and emergency operations to prevent autoignition.

(2) In addition, the regulations require at least ½-inch of clear airspace between each flammable fluid or vapor tank, and each firewall or shroud that isolates the system, unless equivalent means (such as fireproof insulation) are used to prevent hazardous heat transfer from each engine compartment or other fire zone to the flammable fluid or vapor mass (or its container surface) at the fluid or vapor's minimum autoignition temperature. If in-service structural deflections are significant, they must be taken into account when certifying the ½-inch minimum clear airspace requirement. For example, if a ½-inch clearance exists on the ground but in some normal and emergency flight conditions (e.g., autorotation) the ½ inch is reduced to ¼ inch at a critical time (in-flight engine fire), then the design (static) configuration should have at least a ½ plus ¼ equals 3/4-inch static clear airspace to insure the regulation's intent is met. Alternatively, fireproof insulation or additional stiffeners could be used to insure the regulation's intent is met (i.e., the thermal equivalent of ½ clearance is maintained at all times). Any material used as insulation on or used adjacent to flammable fluid or vapor tank, should be certified as chemically compatible with the flammable fluid or vapor and to be non-absorbent in case of fuel or vapor leaks. Otherwise, the material should either be treated for compatibility and non-absorbency or not accepted.

AC 29.1187. § 29.1187 DRAINAGE AND VENTILATION OF FIRE ZONES.

a. Explanation. To insure that any component malfunction which results in fuel, flammable fluid or vapor leaks is safely drained or vented overboard and to insure that a fire hazard is not created during either normal or emergency service, there should be complete, rapid drainage and ventilation capability present for each part of the rotorcraft powerplant installation and any other designated fire zone which utilizes flammable fluid or vapor carrying components. As a minimum, the routing, drainage, and ventilation system should accomplish the following:

(1) It should be effective under normal and emergency operating conditions.

(2) It should be designed and arranged so that no discharged fluid or vapor will create a fire hazard under normal and emergency operating conditions.

(3) It should prevent accumulation of hazardous fluids and vapors in any engine compartments and other designated fire zones.

b. Definitions. Drip Fence. A physical barrier that interrupts the flow of a liquid on the underside of a surface, such as a fuel tank, and allows any leaked liquid to drip from the surface away from a hazardous locations to a safe external drain.

c. Procedures. The design of flammable fluid and gas systems running through engine compartments and other designated fire zones should have a thorough hazard analysis performed early during certification. The analysis should be updated periodically as design changes dictate. The hazard analysis should identify and quantify all normal and emergency service failures that could result in leakage of fuel, flammable fluids and vapors. Once these potential hazards are identified and quantified, appropriate design features, such as drains, drip fences and vents, that minimize or eliminate the hazard should be provided. These means should be analyzed and/or tested, as necessary, to insure that their size, flow capacity, and other design parameters are adequate to rapidly remove hazardous fluids and vapors safely away from the rotorcraft under normal and emergency flight conditions. Typically a venting or draining system should be designed to a 3-to-1 flow capacity margin over the probable worst case leak to which it could be subjected. Adverse effects such as clogging and surface tension flow reduction should be accounted for in design. Testing, including flight testing, using inert fluids or vapors may be necessary for proper design certification. In some instances it may be appropriate to include ventilation and drainage tests when the aircraft is parked.

AC 29.1189. § 29.1189 (Amendment 29-26) SHUTOFF MEANS.

a. Explanation.

(1) This section establishes the requirements for controlling hazardous quantities of flammable fluids which flow into, within, or through designated fire zones.

(2) When any shutoff valve is operated, any equipment, including a remaining engine, which is essential for continued flight, cannot be affected.

b. Procedures.

(1) Combustible fluid supply lines which pass into, within, or through a firewall into the fire zone must incorporate shutoff valves. This requirement does not apply to lines, fittings, and components which were certified with and are part of the engine. These requirements do not apply to oil systems for Category B rotorcraft with reciprocating engines with less than 500 cubic inches displacement or to any other installation where all components, including the oil tanks, are fireproof or are located in an area that will not be affected by an engine fire.

(2) Eight fluid ounces or less of a combustible fluid is not considered hazardous and no more than this amount should be present after activating the shutoff valve.

(3) Engine isolation is to be maintained when incorporating shutoff valves into engine fuel and lubrication lines. The design must insure that when one engine is shut down or fails and the fuel and lubrication fluid shutoff valves are activated, the remaining good engine is not affected in any way, and the rotorcraft can continue safe flight to a landing. This should be demonstrated by test.

(4) Each shutoff valve located in a fire zone should be fireproof. If the shutoff valve is located outside of the fire zone, then it should be at least fire resistant or protected so that it will function under a worst case fire condition within a fire zone. This should be demonstrated by test.

(5) Except for ground-use-only auxiliary power unit installations, the flammable fluid shutoff to all engine installations must be protected from inadvertent operation. Where electrical shutoffs are used, the switches must be guarded or require double actions. If the shutoffs are mechanically activated, the design of the knob and the location of the lever must be such that inadvertent actuation cannot occur. It must be possible to reopen the shutoff valve in flight after it has been closed and this should be demonstrated by test.

AC 29.1191. § 29.1191 (Amendment 29-3) FIREWALLS.

a. Explanation. This section states the certification requirements for the proper certification of fireproof protective devices such as firewalls, shrouds, or equivalent. These devices are necessary to isolate each engine (including combustor, turbine, and tailpipe sections of turbine engines and auxiliary propulsion units (APU); each APU; each combustion heater; each unit of combustion equipment; or each high temperature device (or source) from personnel compartments and critical components (not already protected under § 29.1191). The isolation of these fire zones is necessary to prevent

the spread of fire, prevent or minimize thermal injuries and fatalities, and prevent damage to critical components that are essential to a controlled landing. Even though § 29.1191(b) implicitly excludes APU's, combustion heaters, and other combustion equipment that are not used in flight; they should be protected by fireproof enclosures, because of § 29.901(d) and the requirements of the relevant parts of §§ 29.1183 through 29.1203. This is because, even if the device is rendered inoperative in flight, it typically contains residual heat, fuel, fumes and potential ignition sources (i.e., "potential hazards"). Each fireproof protective device must, by regulation, meet the following criteria:

(1) Its design and location must take into account the probable fire path from each fire zone or source considering factors such as internal airflow, external air flow, and gravity.

(2) It must be constructed so that no hazardous quantity of air, fumes, fluids, or flame can propagate through it to unprotected parts of the rotorcraft.

(3) Its openings (e.g., shaftholes, lineholes, etc.) must be sealed with close fitting fireproof grommets, bushings, bearings, firewall fittings, or equivalent that prevent burn through and leakage of hazardous fumes or fluids from the fire zone.

(4) It must be fireproof (see definition).

(5) It must be either corrosion resistant or otherwise safely protected from corrosion.

b. Definitions.

(1) Fireproof Protective Device. A fireproof protective device is a device such as a firewall, shroud, enclosure, or equivalent used to isolate a heat or potential fire source (severe fire) from personnel compartments and from critical aircraft components which are essential for a controlled landing.

(2) Fireproof. Fireproof is defined in § 1.1 "General Definitions."

(3) Controlled Landing. A landing which is survivable (i.e., does not fatally injure all occupants) but may produce an unairworthy, partially salvageable, or unsalvageable rotorcraft.

(4) Severe Fire. See definition in paragraph AC 29.859.

c. Procedures. Fireproof protective devices are typically certified by analysis, tests, or a combination conducted during the certification process, including flight tests or simulated flight tests, as follows:

(1) Fireproof protective devices should be provided wherever a hazard exists which requires isolation from a severe fire (see definition) to avoid fires in personnel compartments and to avoid thermal damage to critical components (such as structural elements, controls, rotor mechanisms, and system components) that are necessary for a controlled landing. A thorough hazard analysis should be conducted during certification to identify, define and quantify in order of severity (i.e., maximum temperature, hot exposed area, etc.) all thermal hazards or zones that require fireproof protection in a given design. Engines (including the combustor, turbine, and tailpipe sections of turbine engines), APU's, combustion heaters, and combustion devices are required by regulation to be isolated. Other high temperature devices may also require isolation because of local hot spots (which occur during normal operations or from failure modes) that can thermally injure occupants or cause spontaneous combustion of surroundings. A hazard analysis should identify these potential problems and provide proper certification solutions.

(2) Fireproof protective devices should be able to withstand at least 2000 ± 150° F for at least 15 minutes (reference AC 20-135). The fireproof protective device should allow the protected parts, subsystems or systems to perform their intended function for the duration of a severe fire (see definition). For firewalls, examples of flat, geometry materials undergoing uniform heat fluxes with material gauges that automatically meet the certification requirements are given in figure AC 29.1191–1. If firewalls are utilized that involve other materials, significant geometric changes, or significantly non-uniform heat fluxes, then automatic compliance may not be assured. In such cases the fireproof protective devices should be analyzed and, in some cases, tested in accordance with AC 23–2 to ensure proper certification. For example, a curved protective surface may absorb a uniform incident heat flux unevenly and create a local hot spot that exceeds 2050° F that burns through in less than 15 minutes; whereas, a flat surface of equal thickness would not exceed 2050° F and would not burn through in less than 15 minutes. It should be noted that composite materials are not generally used for protective devices because of their inability to withstand high temperatures (i.e., exceedance of the glass transition temperature); however, some specially formulated composites have been previously certified as engine cowlings. Titanium is an acceptable material for fireproof protective devices such as firewalls. However, use of titanium should always be carefully considered and reviewed, because it can lose all structural ability and burn severely (self combust) above 1,050° F, under certain thermodynamic environments, and contribute to the fire instead of providing the intended fire protection. AC 33–4, "Design Considerations Concerning the Use of Titanium in Aircraft Turbine Engines" and MIL-HDBK-5D contain more detailed information on the unique thermal properties of titanium.

FIGURE AC 29.1191-1
TABLE OF MATERIALS AND GAGES ACCEPTABLE
FOR FIREPROOF PROTECTIVE DEVICES WITH FLAT
SURFACE GEOMETRIES (1)

MATERIAL(2)	MINIMUM THICKNESS(3)
Titanium Sheet	.016 in
Stainless Steel	.015 in
Mild Carbon Steel	.018 in
Terne Plate	.018 in
Monel Metal	.018 in
Firewall Fittings (Steel or Copper Base)	.018 in(4)

NOTES:

(1) Assumes essentially flat vertical or horizontal surfaces undergoing a uniform heat flux. Any significant variation in either geometry or heat flux distribution should be examined in detail for adequate gauge thicknesses on a case-by-case basis.

(2) Must have corrosion protection if not inherent in the material itself.

(3) The minimum thickness is for thermal containment only. Structural integrity considerations may require thickness increases. MIL-HDBK-5D contains material allowable versus temperature data for common metallic materials.

(4) This is the minimum wall thickness measured at the smallest dimension (e.g., thread root or other location) of the part.

(5) Distortion of thin sheet materials and the subsequent gapping at lap joints or between rivets is difficult to predict; therefore, testing of the simulated installation is necessary to prove the integrity of the design. However, rivet pitches of 2 inches or less on non load-carrying titanium firewalls of .020 inch or steel firewalls of .018 inch are acceptable without further testing.

(3) The probable path of a fire (as affected by internal and external air flow during normal flight and autorotation, gravity, flame propagation paths, or other considerations) should be taken into account when performing the hazard analysis of item (1). Such a review will insure that fireproof protective devices are placed in the proper location for intercepting, blocking or containing a severe fire before occupants are injured and a controlled landing is prevented. If the probable path cannot be readily determined by inspection or analysis, testing using simulated airflows, rotorcraft attitudes, and dyed inert fluids or vapors can be used to aid in this determination.

(4) Each opening in a protective device should be sealed with close fitting sealing devices such as fireproof grommets, bushings, firewall fittings, rotating seals or equivalent that are at least as effective as the fireproof protective device itself. This is necessary to insure that no local breakdowns in protection occur. For materials not listed as acceptable in item (1), FAA/AUTHORITY standards and analysis and testing should be required in accordance with the definition of a severe fire for proper substantiation.

(5) Each protective device should be fireproof in order to withstand a severe fire (see definition). Unless designs and materials have been previously FAA/AUTHORITY approved (e.g., see Item 1), the protective device's design and material selection should be tested to insure its fireproof thermal and structural integrity. A full-scale test of a structurally loaded article or a representative sample should be conducted to insure proper compliance is achieved. Also, the continued sealing ability of the protective device in its deformed state due to a hard controlled landing should be considered during certification (e.g., use of ductile materials). The corrosion environment should be defined and appropriate protection provided. Phased inspections should be specified, if necessary, to insure continued corrosion integrity. Certification tests for adequacy of corrosion protection should be conducted, using sample plates or by other equivalent means, as required.

AC 29.1193. <u>§ 29.1193 (Amendment 29-13) COWLING AND ENGINE COMPARTMENT COVERING</u>.

a. <u>Explanation</u>.

(1) Section 29.1193(a) requires the cowling and engine compartment coverings to withstand structural loads experienced in flight.

(2) In order to prevent pooling of flammable fluids, § 29.1193(b) requires ventilation and complete drainage from the cowling and engine compartment as specified in § 29.1187.

(3) In § 29.1193(c), (d), and (e), clarification of fireproof requirements is provided along with interaction between the requirements of § 29.1191 for firewalls.

b. Procedures.

(1) Compliance with § 29.1193(a) can be shown by analyzing the cowling and engine compartment covering and determining that no structural degradation will occur under the highest loads experienced on the ground or in flight.

(2) Compliance with § 29.1193(b) can be accomplished by ensuring that the drain will discharge positively with no traps and is a minimum of 0.25 inches in diameter. No drain may discharge where it might cause a fire hazard. This can be demonstrated by colored liquid flowing through the drain system while in flight. The dye should not impinge on any ignition source during any approved flight regime.

(3) Compliance with the fireproof requirements of § 29.1193(c), (d), and (e) can be accomplished by demonstrating that the material will withstand a 2,000° F ± 50° F flame for 15 minutes while still fulfilling its design purpose. This testing should accurately simulate, as near as practicable, the likely fire environment to prove the materials and components will provide the necessary fire containment when exposed to a fire situation in service. In addition to the fireproof requirements, the requirements of § 29.1191 must also be met. The primary objectives are:

(i) To contain and isolate a fire and prevent other sources of fuel and/or oxygen from feeding the existing fire; and

(ii) To ensure that components of the engine control system will function effectively to permit a safe landing and/or shutdown of the engine.

AC 29.1193A. § 29.1193 (Amendment 29-26) COWLING AND ENGINE COMPARTMENT COVERING.

a. Explanation. Amendment 29-26 adds a new § 29.1193(f) that requires redundant retention means for each panel, cowling, engine, or rotor drive system covering that can be opened or readily removed. Conventional fasteners for these devices are subject to frequent operation by maintenance personnel and have deteriorated, failed from wear or vibration, or been left unsecured after preflight inspections. Such a failure could be hazardous if a loose panel, cowling, or covering strikes, or is struck by, the rotors or by critical controls.

b. Procedures.

(1) Compliance with § 29.1193(f) can be accomplished by simulating, or actually failing, one or more of the retention devices or by structural analysis. If a failure of a single retention device can contribute to multiple failures, these multiple failures should be considered. It should be shown that the cowling or cover will not open, strike, or be struck by the rotor or other critical component.

(2) Consideration should be given to minimize the possibility of latches being improperly closed that could result in a cowl coming open in flight.

(3) The failure of one latching device should not cause the failure of another latching device.

(4) The consequences of “forgetting” to latch a cowl should be considered.

(5) The use of safety straps should be considered to minimize the impact of a latching device failure.

AC 29.1194. § 29.1194 (Amendment 29-3) OTHER SURFACES.

a. Explanation. This section states the fire resistance requirements for material surfaces near engine compartments and designated fire zones (other than tail surfaces not subject to heat, flames, or sparks emanating from a designated fire zone or engine compartment).

b. Definition.

(1) Other Surface. Any airframe, system, or powerplant component aft of and near an engine compartment, a designated fire zone, or another heat source which would receive a heat flux as a result of a fire in the engine compartment or fire zone that would require the component to be fire resistant.

(2) Fire Resistant. In accordance with § 1.1, is defined as follows:

(i) Sheet metal or structural members with the capacity to withstand the heat associated with the fire at least as well as aluminum alloy in dimensions appropriate for the purpose for which they are used.

(ii) Fluid carrying lines, fluid system parts, wiring, air ducts, fittings and powerplant controls with the capacity to perform their intended functions under the heat and other conditions resulting from a fire.

(3) Fire. A fire in either an engine compartment or a designated fire zone is assumed to occur that produces a heat flux on a system, airframe or powerplant component aft of or near the fire. The effect of each such fire on other surfaces must be considered on a case-by-case basis to determine the critical case. Unless a more rationale definition is furnished and approved during certification, the fire in any engine compartment or designated fire zone should be assumed, for purposes of analysis, to be a severe fire (see definition in paragraph AC 29.859).

c. Procedures.

(1) Other surfaces should be identified during certification by a design review and by a conservative, thorough hazard analysis based on an analytical estimate of the total heat flux (i.e., conduction, convection, and radiation in combination, as applicable) using the definition of a severe fire and of the resultant “other surface” temperature based on a single fire occurring in each engine compartment and designated fire zone, on a case-by-case basis. Once the other surfaces are identified and their severe fire induced maximum temperatures determined, their configuration and material selection should be reviewed on a case-by-case basis to determine either that they are fire resistant, that they can be made fire resistant (within the limits of practicability), or that it is impracticable to make them fire resistant. If the non-fire resistant other surfaces can be readily made fire resistant they should be. If it is impracticable to make them fire resistant, then they should be relocated, insulated, or a combination in order to reduce the total incident heat flux (and, thus, lower their surface temperature) so that they no longer need to be fire resistant. If insulation is used to shield a surface that is subjected to a significant temperature, it must be fire resistant.

(2) A partial validation of analytical heat flux models using the definition of a severe fire can sometimes be achieved during certification tests by using thermocouples or heat-sensitive stickers to measure in-flight temperature ranges and distributions on other surfaces from known thermal environments in engine compartments or other designated fire zones.

AC 29.1195. § 29.1195 (Amendment 29-17) FIRE EXTINGUISHING SYSTEMS.

a. Explanation. This section specifies the types of rotorcraft which must have fire extinguishing systems and the number of discharges. The types of tests and airflow conditions are also specified for demonstration of compliance.

b. Procedures.

(1) The requirements are applicable to each turbine engine powered rotorcraft, Category A reciprocating engine powered rotorcraft, and each Category B reciprocating engine powered rotorcraft with an engine of more than 1,500 cubic inches. There must be a fire extinguishing system for the designated fire zones defined in § 29.1181.

(2) A fire extinguishing system should dilute all of the atmosphere within and entering a compartment with sufficient inert agent that it will not support combustion, and continue the process long enough to extinguish the existing flame and either dissipate the vapors or eliminate the ignition sources. Conventional systems utilize perforated tubing or discharge nozzles to distribute a specific quantity of agent in approximately 2 seconds. HRD (high rate of discharge) systems utilize open end tubes to deliver a given quantity of agent within 1.35 seconds for CO_2 and 1 second for all other agents. The HRD systems are recommended for use in compartments having high airflow where the required discharge rates can be more effectively provided by a HRD rather than a perforated tubing system. Tests indicate that unrestricted release through such an open end tube distribution system can be relied on for adequate

distribution, provided the outlets are located properly. Although the discharge times given above are considered satisfactory, any reduction in discharge time below that specified would improve system effectiveness. However, consideration should be given to the time requirements for draining accumulated combustibles, dissipating combustible vapors and cooling or eliminating ignition sources to assure that the minimum agent concentration is maintained for a duration sufficient to prevent reignition of the combustibles.

(3) The possible variety of tankage and plumbing configurations to accomplish the result should be examined for each specific aircraft in order to achieve the optimum. Systems can vary from tankage in a central location, which is directed through complex distribution systems to various hazards, to agent which is tanked adjacent to each hazard. Terminology generally accepted to define various arrangements is as follows:

(i) Central System: A single supply of agent, centrally located, with valves to direct the agent to any protected zone or zones.

(ii) Individual System: A separate supply of agent for each protected zone or zones.

(4) The selection of the distribution system should be made with full cognizance of the hazards to be covered. The distributor system (i.e., discharge nozzles fed individually by lines from a central manifold) is the most efficient. The complexity of such a system, however, may show it in a less favorable light than the loop or ring system (i.e., orifices drilled in a distribution line, the loop being fed from one end, and the ring being fed from a point on a continuous circle) as far as weight, complexity of manufacture and types of hazard to be covered are concerned. For HRD systems, open feed lines are recommended. In high air flow zones, outlets should be located as far upstream as possible with the discharge directed across the air stream and slightly downstream such that a helical spray pattern is produced. In zones of low or negligible air flow, the outlet location is not critical but a location at the top-center of the zone with the agent directed downward is suggested.

(5) In a conventional CO_2 system, all lines upstream of direction valves should be 4,000 PSI (27,600 kPa) burst and lines which are open should be 2,000 PSI (13,800 kPa) burst. Care should be taken to insure that all valving and/or equipment in the distribution line has an appropriate flow rate. Expansion of fittings, tee, etc., should be checked to insure that not over 150 percent of the inflow area exists downstream. 130 percent is accepted as the safest target value. If overexpansion occurs, snow will form and plug the lines. Because of high storage pressure, the orifice areas of a conventional CO_2 system seem to act as the flow control with system flow losses as a minor effect. Because of this, distribution systems of 50 ft. (15.24m) or less can be satisfactorily computed by the following factor:

(i) Line Area = .10 sq. in./lb CO_2/sec (142.2 mm^2/kgCO_2/sec).

(ii) Orifice Area = .072 sq. in./lb CO_2/sec (102.4 mm^2/kgCO_2/sec) (72 percent of equivalent line area).

(iii) Min. Orifice Size = 1/16 in. (1.6 mm) diameter.

(6) In low pressure systems such as “CB” and CH_3Br, line and fitting losses become a greater effect in the discharge rates and distribution than was true with CO_2. Consideration should be given to the small I.D. of an AN line fitting with respect to the I.D. of the mating tube sizes. This may be done by extra pressure drop allowances, by enlarging these fittings, or by making special fittings. Within reasonable line lengths, however, area factors can be used with fair accuracy. (It is generally conceded that a system designed to these factors, especially a complex layout, should be carefully tested or analyzed for time of discharge and distribution.) These areas are as follows:

(i) Line Area = .07 sq. in./lb agent/sec (99.6 mm^2/kg agent/sec).

(ii) Orifice Area = .05 sq. in./lb agent/sec (71.1 mm^2/kg agent/sec) (72 percent of equivalent line area).

(iii) Min. Orifice Area = 1/32 in. (.8 mm) diameter.

(7) For HRD systems of all types, feed line cross-sectional area is dependent upon the rate desired and upon system volume considerations. The minimum diameter of the feed line is established by the required rate; the maximum diameter of the feed line, and by the need for keeping the system volume at a minimum. Specifically, with the propelling gas in a system pressurized to 400 PSI (2760 kPa), the “volumetric efficiency” should be at least 0.50; that is, the original volume of the propelling gas in the system should be at least ½ the volume of the entire system, including that of the agent container. It is recommended that for HRD systems the feed lines be open. No nozzles or series of perforations are required. It is believed that the unrestricted release of the more volatile liquid agents, as well as carbon dioxide, can be relied upon for adequate distribution, provided the outlets are properly located. It is important that any such system be carefully tested for time of discharge, distribution, and minimum concentrations.

(8) From the basic definition, the system should be effective if the distribution of the agent floods the various portions of a compartment simultaneously and dilutes the incoming air. It is noted that the typical high flow compartment requires a greater proportion of its total agent discharged at the air inlet than does the conventional low air flow zone. All parts of the fire extinguisher system directed to any one powerplant installation should be discharged simultaneously. The theory behind the HRD type system is that with rapid discharge of the agent, the concentration necessary for extinguishment is reached more rapidly with correspondingly less time for dissipation or dilution of the agent by incoming air. The duration of this critical concentration necessary for extinguishment is believed to remain the same as for conventional systems.

(9) Detailed system configuration recommendations are not available for conventional systems; however, the recommendations on the configuration of HRD systems would probably apply equally well to all types. For HRD systems, it is recommended that feed lines be as short as possible, requiring that agent containers be as close as practical to the zones to be protected. Feed lines should be direct; the fewer fittings and turns, the better. Expansions and restrictions have adverse effects on rate; and it is probable that in a feed line with long rises or many changes or direction, quantities of propelling gas can get past a liquid agent, thus reducing the discharge rate and making the discharge sporadic and ineffective. Where such fittings, changes of direction, and long vertical rises are unavoidable, compensation in the form of additional agent may be necessary.

(10) A fixed “one shot” fire extinguisher system should be provided for the heater extinguisher system in order to extinguish the fire in the combustion chamber. The regions surrounding the heater and combustion chamber must also be protected if these regions contain components with potential combustible leakage. No fire extinguishment is needed in cabin air passages.

AC 29.1197. § 29.1197 (Amendment 29-13) FIRE EXTINGUISHING AGENTS.

a. Explanation.

(1) Fire extinguishing agents used in rotorcraft fire extinguishing systems must be capable of extinguishing any fire in the area where the system is installed.

(2) The extinguishing agent must maintain its effectiveness after prolonged storage under the environmental conditions of the compartment in which it is stored.

(3) If a toxic extinguishing agent is used, the harmful concentration level of the fluid vapors must be determined and it must be shown that it is not possible for this concentration level to enter into any personnel compartment.

b. Procedures.

(1) The fire extinguishing system should dilute all of the atmosphere within and entering a compartment with sufficient inert agent so that combustion cannot be supported. The extinguishing process should continue for a duration sufficient in length to extinguish any existing flame. When a compartment is to be flooded with agent and there is a source of fresh air entering the compartment, the incoming air should be either shut off prior to the release of the agent or rendered inert by directing extinguishing agent into the air blast (preferably the former) or the quantity of agent should be increased to offset the incoming airflow.

(2) There are a number of extinguishing agents which have been used on rotorcraft in the past. The following list identifies the agent and some advantages and disadvantages of each.

Agents	Advantages	Disadvantages
Carbon Dioxide CO_2	Safest agent to use from the standpoint of toxicity and corrosion hazards.	Mental confusion and suffocation hazard to occupants if sufficient gas is discharged into personnel compartments. CO_2 has an extremely large variation in vapor pressure with temperature which makes it necessary to use stronger (heavier) containers than are required for methyl bromide.
Methyl Bromide CH_3Br	More effective for equal mass than CO_2. Approx. 80 percent of this agent by weight as compared to CO_2 is required. Less variation in vapor pressure than CO_2. Much lower container pressure required resulting in lighter containers. Treated magnesium alloys are satisfactory for use in CH_3Br systems outside of the potential fire zones.	Much more toxic than CO_2. Due to its toxic effects on humans, CH_3Br should not be used as a fire extinguisher agent in areas where harmful time concentrations can enter personnel compartment. Aluminum alloy material should not be used in methyl bromide systems due to serious corrosion and possible spontaneous ignition. Rapidly corrodes aluminum, magnesium, and zinc. Tubing systems should be vented at all times and steps should be taken to free the tubing of residual methyl bromide after each discharge. Containers must be recharged at the extinguisher manufacturer's plant or at a depot by specially trained personnel.
Bromo-chloro-methane ("CB") CH_2BrCl	Low vapor pressure compound - 3 PSIA (20.7 Kpa) at 70° F (21.1°C). One of the more effective agents.	Toxic when burned.
Dibro-modi-	Low vapor pressure compound - 14 PSIA (96.5 Kpa) at 70° F	Very toxic when burned.

Agents	Advantages	Disadvantages
fluoro-methane CF_3Br	(21.1° C). One of the more effective agents. Non-corrosive to aluminum, steel and brass.	
Bromotri fluoro-methane CF_3Br	One of the more effective agents. Low toxicity in natural condition and when burned. Non-corrosive to aluminum, steel and brass.	High vapor pressure compound - 220 PSIA (1517 Kpa) at 70° F (21.1° C). Least toxic of agents in burned condition except for CO_2.
Nitrogen N_2	If a fuel tank inerting system using N_2 is provided, use as extinguishing agent may be considered. N_2 offers cooling not available with CF_3Br.	3 - 4 times quantity and rate of conventional agents required.
Note: The relative effectiveness of the various agents listed above is considerably Influenced by the type of system employed, high rate discharge or conventional; by the method of distribution, open end outlet, nozzle, or spray ring; and by the air flow conditions.		

(3) The extinguishing agent must not be affected by the temperature extremes experienced in the compartments in which they are stored. The agent containers should be either “winterized” for extreme temperature operation or so located in the rotorcraft that they will not be subjected to extreme temperatures. Safe limits for unwinterized carbon dioxide cylinders are approximately 0° F (-18° C) to 140° F (60° C). The cartridge detonators have a variable age-with-temperature limit. Contact should be made with the manufacturer for the latest information available for both installation and storage temperatures.

(4) It must be shown by test that the harmful level of toxic fluid or vapors cannot enter into any personnel compartment due to leakage or activation of the system during normal operation of the rotorcraft in flight or on the ground. The entire fire extinguishing system should be mocked-up or installed in the aircraft down to and including distribution tubing and outlets. The tests should be conducted under actual or simulated cruise conditions. The system should be discharged, and compliance verified by use of an appropriate method for measuring agent concentration.

AC 29.1199. § 29.1199 (Amendment 29–13) EXTINGUISHING AGENT CONTAINERS.

a. Explanation.

(1) This section presents the requirements for fire extinguisher containers. The containers are subjected to high internal pressures for the propulsion of the agent as well as a wide range of external environmental temperatures.

(2) The containers must be adequately protected to preclude any adverse effect on the operation of the system from these external influences.

b. Procedures.

(1) Each extinguishing agent container must have a pressure relief valve which will open at a pressure that is below the burst pressure of the agent container. The pressure relief valve lines must be located and protected so that they cannot be clogged by dirt, ice, or other contaminates. Both the agent container burst pressure and the relief valve opening pressure limits should be verified by test. Agent containers which meet military specification, MIL-C-22284, requirements are acceptable.

(2) The containers should be located so that an indicator is readily visible to determine if the container has discharged or the charging pressure is below operating minimums. The number and size of agent containers should be adequate to obtain the established agent concentration and duration for the intended compartment. It is preferred that the agent supply containers and the flow control valves are not located in a fire zone.

(3) The brackets for mounting the containers and securing the discharge lines should be designed to withstand all loads to which they may be subjected due to recoil during discharge or any other applied load factor.

(4) The agent containers should be protected from extreme temperature excursions which could have an adverse effect upon the operation of the extinguishing system. Safe temperature limits for “unwinterized” carbon dioxide cylinders are approximately 0° F (-18° C) to 140° F (60° C). Safe limits for “CB” and CH_3Br spheres are approximately -65° F (-54° C) to 200° F (93° C). The cartridge detonators have a variable age-with-temperature limit and the manufacturer should be contacted for the latest information on installation and storage temperatures. Location of the container in the aircraft should take these temperature limits into consideration.

AC 29.1201. § 29.1201 FIRE EXTINGUISHING SYSTEM MATERIALS.

a. Explanation.

(1) Many different fire extinguishing agents are available for use in fire extinguishing systems. The choice of extinguishing agent should take into account the chemical reaction (if any) between the extinguishing agent and the materials utilized in the extinguishing system. If there are any incompatibilities, they should not create a hazard by creating volatile or toxic vapors or fumes which could feed a fire or cause injury to passengers, crew, or other personnel.

(2) The fire extinguishing components in an engine compartment must be fireproof to ensure operation in the event of a compartment fire.

b. Procedures.

(1) Compliance with the requirements of § 29.1201(a) can be demonstrated by analysis, test, or a combination of both.

(2) Certification data submitted by the applicant should contain a listing of the chemical ingredients of the extinguishing agent and the other materials in the extinguishing system. These data should also show that the chemical reaction (if any) of these materials, when combined, does not create a hazard.

(3) Where chemical compounds exist and the chemical reaction is not predictable when two different compounds are combined, actual tests may be necessary to determine the hazard potential.

(4) Analysis, test, or a combination of both may be used to demonstrate compliance with the fireproof requirement for all fire extinguishing components located within the engine compartment.

AC 29.1203. § 29.1203 (Amendment 29-40) FIRE DETECTOR SYSTEMS.

a. Explanation.

(1) Fire detection systems are required in turbine engine powered rotorcraft, Category A reciprocating engine powered rotorcraft and each Category B reciprocating engine powered rotorcraft where the engine displacement is greater than 900 cubic inches.

(2) This section specifies material, installation, and some operational requirements for fire detectors to ensure prompt detection of fire in the fire zones and other designated areas.

b. Procedures.

(1) The detector system should be designed for highest reliability to detect a fire and not to give a false alarm. It is desirable that it only responds to a fire and misinterpretation with a lesser hazard should not be possible. Engine overtemperature, harmless exhaust leakage, and bleed air leakage should not be indicated by a fire detector system. A fire detection system should be reserved for a condition requiring immediate measures such as engine shutdown or fire extinguishing. There are three general types of detector-procedure systems that are commonly used:

(i) A manual system utilizes warning lights to alert the pilot who then follows prescribed cockpit procedure as a countermeasure. A manual system is adequate for hazards in which a few seconds are not important.

(ii) There is also a semi-automatic system. Occasionally a rotorcraft becomes so complex that the emergency procedure exceeds reasonable expectations of the pilot. In such cases, psychology should be weighted against complexity, and “panic switches,” combining multiple procedure functions, should be provided to simplify the mental demands on the pilot. Speed is gained by such designs for hazards which may need it.

(iii) The detector of an automatic system automatically triggers the appropriate countermeasures and warns the pilot simultaneously. Such a system should be carefully evaluated to assure that the advantages outweigh the disadvantages and potential malfunctions.

(2) Fires, or dangerous fire conditions can be detected by means of various existing techniques. The following is a partial list of available detectors:

(i) Radiation-sensing detectors.

(ii) Rate-of-temperature-rise detectors.

(iii) Overheat detectors.

(iv) Smoke detectors.

(v) CO detectors.

(vi) Combustible mixture detectors.

(vii) Fibre-optic detectors.

(viii) Ultraviolet.

(ix) Observation of crew or passengers.

(3) In many rotorcraft it is desirable to have a detection system which incorporates several of these different types of detectors. Radiation-sensing detectors are most useful where the materials present will burn brightly soon after ignition, such as in the powerplant accessory section. Rate of rise detectors are well-suited to compartments of normally low ambient temperatures and low rates of temperature rise where a fire would produce a high temperature differential and rapid temperature rise. It should be noted that under certain circumstances, where a relatively slow temperature increase occurs over a considerable period of time, a fire can occur without detection by rate of rise detectors. Overheat detectors should be used wherever the hazard is evidenced by temperatures exceeding a predicted, set value. Smoke detectors may be suited to low air flow areas where materials may burn slowly, or smolder. Fibre-optic detectors can be used to visually observe the existence of flame or smoke. The three major detector types used for fast detection of fires are the radiation-sensing, rate-of-rise, and overheat detectors. Radiation-sensing detectors are basically “volume” type which senses flame within a visible space. Overheat-fire detectors can be obtained in either “continuous” or “unit” type.

(4) The detector system should:

(i) Indicate fire within 15 seconds after ignition, and show which engine compartment in which the fire is located.

(ii) Remain on for the duration of the fire.

(iii) Indicate when the fire is out.

(iv) Indicate re-ignition of the fire.

(v) Not by itself precipitate or add to the potential of any other hazards.

(vi) Not cause false warnings under any flight or ground operating condition.

A false fire detector indication could significantly increase crew workload, impair crew efficiency, or reduce safety margins and so is classified as a major failure condition. In consequence, such false fire detector indication should be shown to be improbable based on a probability assessment and service experience of the fire detector system. If the probability of the fire detection system experiencing a false indication cannot be shown to be improbable, a secondary means of determining the validity of the fire indication should be provided.

(5) Additional features of the detection system are as follows:

(i) A means should be incorporated so that operation of the system can be tested from the cockpit.

(ii) Detector units should be of rugged construction, to resist maintenance handling, exposure to fuel, oil, dirt, water, cleaning agent, extreme temperatures, vibration, salt air, fungus, and altitude. Also, they should be light in weight, small, and compact, and readily adaptable to desired positions of mounting.

(iii) The detector system should operate on the rotorcraft electric system without inverters. The circuit should require minimum current unless indicating a fire or unless a monitoring system is in use.

(iv) Fixed temperature fire detectors should preferably be set at 100° F (37.7° C) to 150° F (65.6° C) above maximum safe ambient temperature, or higher when in compartments where extremely high rate of rise is normally encountered.

(v) Detector system components located within fire zones should be fire resistant.

(vi) Each detector system should actuate a light which indicates the location of the fire. If fire warning lights are used, they must be in the pilot's normal field of view.

(vii) Two or more engines should not be dependent upon any one detector circuit. The installation of common zone detection equipment prevents the detection system from distinguishing between the engine installations, necessitating shutting down more than one engine.

(6) The sensing portion of the fire detection system should not extend outside of the coverage area into another fire zone. Detectors, with the exception of radiation–sensing detectors, should be located at points where the ventilation air leaves compartments. If a reverse-flow cooling system is used, detectors should be installed at locations which are outlets under both flight and ground operating conditions. Stagnant air spaces should be avoided and the number of ventilation air exits should be kept to a minimum. The ventilation requirements of § 29.1187(e) must also be taken into consideration. Compliance with these recommendations allows the effective placement of a minimum amount of detectors, and still ensures prompt detection of fire in those zones. Radiation-sensing detectors should be located such that any flame within the compartment is immediately sensed. This may or may not be where the ventilation air leaves the compartment.

(7) Fire detectors must be installed in designated fire zones, the combustor, turbine and tailpipe sections of turbine installations.

(i) Engine Power Section (Combustor, Turbine and Tailpipe): This zone is usually characterized by predictable hazard areas which facilitate proper detector location. It is recommended that coverage be provided for any ventilating air outlet as well as intermediate stations where leaking combustibles may be expected.

(ii) Compressor Compartment: This is usually a zone of relatively low air flow velocities, but wide geographical possibility for fires. When fire detectors other than radiation-sensing detectors are used, detection at air outlets provides the best protection, and intermediate detector locations are of value only when specific hazards are anticipated.

(iii) Accessory Bullet Nose: Where such a compartment is so equipped that it is a possible fire zone, its narrow confines permit sufficient coverage with one or more detectors at the outlets.

(iv) Heater Detector Location: An overheat detector should be placed in the hot air duct downstream of the heater. If the heater fuel system or exhaust system configuration is such that it is a fire hazard, the compartment surrounding the heater should also be examined as a possible fire zone.

(v) Auxiliary Power Unit Detector Location: The use of a combustion-driven auxiliary power unit creates another set of typical engine compartments defined and treated as above. Some units are so shrouded with fireproof material that these compartments exist only within the confines of the shroud. They are still, however, fire zones and must have a detection system.

CHAPTER 2. PART 29
AIRWORTHINESS STANDARDS
TRANSPORT CATEGORY ROTORCRAFT

SUBPART F - EQUIPMENT

EQUIPMENT - GENERAL

AC 29.1301. § 29.1301 FUNCTION AND INSTALLATION.

a. Explanation. It should be emphasized that this rule applies to each item of installed equipment which includes optional equipment as well as required equipment.

b. Procedures.

(1) Information regarding installation limitations and proper functioning is normally available from the equipment manufacturers in their installation and operations manuals. In addition, some other paragraphs in this AC include criteria for evaluating proper functioning of particular systems. (An example is paragraph AC 29 MG 1 for avionic equipment.)

(2) This general rule is quite specific in that it applies to each item of installed equipment. It should be emphasized, however, that even though a general rule is relevant, a rule that gives specific functional requirements for a particular system will prevail over a general rule. Therefore, if a rule exists that defines specific system functioning requirements, its provisions should be used to evaluate the acceptability of the installed system and not the provisions of this general rule. It should also be understood that an interpretation of a general rule should not be used to lessen or increase the requirements of a specific rule. Section 29.1309 is another example of a general rule, and this discussion is appropriate when applying its provisions.

AC 29.1303. § 29.1303 (Amendment 29-24) FLIGHT AND NAVIGATION INSTRUMENTS.

a. Explanation. This rule lists the flight and navigation instruments that are required for VFR certification. Several additional rules to be consulted when determining the flight and navigation instrument installation design are § 29.1321, arrangement and visibility, § 29.1331, flight instrument power supplies, and § 29.1333, systems that operate the flight instruments at each pilot station. Additional information regarding the different instruments can be found by referring to the Technical Standard Order (TSO) for each one. Compliance with the TSO requirements does not ensure compliance with the appropriate Part 29 requirements; however, satisfactory installation normally results. Other considerations may also be found by reviewing the requirements of §§ 29.1323, 29.1327, 29.1335, 29.1381, 29.1543, 29.1545, 29.1547, and Part 29, Appendix B. Paragraphs VIII(a) and (b) of Appendix B include IFR operation considerations for flight and navigation instruments. In addition, if the

maximum allowable airspeed is dependent on conditions such as weight and altitude, that information is normally provided on tables, graphs, placards, or other means in the cockpit and in the rotorcraft flight manual.

b. Procedures.

(1) The following instruments are considered to be flight instruments:

(i) Airspeed indicator.

(ii) Sensitive altimeter.

(iii) Free-air temperature indicator.

(iv) Nontumbling gyroscopic bank and pitch indicator.

(v) Gyroscopic rate-of-turn indicator with an integral slip-skid indicator.

(vi) Rate-of-climb (vertical speed) indicator.

(2) The remaining instruments are navigation instruments.

(3) If a speed warning device is required to be included as part of the rotorcraft design, it must meet the performance requirements given in the rule. In addition, the evaluation of the acceptability of the aural warning (i.e., this warning differs distinctively from aural warnings used for other purposes) should be accomplished by flight test personnel as part of their overall cockpit evaluation.

(4) Electronic Flight Instrument Systems (EFIS).

(i) Explanation. The increased use of microprocessor technology in avionic systems has resulted in the use of computer-generated graphics to replace conventional electromechanical instruments which are used for the display of flight information required by § 29.1303(f), (g), and (h). For IFR certified aircraft, the EFIS usually is used for the display of the magnetic gyro-stabilized direction indicator (slaved compass system.) These computer-generated graphics are usually displayed on small multicolor-shadow-mask cathode ray tubes (CRT) and replace the horizontal situation indicator (HSI) and the attitude direction indicator (ADI). This discussion presumes that the EFIS for which approval is sought meets the general requirements of an EFIS for a transport category airplane with regard to color, symbology, operation, and so forth. This paragraph along with some others in this document principally highlights the areas which are peculiar to the installation in a transport category rotorcraft. A discussion of the flight director function performed by the EFIS is given in paragraph AC 29.1335. A discussion of the location of the displays is contained in paragraph AC 29.1321. A discussion of the requirements for an EFIS in a transport category airplane is contained

in AC 25-11, Transport Category Airplane Electronic Display Systems, dated September 16, 1987.

(ii) Procedures.

(A) System Components. The system components require qualification testing to determine that their design is acceptable, free from hazards, and suitable to their airborne environment. Generally the components of the EFIS should meet the requirements of TSO C-113.

(1) Environmental Qualification. The EFIS hardware must be shown to be suitable to its airborne environment. A desirable way to qualify the system component is to obtain approval to the appropriate TSO. If the equipment is not TSO approved, it should be shown via testing that it complies with the requirements of SAE Document AS-8034. This will include testing in accordance with the appropriate categories of the latest revision of RTCA Document DO-160, JEDEC Publication No. 64D (Protection from Ionizing Radiation), and UL Document No. 1418 (Impact Implosion Test).

(2) Software. The embedded software should be qualified to an appropriate standard. The software level is contingent on the worst case criticality of the function it performs. As an example, the display of incorrect roll and/or pitch by an EFIS ADI instrument is a hazardous or “critical” malfunction. The software should be designed to provide adequate consideration for this factor (reference paragraph AC 29.1309). A similar consideration is required for altitude and airspeed.

(B) System Installation Consideration.

(1) Display Chromaticity and Luminance. The chromaticity and luminance of the displays should be determined to be acceptable for all critical cockpit lighting conditions which are expected in service. An expanded discussion of these characteristics may be found in AC 25-11.

(2) Temperature Survey to Determine Proper Cooling of EFIS Components.

(i) Equipment Requiring Cooling Test. As with any avionic equipment, good engineering judgment may deem that all components of the EFIS should have an in-flight temperature survey performed to ascertain that the thermal environmental tolerance of the system components is not exceeded. Usually, the following general guidelines may be used to aid in determining when an in-flight temperature survey is warranted.

(a) Components which contain a CRT require the temperature survey outlined in paragraph AC 29.1303b(4)(ii)(B)(1)(ii).

(b) Equipment which does not contain a CRT, but is specified by the manufacturer to require forced air cooling (by an airframe mounted system), usually requires a temperature survey.

(c) Equipment which does not contain a CRT and is not specified as requiring forced air cooling may usually have its critical thermal environment substantiated by laboratory testing.

(ii) Temperature Survey Testing. The temperature tests for the EFIS units should consist of a short-term test of approximately 30 minutes which accounts for an aircraft which has heat-soaked on the ramp. A factor of 25° F should be added to the maximum corrected temperature to account for "greenhouse effect." A long-term test should be accomplished at various altitudes and limiting (low and high) airspeeds. All avionic equipment should be turned on during this test, and the cockpit panel lights should be operated at full intensity. The environmental control unit (ECU) or air-conditioning system should not be operating during these tests; however, any windows or vents which are part of the "basic" TC rotorcraft may be utilized to ventilate the pilot's stations. Both these tests should be corrected to the maximum temperature for which the rotorcraft is certified and a standard lapse rate for altitude as specified in this AC. If an airframe cooling system is necessary to keep the display units within acceptable temperature limits, then the pilot(s) must be made aware of a failure or malfunction of this cooling system. Some type of cockpit visual annunciation with the capability to perform a preflight test is usually utilized to fulfill this requirement.

(3) System Reliability.

(i) Failure of the EFIS to perform a required function which results in the reversion to standby instruments or requires the use of abnormal procedures should be shown to be improbable (for Category A rotorcraft, reference § 29.1309(b)).

(ii) For IFR operations, Appendix B of Part 29, paragraph VIII(b)(5)(ii), requires that the equipment, systems, and installations must be designed so that one display of the information essential to the safety of flight which is provided by the instruments will remain available to a pilot, without additional crewmember action, after any single failure or combination of failures that is not shown to be extremely improbable. The display of attitude, altitude, or airspeed is individually "essential to the safety of flight," and, therefore, the loss of all attitude display, all airspeed information, or all altitude information to the pilot(s) should be extremely improbable. Also, any malfunction or failure of the EFIS which would result in the display of simultaneous incorrect display of this critical information should be extremely improbable. In view of the relatively new technology embodied in the EFIS, the conventional technology electromechanical standby attitude indicator, with its independent power supply, should be retained.

(4) Symbology and Function. When assessing the acceptability of the EFIS, consideration should be given to the effect of the loss of one of the CRT color

guns. This type of failure is especially a factor in determining the acceptability of the installation for single-pilot operation.

(5) Circuit Protective Devices. All circuit protective devices for the EFIS and related, required interface units should be placed in the cockpit where they can be reset by one of the pilots without leaving the pilot seat.

c. Standby Instruments. The EFIS which have been approved on transport category rotorcraft at this time have only presented the critical function of attitude display. A specific requirement for a standby attitude instrument is contained in Appendix B of Part 29. This requirement is usually satisfied by an electromechanical panel-mounted gyro with an independent power source. This type of installation is what was envisioned by the authors of Appendix B. Because of the mature technology of this type of standby attitude indicator, certain aspects of the EFIS installation have not been an area for concern. If, however, a total commitment of critical display functions is made to the “glass” technology, such that the standby attitude instrument requirement is satisfied by a software based CRT system, then several major areas of concern will be raised. Among these are the electromagnetic vulnerability of the system (protection from the effects of lightning and high energy radio frequency fields) and software. The certifications of EFIS with an electromechanical standby attitude indicator have not considered loss of function critical from a software aspect. (reference paragraph AC 29.1309 for a discussion of software qualification.)

AC 29.1305. § 29.1305 (Amendment 29-10) POWERPLANT INSTRUMENTS.

a. Explanation. This section specifies those instruments which are required for reciprocating and turbine engine installations. It also provides instrumentation requirements for operating rotorcraft in Category A or Category B. These instruments will provide the pilot with essential data to determine operational status of critical components and select desired performance conditions.

b. FAR 29.1305(a)(4), (a)(6), and (a)(9) requires a warning device for low fuel, gearbox oil pressure, and transmission oil temperature. An indicator/gage is not acceptable for use as a warning device since the indicator/gage is not a primary instrument and therefore is not actively monitored.

c. There are advanced display systems that take advantage of microprocessor power by integrating the processing of several parameters. These systems have to date been referred to as Engine Caution Advisory Systems (ECAS) or as Integrated Instrument Display Systems (IIDS) and possibly other variations of these names. These systems typically integrate propulsion instruments, fuel quantity indication, and caution and warning system into a single display system. In traditional designs the powerplant instruments, fuel quantity display, and the caution and warning system are independent from each other. The integration of these systems/indicators eliminates their independence from one another and increases the probability of loss of more than

one indicator/system as a result of a single fault or malfunction. Redundant design is generally applied to compensate for the loss of independence.

(1) This integration and resultant mitigation of independence can result in an increased opportunity for common mode failures. Approval of the compensating features is elevated in importance as it is this aspect that allows the concept to be acceptable and subsequently certifiable. The loss of all displayed information or erroneous information should be considered for determination of worst case criticality. With this determination of criticality, the design can be evaluated to see that it meets the minimum associated level of design assurance. Additionally, due to space limitations, some systems employ “page over” features that may have some difficulty displaying the required information when needed and human factors aspects must be considered.

(2) The instrument display system must be investigated and found to be acceptable under both normal and emergency conditions, must perform its intended function under foreseeable operating conditions, and must be designed to minimize the hazards in the event of probable malfunction or failure.

(3) It must be shown that there is appropriate redundancy to provide adequate compensation for the loss of independence in the system. If a multi-page system is employed, it must be shown that needed information is displayed when required. Specific issues that must be addressed to assure compliance with the minimum safety standards are as follows:

(i) The level of most severe hazard must be determined.

(ii) Equivalent reliability and software design assurance to the determined criticality level must be shown.

(iii) Pretest capability must be provided for the warning and caution system to preclude an associated latent failure.

(iv) Human Factors (reference §§ 29.1321 and 29.1322).

d. Additional rules to be consulted when determining the powerplant instrument installation design are §§ 29.1321, Arrangement and visibility; 29.1337, Powerplant instruments; 29.1381, Instrument lights; 29.1543, Instrument markings: General; 29.1549, Powerplant instruments; 29.1551, Oil quantity indicator; and 29.1553, Fuel quantity indicator.

AC 29.1305A. <u>§ 29.1305 (Amendment 29-26) POWERPLANT INSTRUMENTS</u>.

a. <u>Explanation</u>. Amendment 29-26 revises, edits, and adds new powerplant instrument requirements. Section 29.1305(a)(4) was revised to require a low fuel warning device for each tank that can be used to feed an engine. The amendment

allows a longer time between warning actuation and fuel exhaustion and requires the low fuel warning device to be independent of the normal fuel quantity indication system. Section 29.1305(a)(17) was changed to extend its application to all rotorcraft (not just those with turbine engines) and to require an indication to the crew of the degree of filter blockage as it relates to the fuel flow requirements in § 29.955.
Section 29.1305(a)(19) was revised to require function indicators only for fuel heaters that can be selected or are controllable. A new paragraph (a)(20) was added to § 29.1305 that combined identical requirements for fuel pressure indicators in paragraphs (b)(2) and (c)(2) and modified the applicability of these requirements to only those fuel systems with devices or components that could adversely affect fuel pressure at the engine, if they fail. It also eliminates the requirement for fuel pressure indicators in fuel systems, such as suction or gravity feed systems, which do not incorporate pumps or filters. A new § 29.1305(a)(21) was added that requires a warning device to indicate to the flight crew the failure of any fuel pump that is required to supply adequate fuel flow to the engine according to § 29.955; such indication is not required for fuel pumps which are demonstrated to be only necessary for engine starting. Section 29.1305(a)(22) adds a requirement for a warning or caution device to alert the flight crew when particles are detected by the chip detector required by § 29.1337(d). A new § 29.1305(a)(23) added a requirement for powerplant instruments or warning devices for auxiliary power units installed in rotorcraft.

b. Procedures. The requirement and purpose for each instrument is self-explanatory in the amendment. Other sections that should be considered when designing powerplant instruments are listed in paragraph AC 29.1305.

AC 29.1305B. 29.1305 (Amendment 29-34) POWERPLANT INSTRUMENTS.

a. Explanation. Amendment 29-34 added §§ 29.1305(a)(24) and 29.1305(a)(25) to provide for 30-second/2-minute OEI power ratings.

(1) Section 29.1305(a)(24) adds the requirement that a device or means be provided to alert the crew of the use of the 30-second and 2-minute OEI power level. The crew should be alerted when the 30-second or 2-minute interval begins and when the time interval ends. The amount of time spent at the 30-second or 2-minute OEI power levels is at the crew's discretion, unlike the other limits for 30-second OEI that are set by an automatic control required by § 29.1143. The purpose for providing the time interval alerts and automatically controlling the 30-second OEI limits is to free the crew from monitoring the engine instruments during critical phases of flight caused by the loss of an engine.

(2) Section 29.1305(a)(25) adds the requirement for a device to record the usage and the amount of time spent at the 30-second OEI power level and the amount of time spent at the 2-minute OEI power level. The information recorded by this device is for the use of the ground crew to determine if maintenance actions/inspections are to be conducted.

b. Procedures. For the purpose of complying with FAR 29.1305(a)(24) and 29.1305(a)(25), the 2-minute OEI power level is considered to be achieved whenever one or more of the operating limitations applicable to the next lower OEI power rating are exceeded. The 30-second OEI power level is considered to be achieved whenever one or more of the operating limitations applicable to the 2-minute OEI power rating are exceeded.

(1) A review of the method to meet the requirements of § 29.1305(a)(24) should be conducted by flight test personnel. A determination should be made as to whether the method used to alert the crew of 30-second or 2-minute OEI power usage can be recognized and understood by the crew.

(2) To meet the requirements of Section 29.1305(a)(25), a device should be installed on the engine or the airframe to record the time and each usage of 30-second and 2-minute OEI power levels. The information on the time and usage of 30-second and 2-minute OEI power should be recoverable from the recording device by ground personnel. The device should not be capable of being reset in flight and should only be capable of being reset by ground personnel. Prior to each flight this device should be capable of being checked for proper operation and to determine if 30-second or 2-minute OEI power levels were used during the previous flight.

c. Integrated Display Systems. This advisory material is to provide guidance for compliance to Part 27 and Part 29 regulations as they apply to integrated display systems. The integration aspects of these systems require some additional issues to be addressed during certification. The term “must” in this advisory material is used in the sense of ensuring the applicability of these particular methods of compliance when the acceptable means of compliance described herein is used. This advisory material establishes an acceptable means, but not the only means of certifying an integrated display system.

(1) Definitions.

(i) Integrity. The term “integrity” for the purpose of this advisory material includes the hardware quality requirements, including reliability; as well as the software level requirements, as defined in DO178B.

(ii) Criticality. The term “criticality” refers to the five levels of criticality addressed in FAA Advisory Circulars AC 27-1B and AC 29-2C.

(2) Related documents.

(i) Federal Aviation Regulations (FARs) paragraphs 21.21, 29.1301, 29.1309, 29.1305, and 29.1322

(ii) Standards - Latest revision of RTCA/DO178 and RTCA/DO-160; SAE documents

(iii) ARP4754 and ARP4761

(3) Background. A tendency to integrate functions/indications that have previously been independent is a result of technology advancement. Microprocessor driven systems have facilitated the ease of this integration. Integrated Instrument Display System (IIDS) or Engine Instrument and Caution Advisory System (EICAS) are examples of integrated display systems. IIDS, EICAS, or any other similar systems are defined as a combination of engine instruments (previously independent indicators), fuel quantity indication, and caution/warning parameters, as a minimum, presented by a common display driven by a common processor.

(4) Discussion. This design philosophy does not result in the traditional requirement for individual display independence for failure/malfunction considerations. This loss of independence means that a single failure could result in loss of most, if not all, instrument displays on the integrated display system. Redundancy of the integrated display system is often proposed to compensate for this lack of independence. However, redundancy alone may not meet the integrity requirements since they are derived from the level of criticality associated with the loss or malfunction of instrument/parameter displays for flight operations that are dependent on these indications.

(5) Certification Approach. A two step procedure should be used to determine the adequate safety level for this type of system. The first step is to determine the level of criticality associated with the total loss/malfunction of these functions/indications or loss/malfunction of the critical parts of the display. This can be achieved through the use of a functional hazard assessment (FHA). This criticality assessment must be a product of failure/malfunction of the indication system and the flight operation that would represent the worst case for loss of this information. The second step is to determine that the design integrity of the system is at least equal to the assessed criticality level determined in step one.

(6) Functional Hazard Assessment. The operational classifications to be considered when assessing the criticality are Cat A, Cat B, and IFR. The need for critical information varies with each of these different operational categories. An example would be the demand for OEI parameter information in the single engine Cat A operation. Another example is the loss of fuel quantity indication and fuel low level indication simultaneously in IFR flight conditions. The FHA should address not only loss of one type of indication, but combined loss of engine parameter indication, including total loss of display information, caution/warning, fuel quantity indication, and any other included display in combination with a particular flight operation. There are techniques to lessen the consequences of the failure/malfunction requirements for integrity, such as providing back-up displays for the information deemed critical for a particular operational consideration.

(7) Summary. The loss of all integrated display information for certain types of flight operations may have the highest level of criticality associated with it. The same may be true for malfunctions that result in misleading indications. These failures/malfunctions must be addressed by the commensurate design integrity level. Lesser levels of criticality must also be addressed by the appropriate design integrity levels.

AC 29.1305C. § 29.1305 (Amendment 29-40) POWERPLANT INSTRUMENTS.

a. Explanation. Amendment 29-40 added section 29.1305(a)(6) to require an oil pressure indicator for each pressure-lubricated gearbox. Paragraphs (a)(6) through (a)(25), prior to this amendment, have been redesignated as paragraphs (a)(7) through (a)(26).

b. Procedures. In addition to providing an oil pressure indicator for each pressure-lubricated gearbox, the guidance material of the previous AC 29.1305 paragraphs continues to apply.

AC 29.1307. § 29.1307 (Amendment 29-12) MISCELLANEOUS EQUIPMENT.

a. Explanation. This rule provides a listing of several items of required miscellaneous equipment. Each item seems to be self-explanatory except the one requiring a master switch arrangement for electrical circuits other than ignition. The purpose of a master switch arrangement is to allow rapid removal of all bus loads from sources of electrical power in an emergency situation.

b. Procedures. When reviewing possible solutions to the master switch arrangement requirement, the following considerations should be included.

(1) System separation. Since wiring from each electrical system will be brought in close proximity to each other, extra care should be taken to maintain some separation. As examples, common connectors, common grounds, and common wire routing should be avoided.

(2) Installation of switches. The single switch should be avoided since it introduces the possibility of a single failure turning off the entire electrical system. One solution that is commonly used provides a close grouping of the switches such that the pilot can easily reach all switches and turn them all off with one action. This solution requires a cockpit evaluation to ensure the installation will be suitable for different hand sizes. Another solution involves a gang bar that can be moved with a single motion to turn off all sources. This solution has been found to be acceptable in several instances. Other solutions should be evaluated on their own merits, and the primary emphasis should be on maintaining some minimum system separation and conducting a cockpit evaluation by flight test personnel.

AC 29.1309. § 29.1309 (Amendment 29-40) EQUIPMENT, SYSTEMS, AND INSTALLATIONS.

a. Types of Equipment. This regulation covers, but is not limited to electrical, pneumatic, and hydraulic power sources, associated distribution, and corresponding utilization systems.

b. Environmental Qualification.

(1) Laboratory Tests.

(i) Environmental Standards. In order to assure that the components/systems under consideration will function properly when exposed to adverse environments, they should be tested in the laboratory under a simulated adverse environment. If a TSO exists and it is appropriate in environmental range and performance for an equipment installation, it is preferable the equipment be TSO approved. If there is no applicable TSO or an existing TSO does not provide for a sufficiently adverse environment, the latest revision of the Radio Technical Commission for Aeronautics (RTCA) document DO-160 is an acceptable environmental standard for laboratory qualification of aircraft equipment.

(ii) Adverse environmental variables for all types of required and critical equipment include, but are not necessarily limited to temperature, humidity, vibration, shock, altitude, overpressure, and power source transients.

(iii) For electrical/electronic equipment, adverse environmental variables include all of (b) above plus overvoltage and undervoltage. Electronic equipment should also be tested for electromagnetic interference (EMI). These tests should include both emission and susceptibility evaluations of both conducted and radiated EMI.

(iv) Explosion Tests. Those items of electrical/electronic equipment that are to be located in areas subject to flammable fluids and vapors, as a result of any single probable malfunction or failure, including failure of couplings or lines should be tested as an ignition source. These tests consist of normal operation of the equipment in a physically contained explosive atmosphere. The explosion test procedure in the latest revision of DO-160 will satisfy this requirement. Paragraph AC 29.863 provides further guidance on safety from explosion. If another standard is used that is at least as good as the latest revision of DO-160, it may also be accepted to satisfy this requirement.

(2) Installed Environmental Tests. After the environmental ratings of the components/systems have been established, it should be assured that as installed, these ratings will not be exceeded. Normally, installed equipment need not be instrumented and tested in flight nor is it necessary to instrument the compartment or rack where the equipment is installed. Satisfactory environment and equipment

compatibility are assured by selection of the proper environmental category of laboratory tests. The category is determined by the type of aircraft (reciprocating or turbine) and flight envelope (altitude and temperature). Exceptions to normal installations are (a) Alternator/generator cooling, where radiated and conducted heat is almost always uncertain, also cooling air temperatures and flow rates are uncertain; (b) Where flight tests reveal excessive instrument panel vibration. In this case, the panel should be instrumented, tested, and, if necessary, design improvements made; and (c) Any other cases where good engineering judgment and application of sound engineering principles indicate a high likelihood that the installed environment is more severe than the equipment is capable of operating within.

(i) Temperature Tests.

(A) Temperature tests may be accomplished by instrumenting the installed equipment environment with a recorder that provides a permanent record of time, altitude, and temperature. The pertinent temperature should be recorded as the rotorcraft is operated throughout its altitude range, including ground operation. The maximum and minimum temperatures recorded should be corrected degree for degree to assure the equipment under test remains within its temperature rating while the rotorcraft operates throughout its approved ambient temperature envelope. (For generator/alternator cooling test procedures, refer to paragraph AC 29.1351.) Section 29.1043, paragraph (b) requires the maximum approved operating OAT to be at least 100° F for powerplant-mounted accessories such as starter generators, vacuum pumps, etc. Due to the impracticality of the 100° F hot day temperature limit, rotorcraft systems mounted on the powerplant are normally evaluated for at least 115° F hot day sea level conditions with corresponding 3.6° F/1,000-foot correction. The maximum hot day OAT at sea level must be specified in the rotorcraft flight manual. Section 29.1043, paragraph (b) is the regulatory basis for the lapse rate of 3.6° F/1,000 feet. This lapse rate should be applied regardless of the hot day sea level temperature the applicant chooses to certify for operation.

(B) The § 29.1043 paragraph (b) maximum ambient temperature definition should not be confused with operating temperatures in closed areas. Closed equipment rack areas can easily reach temperatures of 140° F when sitting on the ramp in the southern United States in midsummer. Normally, proper selection of the altitude temperature category in the latest revision of DO-160 will assure compliance.

(C) In some cases, the equipment manufacturer furnishes temperature limits for internal critical parts. For example, brushes, bearings, or field windings on DC generators. In these cases it is better to record the critical component temperature rather than equipment or equipment environment temperature.

(D) The following will illustrate an acceptable high temperature evaluation method:

$T_{OAT\ MAX}$ = Maximum outside air temperature at which temperature tests are conducted.

T_{MAX} = Maximum temperature to which the installed equipment has been tested in the laboratory.

$T_{TEST\ MAX}$ = Maximum installed equipment temperature recorded during tests.

T_{ORH} = The high reference outside air temperature. It varies with altitude starting at the highest sea level temperature at which rotorcraft operation is to be approved and decreases at 3.6° F/1,000 foot altitude. It can be no less than 100° F (reference § 29.1043(b)); however, it can be as high as the applicant wants.

$T_{H\ MAR}$ = Temperature margin between the maximum equipment temperature substantiated in the laboratory and the maximum installed equipment temperature when the rotorcraft is operating in the highest available OAT and approximately corrected at the altitude under consideration. If the margin is zero or positive, the equipment passes. If the margin is negative, the equipment fails the test.

$$T_{H\ MAR} = T_{MAX} - (T_{TEST\ MAX} + (T_{ORH} - T_{OAT\ MAX}))$$

<u>Example #1</u>: Assume the applicant is seeking approval for rotorcraft operation at the lowest acceptable OAT, at sea level, of 100° F and T_{MAX} for Generator Brush = 295° F at maximum load current throughout the altitude range. In-flight test data are:

Altitude (ft, MSL)	Measured Brush Temp ($T_{TEST\ MAX}$)	OAT = $T_{OAT\ MAX}$
sea level	275° F	90° F
5,000	270° F	80° F
10,000	285° F	60° F
15,000	294° F	42° F
20,000	290° F	20° F

First, T_{ORH} must be calculated for each altitude test point.

@ sea level, T_{ORH} = 100° F
@ 5,000 ft., T_{ORH} = 100° F -5,000 ft., x 3.6°/1,000 ft. = 82° F
@ 10,000 ft., T_{ORH} = 100° F - 10,000 ft. x 3.6°/1,000 ft. = 64° F
@ 15,000 ft., T_{ORH} = 100° F - 15,000 ft. x 3.6°/1,000 ft. = 46° F
@ 20,000 ft., T_{ORH} = 100° F - 20,000 ft. x 3.6°/1,000 ft. = 28° F

Then at sea level:

$T_{H\ MAR}$ = 295 - (275 + (100 - 90))

At 5,000 feet:

$T_{H\ MAR}$ = 295 - (270 + (82 - 80)) = 23° F

At 10,000 feet:

$T_{H\ MAR}$ = 295 - (285 +(64 - 60)) = 6° F

At 15,000 feet:

$T_{H\ MAR}$ = 295 - (294 + (46 - 42)) = -3° F

At 20,000 feet:

$T_{H\ MAR}$ = 295 - (290 + (28 -20)) = -3° F

Since $T_{H\ MAR}$ comes out negative at the 15,000- and 20,000-foot points, the generator fails. It will be necessary for the applicant to reduce the maximum load current, improve cooling, or otherwise change the design to assure the generator is operating within its approved temperature limit of 295° F.

(E) In most cases, the equipment is laboratory tested to minimum temperatures as severe as that of the rotorcraft's maximum certified altitude on a minimum temperature day. Therefore, unless equipment minimum temperature is affected by refrigeration or other temperature reducing environments, actual installed

instrumented minimum temperature tests are unnecessary. If low temperature evaluation is necessary for the installed equipment, the following is an acceptable method:

$T_{OAT\ MIN}$ = Minimum outside air temperature at which temperature tests are conducted.

T_{MIN} = Minimum temperature to which the installed equipment has been tested in the laboratory.

$T_{TEST\ MIN}$ = Minimum installed equipment temperature recorded during tests.

T_{ORL} = The low reference outside air temperature. It varies with altitude starting at the lowest sea level temperature at which rotorcraft operation is to be approved and decreases at 3.6° F/1,000-foot altitude.

$T_{1\ MAR}$ = Temperature margin between the minimum equipment temperature substantiated in the laboratory and the minimum installed equipment temperature. If the margin is zero or positive, the equipment passes. If the margin is negative, the equipment fails the test.

$$T_{1\ MAR} = -(T_{MIN} - (T_{TEST\ MIN} + (T_{ORL} - T_{OAT\ MIN})))$$

NOTE: This equation assumes all temperatures are negative. It is necessary to place a (-) in front of the right side of the equation in order to convert the $T_{1\ MAR}$ value to the conventional positive answer for acceptance and a negative answer for rejection. Temperature in the 0 to 32° F range can be handled by conversion to the centigrade scale.

Example #2: Assume the applicant is seeking a low temperature operating limit at sea level of -25° F. Assume the hydraulic control cylinder has been substantiated in the laboratory to operate at a cylinder temperature of -40° F. The in-flight test data are:

Altitude (ft, MSL)	Measured Cylinder Temp ($T_{TEST\ MIN}$)	OAT = $T_{OAT\ MAX}$
sea level	0° F	-25° F
5,000	-9° F	-45° F
10,000	-21° F	-59° F
15,000	-32° F	-65° F
20,000	-40° F	-69° F

(T_{orl} must be calculated for each altitude test point)

@ sea level, T_{ORL} = -25° F
@ 5,000 ft., T_{ORL} = -25° F -5,000 ft., x 3.6°/1,000 ft. = -43° F
@ 10,000 ft., T_{ORL} = -25° F - 10,000 ft. x 3.6°/1,000 ft. = -61° F
@ 15,000 ft., T_{ORL} = -25° F - 15,000 ft. x 3.6°/1,000 ft. = -79° F*
@ 20,000 ft., T_{ORL} = -25° F - 20,000 ft. x 3.6°/1,000 ft. = -97° F*

*According to § 29.1043(b), the lowest temperature to be considered is -69.7° F.

Then at sea level:

$T_{1\ MAR}$ = -(-40 -(0 + (-25 -(-25)))) = 40° F

At 5,000 feet:

$T_{1\ MAR}$ = -(-40 - (-9 + (-43 - (-45)))) = 33° F

At 10,000 feet:

$T_{1\ MAR}$ = -(-40 - (-21 + (-61 - (-59)))) = 17° F

At 15,000 feet:

$T_{1\ MAR}$ = -(-40 - (-32 + (-69.7 - (-65)))) = 3.3° F

At 20,000 feet:

$T_{1\ MAR}$ = -(-40 - (-40+ (-69.7 - (-69)))) = -0.7° F

It can be seen that there is an acceptable margin at all altitudes up to and including 15,000 feet. However, at 20,000 feet, the margin is negative and the system fails.

(ii) Vibration tests. Normally, installed vibration tests are not necessary for equipment qualified in accordance with the latest revision of RTCA document DO-160. This paper categorizes vibration tests according to installed rotorcraft equipment location such as fuselage, engine compartment, instrument panel, equipment rack, etc. However, installed equipment vibration tests may be necessary when it appears the equipment location environment may exceed the laboratory-tested equipment vibration limits.

(iii) Altitude tests. If the equipment has been laboratory tested to the maximum certified altitude of the rotorcraft, installed altitude tests are unnecessary. The installed equipment must be either laboratory tested or tested in the rotorcraft to the maximum certified altitude of the rotorcraft.

(3) Lightning Strike Protection of Full Authority Digital Engine Controls.

(i) Explanation.

(A) The following discussion is written specifically for full authority digital engine controls (FADEC) with an alternate technology backup fuel control installed on rotorcraft with Category A engine isolation. The requirement for increased consideration of lightning strike encounter effects on avionic equipment and systems has been brought about by the increased use of avionics to perform functions, the failure or malfunction of which could result in a hazard to the rotorcraft. The susceptibility of current high technology avionic systems is increased by the use of large scale integration (LSI), very large scale integration (VLSI), and complementary metallic oxide silicon (CMOS) technologies which exhibit a greatly reduced tolerance to large amplitude, low energy electrical transients as compared to conventional bipolar technology, and the reduced physical protection and electromagnetic shielding afforded aircraft avionic systems by the advanced technology composite airframe materials. Additionally, processor-based systems have the failure phenomenon of digital upset. A digital upset occurs when a system, perturbed by an electrical transient, ceases proper operation in accordance with its embedded software while suffering no apparent component or device damage.

(B) Since elements of electrical/electronic engine subsystems are typically spread throughout much of the rotorcraft, transients caused by lightning are coupled into the subsystem interface cables and may damage the system or cause upset. Effective lightning protection must be designed and incorporated into these systems. Reliance upon redundancy as a means of protection against lightning effects is generally not adequate because lightning electromagnetic fields and structural IR voltages usually interact (to some extent) with all electrical wiring aboard a rotorcraft.

(C) The testing and analysis outlined in this discussion are methods by which the FAA/AUTHORITY may be assured that when the rotorcraft experiences “the foreseeable operating condition” of a worst-case lightning strike encounter that the electronically controlled engines will continue to “perform their intended function” and therefore be in compliance with § 29.1309(a) as installed.

(D) The definition of what constitutes a full authority engine control is not at this time clearly defined. However, it has been accepted in past certification that any control which relies upon the electronics for the function on which Civil Certification or Military Qualification is based (e.g. rotor speed governing) is a full authority control, regardless of the backup control mode provided. If engine certification or qualification can be achieved without the electronic control which is subsequently added to achieve improved operational efficiency in the aircraft, the control is “supervisory.” However, if the controls are used in a multiengine rotorcraft, a common failure caused by a lightning strike could result in simultaneous failures which would cause a reduction in power greater than the loss of one engine. This would also be considered “full authority.”

NOTE: If OEI ratings are approved, cumulative loss of power from all engines should be limited to allow flight manual performance based on OEI ratings.

(ii) Procedures. Although not a regulatory requirement, it is recommended that a formal written certification plan be used to assure regulatory compliance. The use of this plan is beneficial to both the applicant and the FAA/AUTHORITY because it identifies and defines an acceptable resolution to the critical issues early in the certification process. These are the usual steps to be followed when utilizing a certification plan:

(A) Prepare a certification plan which describes the analytical procedures and/or the qualification tests to be utilized to demonstrate protection effectiveness. Test plans should describe the rotorcraft and FADEC system to be utilized, test drawing(s) as required, the method of installation that simulates the production installation, the lightning zone(s) applicable, the lightning simulation method(s), test voltage or current waveforms to be used, diagnostic methods, and the appropriate schedules and location(s) of proposed test(s).

(B) Obtain FAA/AUTHORITY concurrence that the certification plan is adequate.

(C) Obtain FAA/AUTHORITY detail part conformity of the test articles and installation conformity of applicable portions of the test setup.

(D) Schedule FAA/AUTHORITY witnessing of the test.

(E) Submit a final test report describing all results and obtain FAA/AUTHORITY approval of the report.

(iii) Definition of Environment. The SAE AE4L Committee report dated June 20, 1978, is an acceptable criteria to define the worst-case lightning strike which may be encountered by the rotorcraft in service. An additional explanation of the lightning environment may be found in FAA Report DOT/FAA/CT-89/22, “Aircraft Lightning Protection Handbook.” This handbook will assist aircraft design, manufacturing, and certification organizations in protecting aircraft against the direct and indirect effects of lightning strikes, in compliance with Federal Aviation Regulations. It presents a comprehensive test criteria to provide the essential information for the in-flight lightning protection of all types of fixed/rotary wing and powered lift aircraft of conventional, composite, and mixed construction and their electrical and fuel systems. The handbook contains chapters on the natural phenomenon of lightning, the interaction between the aircraft and the electrically charged atmosphere, the mechanism of the lightning strike, and the interaction with the airframe, wiring, and fuel system. Further chapters cover details of designing for optimum protection; the physics behind the voltages, currents, and electromagnetic fields developed by the strike; and shielding techniques and damage analysis. The handbook ends with discussion of test and analytical techniques for determining the adequacy of a given protection scheme.

On March 5, 1990, FAA Advisory Circular AC 20-136, “Protection of Aircraft Electrical/Electronic Systems Against the Indirect Effects of Lightning,” was issued. Appendix 3 of that document contains an updated quantification of the severe natural lightning environment. Additionally, an AIR-100 policy letter, dated August 25, 1993, addressing multiple burst lightning strikes, should be considered. It is recommended that for new designs and applications after March 5, 1990, this revised definition of the lightning be used.

(iv) Certification Plan. The following subjects are not intended to provide a complete list of the items which should be included in the certification plan, but rather highlight some of the areas which should receive consideration. The certification plan should address the total protection which is required to allow the FADEC to continue to operate properly when the rotorcraft experiences a worst-case lightning strike encounter.

(A) Determination of Lightning Strike Attachments. Determine the locations on the rotorcraft where lightning strike attachment is likely to occur and the portions of the airframe through which currents may flow between attachments. The main and tail rotors are recognized as likely attachment points; however, consideration should be given to all possible attachment points. The swept stroke phenomenon may not exist for all lightning strike encounters due to the fact that the rotorcraft may be airborne with little or no airspeed.

(B) Establish the Lightning Environment. Establish the components of the total lightning event to be considered. These are the currents and voltages which are described in the definition of the environment.

(C) Full-Level, Complete Vehicle Testing. In accordance with traditional FAA/AUTHORITY Policy, the demonstration that the FADEC installed in a complete type design rotorcraft will continue to operate properly when exposed to a worst-case lightning strike is sufficient to demonstrate compliance with § 29.1309(a). Because of the difficulties involved in utilizing this type of an approach, it is generally not used.

(D) Analytical Processes. A description should be given in the certification plan of the analytical process and/or certification tests to be utilized to demonstrate protection effectiveness. Typically, the certification plan will include a combination of analysis and tests. (Analytical techniques are most often utilized to predict the levels of lightning-induced transients in interconnecting wiring.) In most cases, successful analyses are based upon well-defined geometrical or electrical parameters such as structural dimensions and materials resistivities. When electrical characteristics of structural materials are not well established, development tests are often utilized to obtain this data which is subsequently utilized in an analysis. In more complex structures and/or electrical/electronic system installations, it is sometimes difficult or impossible to define the problem in terms that can be analyzed. In these cases, development or verification testing is often relied upon. The purpose of the certification plan is to show how developmental tests, analyses, and verification tests

are combined to demonstrate protection design adequacy. In certain cases, previously verified designs can be incorporated and their adequacy confirmed by reference to previous verifications. Such reference should also be incorporated in the certification plan.

(1) The verification testing should be conducted on a system which simulates as closely as possible the installed configuration. As few items as possible of actual hardware should be simulated.

(2) The use of various analytical processes usually requires that the system component tolerance is established. The SAE AE4L Committee Report No. AE4L-81-2 is the recommended reference to be used for the testing accomplished to determine these tolerances. The testing which is performed to determine the tolerance level of the control computer should include a consideration for the occurrence of a nonrecoverable digital upset. One method to provide this consideration is to have the unit powered and the processor operating normally under software control (usually this should be the exact software for which approval is sought) when the test is performed. If strike testing is used, then several shots should be made to develop enough data to provide a reasonable confidence level. It is an acceptable procedure for the engine manufacturer, while he is obtaining his type certificate, to accomplish this bench testing to determine the level of tolerance of the FADEC system components to lightning encounter indirect effects. This approach has the advantages that the bench tests are not necessarily required to be repeated when the engine is installed in a different airframe. This recommendation is not meant to add a requirement to the engine manufacturer but to propose a more efficient method of certification. If this tolerance was not determined by the engine manufacturer, the applicant installing the FADEC in a rotorcraft would be expected to furnish this data.

(3) For complete airframe verification testing, a minimum level of at least 1KA peak and a current rise time of 2KA/microsecond are recommended. It is often difficult to obtain valid results at lower levels due to poor signal-to-noise ratios. When complete vehicle testing is accomplished at some lower level, or through some alternate test technique such as low level swept CW testing, consideration should be given to nonlinear airframe response, diffusion effects, and alterations in current paths caused by arcing and flashover.

(4) As with any analytical method, it is prudent to include a margin of safety to account for the uncertainties involved in the analytical and testing processes. A level of 6 dB is recommended for those analyses which are confirmed by the use of reduced level, full-scale vehicle testing. This safety margin is the difference between the airframe installed system responses and the system component tolerance, not an adjustment to the quantification of the atmospheric environment. (The airframe system response to the worst-case lightning event should be at least 6 dB less than the FADEC system computer and components tolerance level. Number of dB is defined as $20\ LOG_{10}\ (V_1/V_2)$ and $20\ LOG_{10}\ (I_1/I_2)$ where V_1 and I_1 are the determined tolerance levels of the system components and V_2 and I_2 are the extrapolated airframe response.)

(5) When an analysis has no associated full-scale vehicle testing to confirm the analysis, the analysis should be very rigorous. Additionally, it should be expected in this situation that this analysis indicates a very large margin of protection. Many factors must be considered in determining what constitutes an acceptably large margin. The specific additional margin required should be based on an assessment of the inherent uncertainty of a given analysis. Approximately an additional 25 dB of protection has been deemed acceptable for a reasonably rigorous analysis performed on an airframe for which the response characteristics are known.

(E) Pass/Fail Criteria. The certification plan should address a pass/fail criteria for the testing and analysis to be performed. The following items should be satisfied to assure acceptable system performance:

(1) No immediate crew action must be required.

(2) Automatic control of the engine cannot be lost for any appreciable period of time. The engine must not be allowed to be out of control for a period of time which will result in a hazard in a worst-case flight condition. Obviously, any rapid, uncontrolled divergence is not acceptable.

(3) No crew action should be required to reset the system. This is not to imply that the system cannot be designed with a manual reset, but the manual reset cannot be used to show compliance to recover from a digital upset.

(4) The resumption of engine control after an upset must be reasonably within the range which existed before the upset.

(5) No critical data can be lost.

(6) After the system recovers, if the performance of the system has been degraded in a noncritical manner which would reduce the capability of the rotorcraft or the ability of the pilot to cope with adverse operating conditions, then the crew must be alerted to this system degradation.

(v) System Installation Considerations. In most cases, the installation of the system components is a constituent part of the lightning protection. This is particularly true in the use of shielding techniques. If these installation features are required for adequate lightning protection, consideration should be given to ensure that their effectiveness is not derogate in service. Information should be made available to the parties who service and operate the rotorcraft to allow them to take actions necessary to ensure the continued effectiveness of the system lightning protection.

(4) Lightning Protection.

(i) Background. During the original design and development of rotorcraft and the development of regulations concerning these aircraft, little attention was given to protection from the meteorological phenomenon of lightning. This was, in part, because the early aircraft were constructed mostly of metal and had little, if any, dependence on advanced technology systems. Contemporary design transport category rotorcraft are utilizing the same advanced technology systems and materials as transport category airplanes. Because of this fact, a specific requirement has been added by Amendment 29-24 for the consideration of lightning strike protection of required systems, equipment, and installations. The addition of paragraph (h) to § 29.1309 further defines the consideration required for the foreseeable operating condition of a lightning strike encounter on the rotorcraft.

(ii) Procedures.

(A) Section 29.1309(h) requires, when showing compliance with § 29.1309(a) and (b), that the effects of lightning strikes on the rotorcraft be considered.

(1) The first step in demonstrating compliance is to perform a fault/failure analysis (F/FA) to identify those functions for which the loss of function or malfunction may result in a catastrophe to the rotorcraft. An F/FA should be conducted on each system whose failure to function properly would prevent the continued safe flight and landing of the rotorcraft. These systems should be designed and installed to ensure that they can perform their intended function during and after exposure to lightning.

(2) Additionally, evaluation must be performed to identify each system whose failure to function properly would reduce the capability of the rotorcraft or the ability of the flight crew to cope with adverse operating conditions. These systems should be designed and installed to ensure that they can perform their intended function after exposure to lightning.

(3) The lightning strike models to be used for system justification should be as described in SAE AE4L Committee Report AE4L-87-3, Rev. B, dated January 1989 (or later version). The recommended reference for performing such analysis is Society of Automotive Engineers, Aerospace Recommended Practice 926A.

(B) Detailed means of compliance should be agreed with the authorities taking into account the effects on the rotorcraft and minimum considerations are as follows:

(1) Any combination of analysis and testing should be agreed with the authority.

(2) For test results, an extrapolation of the threat current parameters of more than a factor of 200 is not recommended for full scale low level pulse testing, due to the difficulty of obtaining valid results with poor signal-to-noise ratios.

(3) For a proven analysis technique, a safety factor of at least 2 will be necessary.

(C) Flight and engine controls are examples of “critical” functions and with these critical functions defined, an analysis and/or testing should be performed to show compliance with § 29.1309(a); i.e., equipment, systems, and installations performing those identified functions should be designed and installed to ensure that they continue to perform their intended functions considering the conditions of the rotorcraft experiencing a worst-case lightning strike encounter. Section 29.610 contains some methods which may be utilized for less complex mechanical systems; however, a great deal of difficulty will be experienced in trying to use these criteria to demonstrate that a very complex avionic system complies with § 29.1309(a). These avionic systems thus identified usually only require protection from indirect effects of lightning. If it is determined such is the case, then a method as outlined in paragraph AC 29.1309b(3), Lightning Strike Protection of Full Authority Digital Engine Controls, is recommended. This method may be readily adapted to other avionic systems performing critical functions. Also, this identifies an acceptable quantification of the expected airborne environment. The next step involves expanding the F/FA to determine if the malfunctioning of several “essential” systems in relation to other systems would result in a hazard to a Category B rotorcraft or preclude the continued safe flight and landing of a Category A rotorcraft. If groups of functions are so identified, sufficient lightning protection should be provided to prevent a hazardous malfunction situation on Category B rotorcraft or provide those conditions which prevent continued safe flight and landing on a Category A rotorcraft are extremely improbable. In performing this part of the analysis, attention should be given to the fact that many of the required equipment, systems, and installations may fail simultaneously with other required equipment, systems, and installations and result in a reduction of the capability of the rotorcraft but still not result in a catastrophe. An example of required equipment for which the simultaneous failure of all the required equipment is catastrophic is a failure which results in a total loss of attitude display for IFR certified rotorcraft operating in instrument meteorological conditions. Note that the analysis which is utilized to demonstrate that these failures are extremely improbable should have the encounter with a worst-case lightning strike as a given event; i.e., probability is unity. Additionally, for a Category A rotorcraft, an autorotation is not considered continued safe flight and landing.

c. Failure Analyses.

(1) Power and distribution systems should be analyzed to show compliance with § 29.1309.

(i) One acceptable procedure for documenting the analysis is contained in Society of Automotive Engineers (SAE) Fault/Failure Analysis Procedure ARP 926A, revised November 15, 1979.

(ii) As a minimum, any analysis should consider the effect of failures of components and systems on the capability of the rotorcraft to perform its intended function without hazard.

(iii) The analysis should consider the indication of failure. Those latent failures that occur without indication should be considered in all possible sequences and combinations of additional failures until a positive indication of failure is provided.

(iv) The analysis should consider failure of indirectly related parts of installations which could induce failure in the system being analyzed. For example: the effect of hydraulic fluid sprayed on electrical components as a result of a ruptured hydraulic line. Another example is the result of a ruptured bleed air line and its effect on hydraulic, fuel, or electrical lines/cables.

(v) The Type Inspection Authorization (TIA) should call for specific simulated failures, evaluation of failure detection, failure warning, and performance of the remaining system on the ground and in-flight to verify the critical aspects of the failure analysis. The applicant should provide a proposed detailed test procedure for incorporation in the TIA to accomplish this verification. The applicant's proposed tests simulating in-flight failures should be carefully reviewed by both the systems engineer and flight test pilot to assure the flight test crew will not be subjected to hazardous flight. Where practicable those simulated failures that would be hazardous in flight should be evaluated by ground tests. Analyzed and tested systems (where functioning is required) exhibiting hazards or failing to perform their intended functions under any foreseeable operating conditions must be redesigned to comply with § 29.1309.

(2) Utilization systems that are required or critical as to performance of intended function or result in rotorcraft hazard upon failure should also be analyzed for failures by the procedures of paragraphs c(1)(a) through c(1)(d) above. Examples of systems which may be critical are autopilots, hydraulic control systems, navigation and flight instruments on IFR approved rotorcraft, and bleed air systems.

d. Safety Assessment. Caveat: The safety assessment process that contains the Functional Hazard Assessment addressed herein is a methodology of general application to show compliance for systems, and all or parts of it may be applied as necessary depending on the complexity of design. The concept of safety assessment is provided by SAE document ARP 4754, "Systems Integration Requirements" and this aspect of this document is endorsed as an acceptable way of showing compliance to the requirements for function/design assurance. SAE document 4761, "Safety Assessment Guidelines for Civil Airborne Systems and Equipment" can be used as a guide to perform the different analysis that forms the safety assessment. The starting point is a Functional Hazard Assessment (FHA) that identifies the critical functions and in turn the systems or parts of systems that provide these critical functions. Further analysis is directed to be performed on the identified sources of these functions (i.e., system(s) performing these function(s)). One of the most common directed analysis is the reliability analysis (Failure Mode and Effects Analysis) and it is a bottom-up

analysis. The safety assessment process consists of several different types of analysis; only two are addressed by this AC at this time. The other analysis will be addressed in a future revision of this AC.

(1) Functional Hazard Assessment. The FHA is a top down assessment that, on an aircraft level, starts at flight operations and identifies the criticality levels associated with the malfunction/ failure of functions that can have safety effects. The source of these functions is also identified by the FHA. There are five criticality levels defined in subparagraph f, ”Computer Software” of this paragraph as they pertain to FAR Part 27 and 29. These level definitions are used in the FHA to decide which level matches the malfunctions/failures under consideration. The bottom-up analysis is then directed to the identified function source. Reliability analysis is the most common of the bottom-up analysis.

(2) Reliability Analyses. Numerical Reliability Analyses may be developed, on an optional basis, as a continuation of the failure analysis procedure.

(i) Specific reliability numbers are not shown in § 29.1309. The necessary degree of reliability is a function of the criticality of the system under consideration. Acceptable sources of component failure rates are (1) military service records or handbooks, such as MIL-HDBK-217C, (2) operator or manufacturer service records, such as airline records on sufficiently similar component designs, and (3) laboratory life tests.

(ii) For the purpose of conducting or evaluating an analysis, the following terms and numerical values should apply:

(A) FLIGHT TIME (Block Time). The time from the moment the rotorcraft first moves under its own power for the purpose of flight until the moment it comes to rest at the next point of landing.

(B) PROBABILITY CLASSIFICATIONS. Five probability classifications are defined below, although the rules refer to three. This is not considered a problem as long as the conversion below is applied, and it is recognized that only the divisions within the same range are different. Quantitative ranges are also provided as a common point of reference if numerical probabilities are used. The quantitative ranges given for these classifications are considered to overlap due to the inexact nature of probability estimates. When assessing the acceptability of a failure condition using a quantitative analysis, the numerical ranges given below should normally be interpreted to be the allowable risk for an hour of flight time based on a flight of mean duration for the rotorcraft type. However, when assessing a function which is used only at a specific time during a flight, the probability of the failure condition should be calculated for the specific time period and expressed as the risk for the flight condition, takeoff, landing, etc., as appropriate.

(1) FREQUENT. (This is the lower part of the range 10^{-5} or greater previously applied to the term "PROBABLE".) Frequent events may be expected to occur several times during the operational life of each rotorcraft, that is based on a probability on the order of 10^{-3} or greater.

(2) REASONABLY PROBABLE. (This is the upper part of the range 10^{-5} or greater previously applied to the term "PROBABLE".) Probable events may be expected to occur several times during the operational life of each rotorcraft, that is based on a probability on the order of between 10^{-3} to 10^{-5}.

(3) REMOTE. (The term "REMOTE" is not related to the structural use of the term.) (This is the lower part of the range 10^{-9} to 10^{-5} previously applied to the term "IMPROBABLE".) Remote events are not expected to occur during the total operational life of a random single rotorcraft of a particular type, but may occur during the total operational life of all rotorcraft of a particular type, that is based on a probability on the order of between 10^{-5} to 10^{-7}.

(4) EXTREMELY REMOTE. (The term "REMOTE" is not related to the structural use of the term.) (This is the upper part of the range 10^{-9} to 10^{-5} previously applied to the term "IMPROBABLE".) Extremely remote events are not expected to occur during the total operational life of a random single rotorcraft of a particular type, but may occur during the total operational life of all rotorcraft of a particular type, that is based on a probability on the order of between 10^{-7} to 10^{-9}.

(5) EXTREMELY IMPROBABLE. (Remains the same for both the three or the five classifications.) Extremely improbable events are so unlikely that they need not be considered to ever occur, unless engineering judgment would require their consideration. A probability on the order of 10^{-9} or less is assigned to this classification.

NOTE:

If a quantitative analysis is used to help show compliance with Regulations for equipment which is installed and required only for a specific operating condition for which the rotorcraft is thereby approved, credit may not be taken for the fact that the operating condition does not always exist. Except for this limitation, appropriate statistical randomness of environmental or operational conditions may be considered in the analysis. (However, the particular condition and probability of that condition should be agreed to with the FAA/AUTHORITY.)

The five probability terms defined in paragraph d(2)(ii)(B) above are intended to relate to an identified failure condition resulting from or contributed to by the improper operation or loss of a function or functions. These terms do not define the reliability of specific components or systems.

Generally, the guidance for Failure Analysis of paragraph c, is not required in its entirety for Category B, non IFR rated rotorcraft. The only failure/reliability requirement is that no single failure can result in a hazard to the rotorcraft. This can usually be accomplished by a systems safety assessment that may or may not, depending on complexity and configuration, require a numerical reliability analysis.

e. Documentation. All laboratory, ground and flight tests, and failure analyses, must be documented in sufficient detail to show compliance with § 29.1309 and included in the type design file. Section 21.31(a) provides the regulatory basis for requiring this documentation. If the applicant elects to use a numerical reliability/probability analysis it must also be documented in sufficient detail.

f. Computer Software. The latest standard for qualification of software is DO178B; however, the use of DO178A for a standard is not precluded at this time. Because of this dual standard situation, at this time, use of both standards will be addressed for qualification of software that is used for airborne systems and equipment certification.

(1) RTCA Document DO178A

(i) RTCA Document DO-178A, “Software Considerations in Airborne Systems and Equipment Certification,” dated March 22, 1985, is a recommended standard to be used for the approval of system software. This document defines three levels of software; i.e., levels 1, 2, and 3. The level of the software is related to the consequence of a system malfunction caused by an error in the software. The criticality categories are:

(A) Critical - Functions for which the occurrence of any failure condition or design error would prevent the continued safe flight and landing of the aircraft.

(B) Essential - Functions for which the occurrence of any failure condition or design error would reduce the capability of the aircraft or the ability of the crew to cope with adverse operating conditions.

(C) Nonessential - Functions for which failures or design errors could not significantly degrade aircraft capability or crew operational cue.

(ii) The different software levels may be related to the criticality categories. Level 1 software, the most error free software, is usually required for critical functions. However, Level 1 software may sometimes be reduced by system architecture techniques such as the use of redundant (dissimilar) software performing the same function. Level 2 software is required for essential functions. It should be noted that those systems, equipment, and installations, with functioning required by 14 CFR subchapter C, are by this definition, essential functions. The criticality of the function should be determined by the use of a fault/failure or hazard analysis. The

Society of Automotive Engineers Aeronautical Recommended Practice Document Nos. 926A and 1834, are the recommended references for performing these analyses.

CAVEAT: The user of DO-178A is cautioned by a caveat in Chapter 3 that for a certain class of systems, the techniques in DO-178A, Level 1 software are not by themselves sufficient consideration for reliance on system software to preclude a catastrophic event. Additional considerations are required with this class of system for software verification and validation (V&V) in addition to those required for DO-178A Level 1. This class of systems is one which has been called, “full flight regime critical.” An example of such a system is a fly-by-wire flight control. This system must perform its intended function through the full flight regime to provide for the continued safe flight and landing of the rotorcraft. For this system, software and system level validation beyond the scope of DO-178A are required. Also, DO-178A cautions the user against the assignment of probabilities of residual software errors. The conclusion of Special Committee No. 152 (the RTCA committee that wrote DO-178A) was that the present methods available for assigning “reliability” numbers to software do not yield credible results for certification purposes.

(2) RTCA Document DO-178B

(i) RTCA Document DO-178B, “Software Considerations in Airborne Systems and Equipment Certification,” dated December 1, 1992, is the latest standard and is recommended to be used for qualification and subsequent approval of system software. This document defines five levels of software; i.e., levels A, B, C, D, and E. The level of software is related to the criticality of the function that may be adversely affected by an error in the software. The criticality categories are as follows:

(A) Catastrophic - failure conditions that would prevent continued safe flight and landing.

(B) Hazardous/Severe-Major - failure conditions that would reduce the capability of the aircraft or the ability of the crew to cope with adverse operating conditions to the extent that there would be:

(1) A large reduction in safety margins or functional capabilities.

(2) Physical distress or higher workload such that the flight crew could not be relied on to perform their tasks accurately or completely.

(3) Adverse effects on occupants, including serious or potentially fatal injuries, to a small number of those occupants.

(C) Major - failure conditions that would reduce the capability of the aircraft or the ability of the crew to cope with adverse operating conditions to the extent that there would be, for example: a significant reduction in safety margins or functional

capabilities, a significant increase in crew workload or in conditions impairing crew efficiency, or discomfort to occupants, possibly including injuries.

(D) Minor - failure conditions that would not significantly reduce aircraft safety, and would involve crew actions that are well within their capabilities. Minor failure conditions may include, for example: a slight reduction in safety margins or functional capabilities, a slight increase in crew workload, such as, routine flight plan changes, or some inconvenience to occupants.

(E) No Effect - failure conditions that do not affect the operational capability of the aircraft or increase crew workload.

(ii) The software levels are usually related to the criticality categories. Level A qualified software is the most error-free software and is usually required for functions that could exhibit catastrophic failures. However, additional considerations may moderate this direct relationship and allow some lower level of software qualification for higher function criticality categories. Some of the moderating factors may be architecture of the system/software, redundancy of systems using dissimilar software, hardware/software monitors, and independent function contributions. It is recommended that these practices are carefully employed and prior FAA/AUTHORITY approval of the methodology should be obtained before the design is pursued. Typically, Level A is required for flight controls where the catastrophic criteria applies. Level B qualification is less than Level A and is employed in some flight controls and required flight instruments, where their malfunction would result in the hazardous/severe major critical category effect on the rotorcraft or its crew and occupants. Level C qualification is less than Level B and is employed in some required flight instruments commensurate with failure category “Major.” However, this lower level of qualification may be appropriate for either or both of the higher failure categories if the criteria can be met as discussed previously for level reduction. Level D qualification is less than Level C and is typically employed for required systems/equipment that do not exhibit the fault potential of the higher categories. Level E qualification is less than Level D and is employed in those systems/equipment that are not required by the regulations. Examples are entertainment systems, powered seats, etc.

(iii) Although a rough correlation exists between software levels and criticality levels that in turn relate to a probability in numbers, these numbers cannot be applied to software to determine reliability. The quality assurance of software is obtained by the processes delineated in DO178B and at this time, have no correlation with probability.

g. High Intensity Radiated Fields (HIRF).

(1) Explanation. A regulatory project is active to add requirements for the protection of aircraft electrical and electronic systems from the effects of the HIRF environment. This effort is the result of technological advances in airframe and

electronic systems design and a concurrent increase in the levels of radiated power in the aircraft environment. These changes have raised vulnerability to the electromagnetic environment of the electrical and electronic systems which perform critical and essential functions. In current type certification programs involving advanced electrical and electronic systems the FAA/AUTHORITY has adopted special conditions to provide an adequate level of safety.

(i) The special conditions are directed toward the operation and operational capability of the installed electrical and electronic systems that perform critical functions. The applicant may demonstrate that these systems are not adversely affected when the aircraft is exposed to the HIRF environment, or as an alternative a laboratory test may be conducted, as discussed in the “Discussion” associated with each special condition. The laboratory tests would be conducted at a peak electromagnetic strength of 100 or 200 volts per meter, as appropriate, in a frequency range of 10 kHz to 18 GHz.

(ii) A definition of the HIRF environment is included in FAA Notice 8110.71, dated 2 April 1998 [Subject: Guidance for the Certification of Aircraft operating in High Intensity Radiated Field (HIRF) Environments]. SAE chartered a HIRF committee, SAE-4R, to define the HIRF environment for VFR and IFR aircraft, to prepare a Users Manual, and to submit a proposed advisory circular to the FAA/AUTHORITY. This committee has currently completed its task, except for the Users Manual. The referenced FAA Notice has been updated several times to reflect the latest SAE-4R recommended electromagnetic fields.

(iii) If the laboratory test alternative is selected the 100 volts/meter level is considered appropriate for a function that is critical during IFR operations and the 200 volts/meter level is considered appropriate for a function that is critical during VFR operations. This is because the minimum en route altitude for IFR flight is 1,000 feet or 500 feet (FAA or ICAO), and rotorcraft operating VFR can and do operate regularly at lower altitudes. The attitude system is an example of a system performing a critical function during IFR operation. A full authority digital engine control (FADEC) system is an example of a critical function during VFR and IFR operation.

(iv) JAA has issued a HIRF Interim Policy Paper to be used as JAA special conditions. This Interim Policy Paper was drafted by the Aviation Authority members of EUROCAE WG 33. The JAA Interim Policy requires full aircraft testing for systems performing Level A control functions and laboratory testing for Level A display, Level B, and Level C systems. The Interim JAA HIRF environment is the January 1992 environment used in INT/POL/25/2, with exceptions in the 2-4GHz and 6-8GHz bands. JAA guidance material for acceptable means of compliance is AMJ.1317.

(2) Procedures. It is recommended that the applicant present a plan to the cognizant FAA Aircraft Certification Office (ACO) for approval, outlining how the compliance with the HIRF requirements will be attained. This plan should also propose a pass/fail criteria for the operation of critical systems in the HIRF environment.

(i) A preliminary hazard analysis should be performed by the applicant for approval by the cognizant FAA ACO to identify electrical and/or electronic systems that perform critical functions. The term “critical functions” means those whose failure would prevent the continued safe flight and landing of the rotorcraft.

(ii) The systems performing critical functions that are identified by the preliminary hazard analysis are candidates for the application of HIRF requirements. A system may perform both critical and non-critical functions; however, the HIRF requirements only apply to critical functions. If redundant systems are used, all systems should be subjected to test/analysis for the HIRF requirements.

(iii) The latest revision of RTCA document DO-160/EUROCAE ED-12D, Section 20, is an appropriate reference for laboratory test procedures. In addition, a separate advisory circular and users guide on the subject of HIRF is being drafted for the FAA/AUTHORITY by the SAE AE4R Subcommittee.

SUBPART F - EQUIPMENT

INSTRUMENTS: INSTALLATION

AC 29.1321. § 29.1321 (Amendment 29-21) ARRANGEMENT AND VISIBILITY.

a. Background. This section is the first in a series that concerns the installation of instruments. Specific requirements for individual instruments are addressed in other paragraphs. The instruments should be arranged in a manner such that the pilot may avail himself of the information displayed by the instruments without undue distraction. Additionally, for instrument flight, the rule requires that the attitude, altitude, airspeed, and compass indicators be grouped in the so-called standard "T."

b. Procedures.

(1) For rotorcraft certified for VFR operation, the flight, navigation, and powerplant instruments should be placed such that the pilot and copilot, if a required crewmember, can easily see and read these instruments when seated normally. Additionally, the instruments should be located so that the necessity for the pilot to turn his head is minimized. The instruments which are necessary for safe operation including the airspeed indicator, gyroscopic direction indicator, gyroscopic bank-and-pitch indicator, slip-skid indicator, altimeter, rate-of-climb indicator, rotor tachometers, and the indicator most representative of engine power should be installed immediately in front of the pilot.

(2) The other powerplant instruments should be grouped together and visible to any appropriate crewmember. On multiengine rotorcraft, there should be no confusion regarding which engine an individual gauge represents. This is usually accomplished by mounting the engine gauges vertically in the center of the instrument panel. Identical gauges are placed next to each other and positioned from left to right in the same position and sequence as the corresponding engine location in the airframe.

(3) An evaluation should determine that vibration of the instrument panel does not exceed the tolerances of the instruments. The instrument manufacturer will usually provide data that indicate the level of vibration for which the instrument has been qualified. The flight test evaluation of the rotorcraft should explore and determine that the vibration of the instrument panel does not affect the readability of the instruments. To meet these two criteria, it has been necessary in some installations to "shock mount" or otherwise isolate the instrument panel.

(4) The flight test evaluation should also determine that the flags or malfunction indicators of the instruments should be readily visible in all combinations of lighting for approved kinds of operations.

(5) For IFR-certified rotorcraft, there is an additional requirement that the airspeed, altimeter, attitude, and compass instrument be located in a standard “T” configuration in front of the pilot. This configuration is:

airspeed - attitude - altitude

compass

(AC 29 Appendix B further addresses IFR panel arrangement.)

(6) Geometric variation from a perfect “T” has been permitted. Each installation should be evaluated for suitability based on criteria such as panel size, ease of scan, and readability of the individual elements in the overall presentation. Advisory Circular 25-11, Transport Category Airplane Electronic Display Systems, provides additional guidance for “glass cockpit” installation.

AC 29.1322. § 29.1322 (Amendment 29-12) WARNING, CAUTION, AND ADVISORY LIGHTS.

a. Explanation.

(1) Cockpit devices are color coded to symbolically represent various functions and varying levels of importance for flight crew operation. From early times, an attempt has been made to take full advantage of associations developed early in life as a result of continuous exposure to our daily environment.

(2) Military design specifications were the first to reference color-coding in cockpit design requirements. In the mid-1940s, the CAA initiated the first color-coding requirements for civil cockpit design. Color-coding standards for cockpit visual signals soon followed. MIL-STD-411, May 31, 1957, identified three separate categories of light signals:

(i) Warning Light - indicates the existence of a hazardous condition which may require immediate corrective action.

(ii) Caution Light - serves to alert the operator to an impending dangerous condition requiring attention but not essential equipment, or attracts attention for routine purposes.

(iii) Advisory Light - indicates safe or normal configuration, condition of performance, or operation of essential equipment, or attracts attention for routine purposes.

(3) Examples of warning and caution signals were included in later versions of the military standard, and a few of those are shown below:

Warning Signals	Caution Signals
Cabin Pressure Failure	Trim Failure
Fire	Fuel Low
Fuel System Failure	Generator Inoperative
Landing Gear Unsafe	Defrosting Failure

(4) Specific color designation for civil advisory lights was first addressed in Amendment 3 to the Rotorcraft Certification Rules (Parts 27 and 29) on January 19, 1968, with adoption of new §§ 27.1322 and 29.1322.

(5) In subsequent revision (Amendment 29-12), green lights were redesignated and additional colors introduced for flexibility in the requirement.

(6) Green signifies a safe operating condition and more specifically has come to signify landing gear extended and locked. Extensive use of green annunciators throughout the cockpit should generally be avoided due to possible confusion with the special use of green for landing gear. If green annunciators are physically and functionally removed from the landing gear operation, they may be found acceptable for a variety of “safe operating” applications. One such application is “all green for approach,” used in autopilot, flight director, and other navigation system displays.

(7) Other colors may be utilized as advisory lights in accordance with § 29.1322(d). Red and amber must not be used as advisory lights due to the possibility of introducing confusion into the cockpit. Obviously, yellow and pink annunciators should be avoided due to their similarity to amber and red. White and blue have been successfully utilized as advisory segments in past civil designs.

(8) The primary test for designation of color is:

(i) Red - Is immediate action required:

(ii) Amber - Is pilot action (other than immediate) required?

(iii) Green - Is safe operation indicated, and is the indication sufficiently distinct to prevent confusion with the landing gear down indication?

(iv) Other advisory lights - Is the meaning clear and distinct enough to prevent confusion with other annunciators? Do the colors which are utilized differ sufficiently from the colors specified in paragraphs (b)(1), (2), and (3) above?

(9) Annunciator lights should be visible during bright daylight conditions. This should include visibility in direct sunlight unless lights are located in such a manner that direct sunlight cannot impinge on them.

(10) If dimming capability is provided, all annunciators, including master warning and caution, may be dimmable so long as the annunciation is clearly discernible for night operation at the lower lighting level. Undimmed annunciations have been found unacceptable for night operation due to disruption of cockpit vision at the high intensity. The dimming circuit should automatically revert to the high intensity setting when power is removed. Automatic dimming/brightening through the use of a photo cell is also acceptable, as are circuits which enable a dimming switch through a position light or other cockpit lighting controls.

(11) The use of flashing lights should be minimized. If a flashing feature is used, it should be controllable through pilot action so that flashing annunciation does not persist indefinitely. The indicator should be so designed that if it is energized and the flasher device fails, the light will illuminate and burn steadily.

(12) The activation of caution and warning lights should readily attract the attention of the appropriate crewmember while performing duties under both normal and high workload conditions.

b. Procedures.

(1) Red shall be reserved for annunciation of emergency conditions requiring immediate corrective action. Typical examples include fire, transmission oil pressure, engine failure, and battery overheat. The use of red for annunciators which do not require immediate action must be avoided. Use of red when it is not needed tends to lessen the impact of a red annunciator and the needed pilot association for immediate action. In evaluating cockpit annunciators for acceptability, the FAA/AUTHORITY should assure all annunciators which require immediate action are red and that only those requiring such action are red. If a master warning light is provided, it should be red, and should be powered by the same signal that powers any of the individual red warning signals. An aural warning may accompany visual warning signals to enhance pilot response. Care should be taken that any aural signal is sufficiently distinct from other aural warnings, such as low rotor RPM, to prevent confusion and to assure proper crew response. A means to deactivate and reset the master warning (visual and aural) is required. Resetting the master warning must not deactivate any individual warning signal.

(2) Amber shall be reserved for indicating malfunction or failure conditions which do not require immediate crew action to assure safe flight. Typical examples include door unlatched, inverter failure, generator failure, fuel filter clogged, and parking brake engaged. Amber should generally be utilized for malfunction and failure conditions which do not require immediate action. The key word here is “require.” Obviously, a pilot should perform corrective action for malfunction or failure conditions in a timely manner as soon as other cockpit priorities allow. The time increment associated with “immediate action” may vary with the system involved, the flight regime, and the aircraft; however, 15 seconds is a representative value in evaluating this term. This by no means indicates that any red annunciator can be ignored for 15 seconds.

For red annunciators, some type of immediate pilot response is expected. If immediate pilot action is not required, the FAA/AUTHORITY should recommend the use of an amber designation. If a master caution light is provided in addition to a master warning light, the master caution annunciator should be amber, and should be powered by the same signal that powers any of the individual amber caution signals. Reset considerations for the master caution are the same as those detailed above for the master warning.

c. Annunciator Panel Design

(1) Explanation.

(i) The annunciator panel design should be reviewed for the presence of failure modes that can cause illumination of multiple panel segments.

(ii) Many test circuits that are diode isolated are vulnerable to this condition. A typical sequence begins with the shorting of a test circuit diode. This failure is undetectable and goes unnoticed until an actual failure condition occurs which causes the associated panel segment to illuminate. At this time all panel segments connected to the test circuit will illuminate.

(iii) This configuration becomes a special problem when one or more of the panel segments are red. A red light calls for immediate action by the crew, and the crew does not have adequate information for immediate action when many false panel segments are illuminated.

(iv) If the design review indicates a problem, a redesign of the panel to eliminate the condition is considered to be the best solution and is highly encouraged.

(2) Procedures.

(i) An alternative to panel redesign might be the following:

(A) Review the annunciator panel design and note which segments are red.

(B) Determine if cross reference information is available in the cockpit to allow elimination from consideration of any the red segments. (Example: Red low fuel pressure light and low fuel pressure gauge. Normal operation of the gauge would be a reason to assume the light did not cause the problem.)

(C) Where a cross reference is available, further design review of that function is not necessary; however, it may be appropriate to include procedural information in the emergency procedures section of the rotorcraft flight manual.

(D) If cross references are not available for red segments, additional isolation should be incorporated into the annunciator design for those functions.

(ii) If cross referencing is not practical the following approach is encouraged.

(A) Review the annunciator panel design and note which segments are red.

(B) Determine if isolation diodes are checked during the application of battery or external power before starting the engines. (Example: Red low oil pressure light. If isolation diode is shorted, all panel segments will light as soon as battery or external power is applied.)

(C) When the isolation diode can be checked before starting engines, further design review is not necessary.

(D) If diodes are not automatically checked before starting, then additional isolation, should be considered.

(3) Annunciator Panel Arrangement. The annunciator panels should be arranged in a logical manner to reduce the crew's time required to locate faults and to increase their efficiency in following Aircraft Flight Manual procedures. For example, engine annunciators on multiengine rotorcraft should be physically located on the panel to coincide with engine location (left or right) so that properly operating engines are not inadvertently shut down due to crew confusion over which engine has malfunctioned.

AC 29.1323. § 29.1323 (Amendment 29-3) AIRSPEED INDICATING SYSTEM.

a. Explanation.

(1) The accuracy of all flight test data concerned with the velocity of the rotorcraft is dependent on the calibration of the airspeed indicating system. For this reason, the airspeed system position error should be determined very early in the program.

(2) Since air density varies with altitude, the speed reading will only be correct under standard sea level conditions. However, in an actual installation, the indicator reading, even under standard sea level conditions, may differ from the calibrated airspeed because the static system does not sense true static pressure. This error in detection of static pressure is called position error. It is caused by the pressure field built up around the rotorcraft in flight. This pressure field will vary in intensity with dynamic pressure making the position error a function of calibrated airspeed. Since airspeed information is presented to the crew in terms of indicated airspeed, it is necessary to determine the position error for the rotorcraft to be flown safely.

b. Procedures.

(1) There are different methods to determine position error such as trailing bomb, airspeed course, boom system, and so forth. Each method has its own advantages and disadvantages, but will yield satisfactory results if done correctly. The airspeed system should be calibrated throughout the airspeed range of the rotorcraft and under the various flight conditions of cruise, climb, and autorotation standard. In addition, the effects of gross weight and center of gravity should be investigated.

(2) It may also be necessary to recalibrate the system with a change in external configuration if such a change may affect the airflow near the pitot or static sources.

(3) Additional information regarding position error is included in AC 29 Appendix B b(10) and should be considered if pursuing an IFR approval.

(4) Static system installation information is included in paragraph AC 29.1325. Technical Standard Order (TSO) C16, Airspeed Tubes (Heated), gives minimum performance standards for pitot tubes, and pitot tubes qualified to this TSO normally allow for a satisfactory aircraft installation.

(5) The calibration requirements of the standard seem to be self-explanatory and are not discussed further in this paragraph.

AC 29.1323A. § 29.1323 (Amendment 29–24) AIRSPEED INDICATING SYSTEM.

a. Explanation. Amendment 29-24 to the regulations provides the requirements for Category A and Category B and defines the maximum allowable error for both.

b. Procedures. All of the policy material pertaining to this section remains in effect. In addition, calibration should be determined in level flight speeds of 20 knots and greater, and over an appropriate range of speeds for flight conditions of climb and autorotation; and takeoff. The takeoff calibration should be repeatable with respect to field lengths defined in the flight manual and avoidance of height-speed limiting envelope defined in § 29.79. Calibration errors, excluding instrument errors, may not exceed the following:

(1) Category A - Three percent or 5 knots, whichever is greater, in level flight at speeds above 80 percent of takeoff safety speed; and 10 knots in climb at speeds from 10 knots below takeoff safety speed to 10 knots above V_Y.

(2) Category B - Three percent or 5 knots, whichever is greater, in level flight at speeds above 80 percent of the climb-out speed attained at 50 feet when complying with § 29.63.

AC 29.1325. § 29.1325 (Amendment 29-24) STATIC PRESSURE SYSTEMS.

a. Explanation.

(1) This section, in conjunction with § 29.1323, provides minimum performance standards for static pressure systems. The standard provides some relief when considering the icing environmental condition in that it allows the use of an alternate static port to account for the icing condition.

(2) The standard for the consideration of environmental conditions is § 29.1309(a).

(3) The standard for consideration of malfunction conditions is § 29.1309(b).

(4) For rotorcraft that will be approved for IFR operation, the provisions of Appendix B VIII(b)(5) of Part 29 as discussed in paragraph AC 29 Appendix B, should also be considered.

b. Procedures. The installation of the static system should consider the following:

(1) Static lines should be initially routed upward immediately behind the static pressure port. This procedure will minimize the entry of moisture into the system when operating in rain or washing the rotorcraft.

(2) Drain(s) should be located at low points in the system. Line routing and clamping should allow for all moisture that does enter the system to be routed to the drain(s).

(3) If independent systems are provided, the placement of each system component should allow for maximum practicable separation of each system. As much as possible, one system should be on one side of the rotorcraft and the second system on the opposite side.

(4) Most static pressure ports that are provided for IFR operation are heated. Before any tests are conducted, a program to qualify the heater on the port should normally be agreed upon through discussions between the FAA/AUTHORITY and the applicant. It is suggested that the requirements of TSO C16, Airspeed Tubes (Heated), be used as a guide for these discussions. If the ports are not to be heated, a comprehensive analysis should be prepared, and limited testing should be conducted to verify the analysis.

(5) Other static system considerations are included in paragraphs AC 29.1323 and AC 29 Appendix B.

AC 29.1327. § 29.1327 MAGNETIC DIRECTION INDICATOR.

a. Background. This section contains specific requirements regarding installation and functioning of a magnetic direction indicator. The magnetic direction indicator (commonly referred to as a compass) described by this paragraph is the unit required by § 29.1303(c) or the unit or system required for IFR operation by Appendix B VIII(a) to Part 29. Both of these indicators provide the pilot with an aircraft heading which is referenced to the earth's magnetic field. The unit required by § 29.1303(c) is the indicator commonly referred to as a "whiskey compass." This unit was given this designation because early units were constructed using alcohol as the medium in which the compass ball floats. This unit is generally approved as meeting the requirements of TSO-C7c. The indicator required by Appendix B to Part 29 is usually a system of units which meets the requirements of TSO-C6c.

b. Procedures. In showing compliance to § 29.1327(a), generally the magnetic indicator and its respective components will be tested to an appropriate standard such as RTCA DO 160B for use in a rotorcraft. If the unit functioned properly as described in the TSO during this testing, then no additional evaluation is generally required concerning vibration immunity. To determine the immunity of the indicator (system) from magnetic effects and its installed accuracy, a ground and flight test should be performed. This test should turn the rotorcraft a full 360° heading change in 45° increments. The indicator should not have an error in excess of 10° on any of the 45° increments. When performing these tests, the electrical equipment and systems should be functioning normally, and the effect of windshield heating (if installed) should be investigated. The results of the investigation may be used to construct the calibration placard which is required by § 29.1547. It should be noted that a calibration placard has not been traditionally required for slaved compass systems. Also, it should be emphasized that other aspects of the functioning and installation of these indicators should comply with the other general requirements (i.e., §§ 29.1301, 29.1309, 29.1555, etc.).

AC 29.1329. § 29.1329 (Amendment 29-24) AUTOMATIC PILOT SYSTEMS.

a. Explanation. The automatic flight control systems used on most modern rotorcraft often perform two different and distinct functions when viewed from a regulatory compliance aspect. These two functions are augmentation of the stability of the rotorcraft and a pilot aid in maintaining attitude, altitude, and airspeed, or in radio navigation tasks. The first function of stability is not covered in § 29.1329 but is included under § 29.672. The second function as a pilot aid is the automatic pilot function covered by this section. The following procedure discusses only those parts or systems which are installed as a pilot aid. Paragraph AC 29 MG 3 discusses the use of automatic systems for Category II approaches, and paragraph AC 29 Appendix B discusses the evaluation of stability augmentation systems.

b. Procedures.

(1) General.

(i) The automatic pilot system should be evaluated to demonstrate that it can perform its intended function of flying the rotorcraft and that it complies with the installation, operation, and malfunction requirements of § 29.1329. In demonstrating malfunctions of the autopilot system, generally servo actuator hardovers are the most critical malfunction. If this is the case and the autopilot system utilizes the same servos and servo amplifiers as the stability augmentation system (SAS) and the autopilot function cannot produce a more severe hardover than the SAS, then no additional consideration is required for this malfunction. An evaluation using the guidance in paragraph AC Appendix B would be sufficient.

(ii) There have been autopilots approved that require the use of a monitor since they cannot meet the hardover malfunction requirements. These approvals have involved a finding of equivalent safety that is beyond the scope of this AC. Such findings of equivalent safety are made on a case-by-case basis. If an applicant is considering such a design, the applicant and the approving office should contact the Rotorcraft Standards Staff specialists for guidance.

(iii) The rule specifies that unless there is automatic synchronization, there should be some method to indicate the alignment of the actuating device to the pilot. The intent of this requirement is to provide a means such that the pilot does not inadvertently engage the system into a hardover condition. One method of achieving this has been the use of servo force meters. These meters monitor the current into the servo motor and indicate to the pilot if a signal is being sent to the servo prior to system engagement.

(iv) Various autopilot systems have used a preflight test to ensure adequate reliability. The question which often arises is: Should the preflight test function be interlocked so the autopilot cannot be engaged if the preflight test has not been accomplished? The guidance used in the past to answer this question is: If the preflight test is simple and rapid enough that the pilot may reasonably be expected to perform such a test, then it is not required to be interlocked. If, however, the preflight test is very complicated and lengthy and a pilot who was pressed by a schedule might skip such a test, then this preflight test should be interlocked.

(v) Most of the autopilots that have been approved utilize series actuators or servos such as those required for a SAS. However, this does not preclude the approval of an autopilot that uses outer loop parallel actuation. This type of autopilot may be particularly helpful in a VFR aircraft.

(2) Cockpit controls. Evaluation of the cockpit controls should include the following items:

(i) Location of the automatic pilot system controls are such that their operation is properly labeled and is readily accessible to the pilot(s).

(ii) Annunciator colors conform to the colors specified in § 29.1322 (reference paragraph AC 29.1322).

(iii) A determination is made that the controls, control labels, and placards are readable and discernible under all expected cockpit lighting conditions.

(iv) Motion and effect of the autopilot cockpit controls should conform with the requirements of § 29.779.

(v) Any disconnect of the autopilot should be annunciated.

c. Malfunction Evaluations. To preclude hazardous conditions that may result from any failure or malfunctioning of the autopilot the following failures should be evaluated. This evaluation should also account for any hazards that also might be caused by inadvertent pilot action. The guidance in paragraph AC 29 Appendix B should be used to determine the appropriate reaction times of the human pilot to an autopilot malfunction.

(1) Climb, cruise, and descent flight regimes. The more critical of the following should be induced into the automatic pilot system.

(i) A signal about any axis equivalent to the cumulative effect of any single failure, including autotrim (if installed).

(ii) The combined signals about all affected axes, if multiple axes failures can result from the malfunction of any single component.

(2) Limit Loads. The simulated failure and the subsequent corrective action should not create loads in excess of structural limits or result in dangerous dynamic conditions or deviations from the flight path. Additional guidance regarding the method of determining pilot recognition times and reasonable flight path deviation due to these simulated failures is contained in paragraph AC 29 Appendix B b(6). Resultant flight loads outside the envelope of zero to 2g will be acceptable provided adequate analysis and flight test measurements are conducted to establish that no resultant aircraft load is beyond limit loads for the structure, including a critical assessment and consideration of the effects of structural loading parameter variations (i.e., center of gravity, load distribution, control system variations, maneuvering gradients, etc.). Analysis alone may be used to establish that limit loads are not exceeded where the aircraft loads are in the linear range of loading (i.e., aerodynamic coefficients for the flight condition are adequately established and no significant nonlinear air loadings exist). If significant nonlinear effects could exist, flight load survey measurements may be necessary to substantiate that the limit loads are not exceeded. The power for climb should be the most critical of: (1) that used in the performance climb demonstrations; (2) that used in the longitudinal stability tests; or (3) that actually used for operational climb speeds. The altitude loss should be measured.

(3) Maneuvering Flight. Malfunctions should also be induced into the automatic pilot system similar to paragraph c(1). When corrective action is taken, the resultant loads and speeds should not exceed the values contained in paragraph c(2). Maneuvering flight tests should include turns with the malfunction induced when maximum bank angles for normal operation of the system have been established and in the critical aircraft configuration and/or stages of flight likely to be encountered when using the automatic pilot. The altitude loss should be measured.

(4) Oscillatory Tests.

(i) An investigation should be made to determine the effects of an oscillatory signal of sufficient amplitude to saturate the servo amplifier of each device that can move a control. The investigation should cover the range of frequencies that can be induced by a malfunction of the automatic pilot system and systems functionally connected to it, including an open circuit in a feedback loop.

(ii) The results of this investigation should show that the peak loads imposed on the parts of the aircraft by the application of the oscillatory signal are within the limit loads for these parts.

(iii) The investigation may be accomplished largely through analysis with sufficient flight data to verify the analytical studies or largely through flight tests with analytical studies extending the flight data to the conditions which impose the highest percentage of limit load to the parts.

(iv) When flight tests are conducted in which the signal frequency is continuously swept through a range, the rate of frequency change should be slow enough to permit determining the amplitude of response of any part under steady frequency oscillation at any critical frequency within the test range.

(5) Recovery of Flight Control. To aid in recovery of the rotorcraft, after a malfunction occurs, one pilot should be able to physically overpower the autopilot and then disengage it with ease, and it should remain disengaged until further pilot action to reengage. The control to disconnect the autopilot should be easily available to the pilot who is now resisting the malfunctioning force of the autopilot. It is recommended that the disconnect button be placed on the cyclic control. It should be red and conspicuously marked “Autopilot Disconnect.” The pilot should be able to return the rotorcraft to its normal flight attitude under full manual control without exceeding the loads or speed limits defined in paragraph c(2) and without engaging in any dangerous maneuvers during recovery. The maximum servo authority used for these tests should not exceed those values shown to be within the structural limits for which the rotorcraft was designed. The maximum altitude loss experienced during these tests should be measured.

(6) External Interfaces. The autopilot system should have appropriate interlocks to its engagement to ensure it does not operate improperly as a result of information furnished by an external device or system. An example of this is the navigation receivers and the compass system. If for a particular mode of operation the autopilot uses signals from these systems, the autopilot should be interlocked from operating in those modes if invalid information is being received from that system.

d. Automatic Pilot Instrument Approach Approval.

(1) Throughout an approach, no signal or combination of signals simulating the cumulative effect of any single failure or malfunction in the automatic pilot system, except vertical gyro mechanical failures, should provide hazardous deviations from flight path or any degree of loss of control.

(2) The aircraft should be flown down the instrument landing system (ILS) in the configuration and at the approach speed specified by the applicant for approach. Simulated autopilot malfunctions should be induced at critical points along the ILS, taking into consideration all possible variations in autopilot sensitivity and authority. The malfunctions should be induced in each axis. While the pilot may know the purpose of the flight, the pilot should not be informed when a malfunction is about to be or has been applied except through aircraft action, control movement, or other acceptable warning devices.

(3) An engine failure during an automatic ILS approach should not cause a lateral deviation of the aircraft from the flight path at a rate greater than 3° per second or produce hazardous attitudes.

(4) If approval is sought for ILS approaches initiated with one engine inoperative, the automatic pilot should be capable of conducting the approach.

(5) Deviations from the ILS flight profile should be evaluated as follows:

(i) The rotorcraft should be instrumented so the following information is recorded—

(A) The path of the rotorcraft with respect to the normal glide path;

(B) The point along the glide path when the simulated malfunction is induced;

(C) The point where the pilot indicates recognition of the malfunction; and

(D) The point along the path of the rotorcraft where recovery action is initiated.

(ii) Data obtained from the point of the indicated malfunction to the point where the rotorcraft has either again intersected the glide slope or is in level flight will define the deviation profile. When changes to the aircraft autopilot configuration are made during the approach and these changes alter the deviation profile, additional data should be obtained to define each of the applicable deviation profiles. An example of a deviation profile is shown in figure AC 29.1329-1.

(iii) Recoveries from malfunctions should simulate under-the-hood instrument conditions with an appropriate time delay between pilot recognition of the fault and initiation of the recovery at all altitudes down to 80 percent of the minimum decision altitude for which the applicant requests approval.

(iv) Recoveries from malfunctions at altitudes between 80 percent of the minimum decision altitude for which the applicant requests approval and the minimum altitude for which the applicant requests approval to operate the autopilot may be visual with no time delay between pilot recognition of fault and initiation of recovery.

(v) The minimum altitude at which the autopilot may be used should be determined as the altitude that results in the critical deviation profile becoming tangent with a minimum operational tolerance line. An example of this may be found in figure AC 29.1329-2. The 29:1 slope of the minimum operational tolerance line provides a 1 percent gradient factor of safety over the 50:1 obstacle clearance line. An additional factor of safety is provided by measuring the 29:1 slope from the horizontal at a point 15 feet above the runway threshold. It is recognized that this minimum altitude will vary with glide slope angle. Information regarding these variations should be obtained and presented.

(vi) A malfunction of the autopilot during a coupled ILS approach should not place the aircraft in an attitude that would preclude conducting a satisfactory go-around or landing.

e. Servo Authority. The automatic pilot system should be installed and adjusted so the system tolerances established during certification tests can be maintained in normal operation. This may be ensured by conducting flight tests at the extremes of the tolerances. Those tests conducted to determine that the automatic pilot system will adequately control the aircraft should establish the lower limit. Those tests to determine that the automatic pilot will not impose dangerous loads or deviation from the flight path should be conducted at the upper limit. Appropriate aircraft loadings to produce the critical results should be used.

f. Rotorcraft Flight Manual Information. The following information should be placed in the rotorcraft flight manual:

(1) In the Operating Limitations Section. Airspeed and other applicable operating limitations for use of the autopilot.

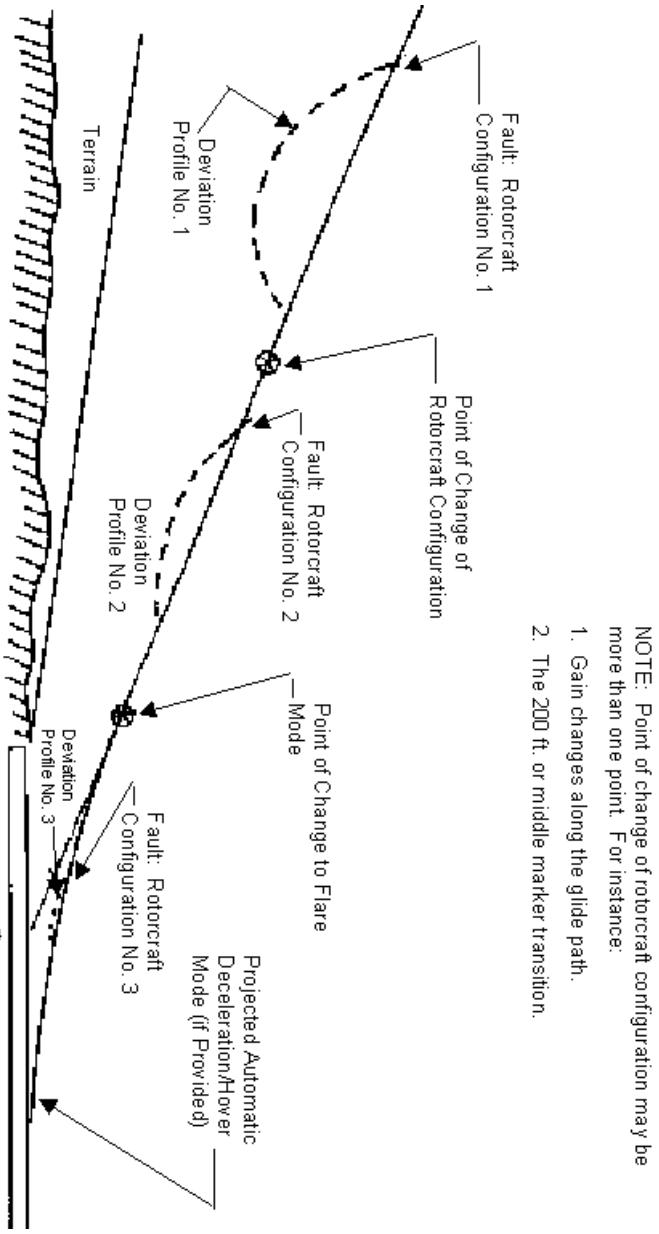

Figure A.C 29.1329-1 Deviation Profile

(2) In the Operating Procedures Section. The normal operation information.

(3) In the Emergency Operation Procedures Section.

(i) A statement of the downward flight path deviation in the cruise, climb, and descent configurations and the maneuvering flight configuration in accordance with paragraphs d(5)(iii) and d(5)(iv) of this paragraph, if this deviation exceeds 100 feet.

(ii) True profiles of deviations below the glide slope or projected flare path for the critical conditions tested in accordance with paragraphs d(5)(iv) (see figure AC 29.1329-1) and the deviation profile indicating the lowest altitude at which the autopilot can be used, as referenced in paragraph d(5)(v), if applicable, and if this deviation exceeds 100 feet or excessive deviation for an ILS approach.

g. There should be a means of sequencing actions or interlocking engagement with sensor inputs to prevent autopilot initiated maneuvers that could result in hazardous operations due to:

(1) Engagement of the autopilot;

(2) Malfunctions of autopilot input or feedback signals that could result in unbounded output commands.

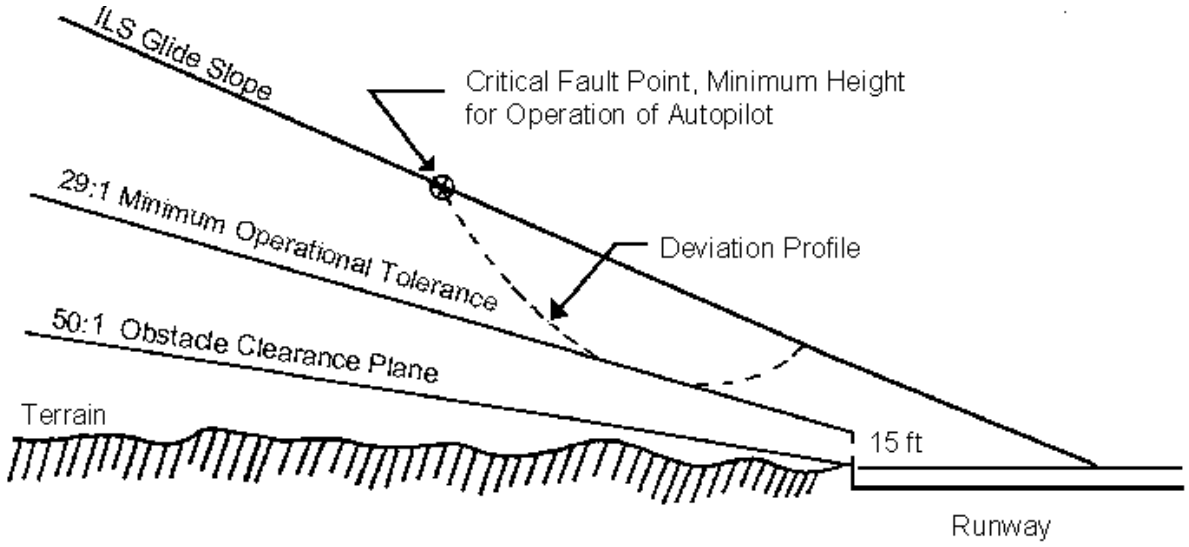

FIGURE AC 29.1329-2 OPERATIONAL LIMITATION

AC 29.1331. § 29.1331 (Amendment 29-24) INSTRUMENTS USING A POWER SUPPLY.

a. Explanation. The rule concerns each flight instrument using a power supply that is installed in a Category A rotorcraft. A reference to paragraph AC 29.1303 will give a listing of the flight instruments that are specifically required for certification. The discussion included in this paragraph is directed toward electrical instruments since these are the type normally installed in Category A rotorcraft. It should be noted, however, that the rule is not restricted to electrical instruments. Further, the discussion provided here can be used to evaluate non-electrical applications.

b. Procedures.

(1) This requirement must be considered when designing the electrical distribution system for Category A rotorcraft. It states that each required flight instrument must have two independent sources of power and a means of selecting either source. The flight instruments required for certification are listed in paragraph AC 29.1303, and independent power sources are discussed in paragraph AC 29.1355b(4).

(2) Some older flight instruments may not have integral visual means to indicate that adequate power is being supplied to the instrument as required by the rule. For these instruments, external annunciation has been accepted that monitors the presence of adequate voltage at the power pin on the electrical disconnect that mates with the electrical connector on the back side of the instrument. The annunciator light should be located in close proximity to the indicator and placarded to identify its function. Note that the rule requires the voltage monitored to be within the approved limits for the instrument to be adequate. Since relay coils normally operate well outside the approved instrument voltage limits, the use of a relay contact that closes when the monitored voltage drops low enough to pull in or release a relay coil does not normally result in a satisfactory design to meet the regulatory requirement. Annunciator lights provided for this application are normally red.

(3) The power supply system requirements of this rule should be coordinated with the requirements of § 29.1355 (see paragraph AC 29.1355). Both rules concern equipment or systems that require two independent sources of electrical power. Examples of faults in the distribution system to be considered include open feeders, shorted feeders, shorted busses, etc.

(4) Amendment 29-24 revised the regulation to further clarify the power adequacy indication requirement. The clarification provided was intended to make it easier to understand the meaning of adequate power in the event it was necessary to provide separate annunciation. The application of the rule in each form (before and after Amendment 29-24) should be the same.

AC 29.1333. § 29.1333 (Amendment 29-24) INSTRUMENT SYSTEMS.

a. Explanation. Prior to Amendment 29-24, this requirement was titled "Duplicate Instrument Systems," and its provisions were intended to be applied when duplicate flight instruments were required by any operating rule. Due to the increased complexity of instrumentation that is available and being used, it was considered appropriate to revise the provisions of this requirement to more appropriately consider the extreme range of operation environments to which rotorcraft are now routinely exposed. It is the intent of this rule to prevent degrading of the first pilot's instrument system, or the only pilot's instrument system in a single-pilot-approved rotorcraft, by not permitting peripheral systems to be connected to it. In addition, equipment must not be connected to operating systems for the second pilot's required instruments unless it is extremely improbable that failure of such additional equipment would affect that operating system. Similar provisions are also included in Appendix B to Part 29, Airworthiness Criteria for Helicopter Instrument Flight.

b. Procedures.

(1) The provisions of the current rule are essentially self-explanatory.

(2) If the certification basis of the rotorcraft is prior to Amendment 29-24, the provisions are more precise; however, they only apply in the instance where duplicate instruments are required by the operating rules.

(3) If an IFR approval is part of the certification effort, then Part 29, Appendix B, applies, and the provisions of paragraph VIII(b)(5) are essentially the same as the current rule. If the certification basis of the rotorcraft is prior to Amendment 29-24, and an IFR approval is being added, the instrument systems should be carefully reviewed since their design may not have considered the provisions of the IFR rule.

AC 29.1335. § 29.1335 (Amendment 29-14) FLIGHT DIRECTOR SYSTEMS.

a. Explanation. This section prescribes the accepted display criteria for a rotorcraft three-cue flight director providing command guidance for pitch, roll, and power. Three-cue flight directors for rotorcraft use the usual pitch and roll command cues with the third cue displayed on the left side of the attitude director indicator (ADI). These instruments can be used in either the two-axes or three-axes modes. In either mode, the lateral command cue controls the roll attitude, and the vertical command cue controls the pitch attitude. The rotorcraft attitude, controlled by the cyclic control, is changed to satisfy the flight director commands. The third cue, when displayed, commands collective pitch position and is used when an airspeed or pitch attitude mode and a vertical mode (altitude hold, glide slope, etc.) are selected.

(1) The general convention for flight director design is that each command bar is a "fly to" command. The motion of the flight director indicator is such to command a

corresponding sense of control system motion. This is true of flight director pitch and roll commands and should hold true for additional commands such as collective pitch.

(2) Some consideration should be given to the collective, or third cue, display. For example, if the collective symbol is selected as the fixed index, the command cue and collective pitch control should move in opposite directions when collective pitch changes are made. This configuration would constitute a conventional “fly to” indicator. If the collective symbol is selected for the movable index, the direction of motion of the collective symbol will coincide with the direction of collective pitch changes. In this case the moving collective symbol does not comply with the “fly to” convention; however, this configuration has been approved by the FAA/AUTHORITY with special symbology, special background effects, and special color coding, and has performed satisfactorily in service.

b. Procedures. The recommended display for a three-cue flight director incorporates the standard pitch and roll command symbols, either pitch and roll bars or the “V” bar display. The third cue, or collective symbol, should be located on the left side of the ADI. The shape of the moving cue and the background display should be unique to avoid being confused with a glide slope display or angle of attack display. One display uses a third cue, shaped like a small handle, to aid in identifying it as the collective pitch symbol.

(1) The color of the pitch and roll command indicators, the aircraft symbol, the background marking of the third cue, and third cue itself, should be consistent. The optimum color scheme uses the same color for the aircraft symbol and the collective symbol. This is usually fire orange. The command cues including the collective cue also should use the same color, usually yellow. The rationale for the different colors is that the aircraft symbol and the collective symbol (the same color) are moved toward their respective command cues. If the pitch command cue is above the center, the aircraft symbol is raised (nose pulled up) and, if the collective command cue is above the collective symbol, the collective pitch is raised, moving the collective symbol towards the command cue.

(2) If the attitude director indicator (ADI) provides a monochromatic display, the collective pitch cue and its background markings must be distinctive to reduce the chance of being confused with the glide slope indicator. This can be accomplished through the use of different shaped cues and background marks. A round cue with a chevron-shaped background marking has been satisfactory.

AC 29.1337. § 29.1337 (Amendment 29-13) POWERPLANT INSTRUMENTS - (Paragraph (b) - FUEL GAUGE CALIBRATION).

a. Explanation. Section 29.1337(b) requires, in part, a means to indicate to the flightcrew the quantity of useable fuel in each tank in flight. Since the flight attitude of a rotorcraft may vary significantly with CG (center of gravity) and airspeed, a standard attitude for calibration of the fuel quantity gauge is needed. In addition, guidelines for

gauge accuracy and comments regarding other fuel quantity gauging aspects are offered.

b. Procedures.

(1) Determine the rotorcraft pitch attitudes for most forward and most aft CG at a median gross weight and at an airspeed of 0.9 V_{NE} or 0.9 V_H, whichever is less. The mean attitude of the extremes defined above, further adjusted for lateral CG effects, if necessary, define the rotorcraft attitude for fuel gauge calibration.

(2) After establishing the calibration attitude, the requirements of § 29.1337(b) can be accomplished. The aircraft should be placed in the calibration attitude. Add fuel to the filler neck spillover level. Defuel the aircraft in increments corresponding to fuel gauge increment markings or at least 10 increments until gauge zero is obtained. Precautions should be taken during this step to be sure that the fuel transmitter is sensing fuel level and not simply reflecting a physical “STOP” or end point in the system range. The fuel remaining in the tank below the “ZERO” mark must not be less than that amount determined by flight testing under § 29.959. (Otherwise, the zero point must be adjusted upward.) The gauging system accuracy is acceptable when it meets a tolerance of ±2 percent of the total useable fuel plus ±4 percent of the remaining usable fuel at any gauge reading, provided that the gauge indicates zero fuel with unusable fuel in accordance with § 29.959 in the tank. (For a 100-gallon tank this formula would allow a ±6-gallon error at the full level, ±4-gallon error at 50-gallon level, converging to a ±2-gallon error at low fuel with the further provision that the zero mark accurately reflects unusable fuel.)

(3) Certain other aspects of a fuel gauging system need attention in order to minimize fuel exhaustion incidents:

(i) Gauge reading with the aircraft at ground attitude is frequently used by the crew in calculating range, weight and balance, and actual gross weight. Significant gauge errors in either direction during this reading can introduce hazards to the operation of the aircraft. If a calibration at this attitude indicates an unconservative error in excess of 6 percent of the gauge reading, corrective information should be applied adjacent to the fuel quantity gauge or be made available to the crew in other handbook data.

(ii) Flight during hover with maximum rearward wind may introduce significantly different fuel gauge readings. A check should be made to assure that the gauge is either accurate or at least does not read high (unconservative) in this attitude.

(4) Fuel gauging system transmitters which are strictly volumetric measuring devices (float-actuated variable rheostats) introduce a gauge readout error of about 5 percent if calibrated with a fuel temperature of 0° C and subjected to -55° C fuel or +55° C fuel. This error may be minimized by calibrating the gauge with fuel temperature in the middle of the useful range; i.e., 15° C.

(5) Capacitance transmitters have become the standard for most modern fuel systems. These transmitters ordinarily need no temperature compensation since the fuel volume and the fuel dielectric constant vary inversely as temperature changes. The basic capacitance transmitter does not compensate for the different dielectric values to be expected with different type fuels. An add-on capacitance located so as to be submerged in fuel at all times can be devised to automatically compensate for other fuels.

AC 29.1337A. § 29.1337 (Amendment 29-26) POWERPLANT INSTRUMENTS.

a. Explanation. Amendment 29-26 adds § 29.1337(e) that requires certain rotor drive system transmissions and gearboxes to be equipped with chip detector systems. These detectors will sense and signal the presence of ferromagnetic particles to the flight crew. The rule also requires a means to permit the crewmembers to check, in flight, the function of each detector's electrical circuit and signal. This amendment will improve the level of safety available with the installation of chip detector systems.

b. Procedures. All of the policy material pertaining to this section remains in effect. Additionally, the following information is added about chip detectors. The chip detectors should:

(1) Indicate the presence of ferromagnetic particles in the transmission or gearbox;

(2) Be easily removable for inspection of the magnetic poles for metallic chips; and,

(3) Prevent the loss of lubricant in the event of failure of the retention device for the removable portion of the chip detector (debris monitor).

(4) Provide a test system to allow the crew to check, in flight, the function of each detector and wiring. The test circuit should test, at least, as much of the circuitry as reasonably possible. Where detectors are used that have a test feature in the form of an extra pin, all of the circuit, exclusive of the detector may be tested. Some chip detectors have a fuzz burner capability to eliminate nuisance indication of non-relevant conducting materials that result from oil contamination and very small wear particles.

SUBPART F - EQUIPMENT

ELECTRICAL SYSTEMS AND EQUIPMENT

AC 29.1351. § 29.1351 (Amendment 29-40) ELECTRICAL SYSTEMS AND EQUIPMENT -GENERAL.

a. Explanation. With the advent of more sophisticated rotorcraft and operations under more critical conditions, such as IFR and icing, it is essential that the electrical system be very carefully analyzed and evaluated to assure proper operation under any foreseeable operating condition, and that hazards do not result from any malfunctions or failures.

b. Procedures.

(1) An acceptable method of preparing an electrical load analysis is given by Military Specification MIL-E-7016F, and use of this standard is preferred since it has been received widespread acceptance. If other formats have been used and have been considered acceptable, their continued use is encouraged.

(2) Generating systems must be analyzed, inspected, or tested to assure conformance to the following criteria.

(i) For Category A, the generating system must perform as specified in § 29.1309(d) and (e).

(ii) No probable malfunction in the generating system or in the generator drive system may result in the permanent loss of service to electric utilization systems, which are necessary to maintain controlled flight and to effect a safe landing, unless the aircraft is equipped with an independent source of electrical power capable of supplying continuous emergency service to these utilization systems. A probable malfunction is any single electrical or mechanical malfunction or failure which is considered probable on the basis of past service experience with similar components in aircraft applications. This definition should be extended to multiple malfunctions when:

(A) The first malfunction would not be detected during normal operation of the system, including periodic checks established at intervals which are consistent with the degree of hazard involved; or

(B) The first malfunction would inevitably lead to other malfunctions.

(3) The generator drive system includes the prime movers (propulsion engines or other) and coupling devices such as gear boxes or constant speed drives.

(4) An electric utilization system is a system of electric equipment, devices, and connected wiring which utilizes electric energy to perform a specific aircraft function.

(5) The specific electric utilization systems, which are necessary to maintain controlled flight and effect a safe landing, will vary with the type of aircraft and with the nature of the operation in which the aircraft is utilized. Examples of systems which may be in this category are as follows: basic flight instruments, minimum navigation equipment, minimum radio communications, and control system boost.

(6) Where crew corrective action is necessary,

(i) Adequate warning should be provided for any malfunction or failure requiring such corrective action.

(ii) Controls should be so located as to permit such corrective action during any probable flight situation.

(iii) If corrective action must be taken within a specified time interval for continued safe operation of the generating system, it should be demonstrated that such corrective action can be accomplished within the specified time interval during any probable flight situation. For Category A rotorcraft, compliance with § 29.903(b)(2) must be considered.

(iv) The procedure to be followed by the crew should be detailed in the Rotorcraft Flight Manual.

(7) Voltage and current supplied by each generator are considered essential parameters for definition of system operation and most systems are provided with voltmeters and ammeters to display these parameters to the crew. Some recent designs have annunciated safe operation of each generator with lights and have eliminated the voltmeter and ammeter. For these systems, in addition to distribution system design precautions, parameters such as over and under voltage, reverse current sensing, feeder ground faults, and over and under frequency (AC generators only) are being monitored and provided as inputs to the generator annunciators. For systems not incorporating voltmeters and ammeters, and with automatic protective switching and annunciator lights, the pilot should be provided as a minimum, with sufficient information to determine the type of fault, and to identify portions of the system that have been lost. If additional limitations such as maximum loading of portions of the system are necessary to account for fault conditions, that information should be made available to appropriate personnel (crew, owner, modifier, etc.) to assure the limits are not exceeded.

(8) For rotorcraft with a certification basis of FAR 29 after Amendment 29-14 (effective on July 18, 1977), the electrical wire and cable insulation and other materials used to show compliance with § 29.1351(d) must be self-extinguishing when tested in accordance with Part 25 Appendix F. This means the wire must be tested at an angle

of 60° in accordance with the applicable portions of Appendix F of FAR 25 which contain acceptable test procedures and define burn length.

(9) An area where a possibly hazardous malfunction of an electrical power source might occur is the supply of cooling air to the electrical generators. The hazard exists because the failure of a generator bearing usually produces metallic sparks and hot surfaces which are a potential ignition source. Consideration should be given to this failure. One method is if the generator is rated explosion proof, then the intake and output of cooling air into the engine compartment should not cause a hazard. If the generator is not rated explosion-proof and a failed bearing test cannot conclusively demonstrate that failure of the generator will not produce an ignition source, then cooling air should be ducted into and out of the generator from outside the aircraft. The ducting material should be sufficient to contain the failed generator fragments.

(10) Generator ratings are often the result of installation temperature limitations. The determination of these limitations, if any, is by testing the actual installation. The procedures for performing generator cooling tests are as follows:

(i) Test Requirements.

(A) General. The applicant should contact the generator (alternator) manufacturer and obtain the maximum limits for the unit to be tested. This will normally be in terms of temperatures at various locations within the unit (stator, bearings, diodes, heat sinks, brushes, etc.) or in terms of pressure drop across the generator. The manufacturer should either supply an instrumented unit or give complete details for instrumenting the test unit.

(B) Instrumentation.

(1) Load Bank. A load bank will usually be necessary to load the test unit to the amperage limit for which approval is requested.

(2) Ammeter. An ammeter should be provided with sufficient resolution to assure the amperage load is being maintained at the desired level.

(3) Temperature/Pressure Readouts. Readouts which are compatible with the temperature or pressure sensors installed in the test unit should be provided.

(4) Calibration Records. Calibration records should be available for all instrumentation.

(5) Recordings. Permanent recordings should be provided for time, temperatures, current and/or pressure. The recording device should have provisions for placing event marks on the recording medium.

(C) Regulatory References. Sections 29.1301, 29.1309, 29.1351, 29.1363(b), 29.1521(e), 29.1041, 29.1043, 29.1045, 29.1047, and 29.1049.

(D) Miscellaneous. The results obtained from the tests should be corrected for hot day conditions using a standard lapse rate (3.6° F/1,000 feet). The tests are conducted to determine the maximum generator capacity that does not result in surpassing the limits given from the manufacturer. This is for a continuous rating, any credit for short time over current ratings must also be verified by the same methods, particularly for short time ratings longer than 5 seconds.

(ii) Test Procedures.

(A) Single Engine Procedure.

(1) The cooling test is to be conducted during ground operation, climb-out, cruise, approach, and hover flight regimes.

(2) All ground operational and in-ground effect hover tests should be conducted in ambient winds of 5 knots or less. Wind direction relative to the aircraft should be from the most critical direction.

(3) The battery may be connected to the bus during the generator/alternator cooling test. The generator/alternator temperatures should be recorded at intervals sufficiently close to show the rate of temperature increase and stabilization. The temperature may be considered stabilized when it peaks and has not increased in the last 5 minutes. The climb-out speed and power setting should correspond to the best rate of climb speed, using maximum continuous power or any other normal conditions of climb that would cause the generator/alternator temperatures to be critical. The cruise test should be conducted at maximum altitude in the cruise configuration. Generator/alternator cooling should be conducted at rated output consistent with the RPM at which it is operating. For instance, during the ground tests the engine RPM may be lower than that necessary to sustain maximum rated amperage output. In this case the maximum amperage output of the generator/alternator corresponding to the lower RPM should be assured.

(4) The test sequence should begin with about 30 minutes of ground operation to account for taxi and holding times, and end 5 minutes after all temperatures have peaked after engine shut down.

(B) Multi-engine Procedures. Conduct a generator cooling test in accordance with the following procedure:

(1) All ground operational and in-ground effect hover tests should be conducted in ambient winds of 5 knots or less. Wind direction relative to the aircraft should be from the most critical direction.

(2) After engine start, load the instrumented generator to its proposed amperage limit and begin recording temperatures.

(3) A total of 30 minutes should be spent on the ground prior to takeoff. This is to account for taxi and holding times.

(4) After takeoff, climb at single-engine best-rate-of-climb speed using maximum continuous power, to the single-engine service ceiling. Above this, continue at twin-engine best-rate-of-climb speed, using maximum continuous power on both engines, to maximum altitude.

(5) Cruise at maximum altitude until all generator temperatures stabilize. Temperatures shall be considered stabilized when they have peaked and have not increased for a period of 5 minutes.

(6) Descend, conduct an approach to include a go-around, hover until temperature stabilizes, then land and continue to record temperatures after shut-down until 5 minutes after all temperatures have peaked.

(7) Conduct cooling tests with the rotorcraft hovering at both the minimum and maximum hover altitudes.

(8) Correct all results for hot day conditions. Use the standard lapse rate of 3.6° F/1,000 feet for consideration of altitude. See paragraph AC 29.1309b(2)(i) for details on temperature correction.

(C) Manufacturer's Limits. If at any time during the testing it appears the manufacturer's limits are to be exceeded, the amperage load on the test generator/alternator should be reduced to prevent this from happening.

(D) Miscellaneous. The results obtained from the tests should be corrected for hot day conditions using a standard lapse rate (3.6° F/1,000 feet). The tests are conducted to determine the maximum generator capacity that does not result in surpassing the limits given from the manufacturer. This is for a continuous rating; any credit for short time over current ratings must also be verified by the same methods, particularly for short time ratings longer than 5 seconds.

c. Operation with normal electrical power generating system inoperative. See FAR 29.1351(d).

(1) Definition: Normal electrical power generating system. The term normal electrical power generating system is intended to include all electrical power sources used for operation of the rotorcraft under any approved normal operating condition (VFR, IFR, Icing, etc.), not including batteries and emergency electrical power sources.

(2) All rotorcraft (See FAR 29.1351(d)(1) Amendment 29-40).

(i) FAR 29.1351(d)(1) requires, for all rotorcraft, continued safe VFR operation for a period of at least 5 minutes with the normal electrical power system inoperative. If loss of the normal electrical power generating system, followed by depletion of battery power, could prevent safe flight and landing, adequate warning of loss of the normal electrical power generating system should be provided for compliance with FAR 29.1309(c), and Flight Manual procedures compatible with the available battery endurance should be provided.

(ii) One possible cause of loss of the normal electrical power generating system is engine failure. The requirement specifies consideration of engine flameout and restart attempts. A minimum battery endurance of 5 minutes is specified. To ensure safe operation under all conditions, however, the battery endurance should be not less than the time required for an autorotative descent to sea level from the maximum operating altitude. Where applicable, allowance should be made for the use of the batteries for attempts to restart the engines during the descent. It may be necessary to include limitations on the number of attempted starts or to provide a separate dedicated battery for such purposes.

(3) Category A rotorcraft (See FAR 29.1351(d)(2) Amendment 29-40).

(i) FAR 29.1351(d)(2) is applicable to Category A rotorcraft and requires that provision be made to ensure adequate electrical supplies to those systems which are necessary for continued safe flight and landing in the event of a failure of all normal generated electrical power. All components and wiring of the alternate supplies should be physically and electrically segregated from the normal system and should be such that no single failure, including the effects of fire, the cutting of a cable bundle, or the loss of a junction box or control panel will affect both normal and alternate supplies.

(ii) In considering the systems which should remain available following the loss of the normal electrical power generating system, consideration should be given to the role and flight conditions of the rotorcraft and the possible duration of flight time to reach a suitable landing site and make a safe landing.

(iii) The systems required by FAR 29.1351(d)(2) may differ between rotorcraft types and roles and should be agreed with the Authority. They should normally include:

(A) Attitude information;

(B) Radio communication and flight crew intercommunication;

(C) Navigation;

(D) Cockpit and instrument lighting;

(E) Heading, airspeed and altitude information, including appropriate pitot head heating;

(F) Adequate flight controls;

(G) Adequate engine instrumentation and control;

(H) Such warnings, cautions, and indications as are required for continued safe flight and landing;

(I) Any other services required for continued safe flight and landing; e.g. fire extinguishing, emergency flotation equipment, landing light.

(iv) Emergency Power Source Duration and Integrity

(A) Time Limited Power Source. Where an emergency power source provided to comply with FAR 29.1351(d)(2) is time limited (e.g., battery), the required duration will depend on the type and role of the rotorcraft. Unless it can be shown that a lesser time is adequate, such a power source should have an endurance of at least half the rotorcraft endurance, or the Flight Manual limitations section should define aircraft endurance. However, an endurance of less than 30 minutes would not normally be acceptable. The endurance, with any associated procedures, should be specified in the Flight Manual. The endurance time should be determined by calculation or test, due allowance being made for-

(1) Delays in flight crew recognition of failures and completion of the appropriate drills where flight crew action is necessary. This should be assumed to be 5 minutes provided that the failure warning system has clear and unambiguous attention-getting characteristics and where such a delay is compatible with the crew's primary attention being given to the corresponding emergency procedures and/or other possible related failures such as engine fire, fumes in the cockpit, etc. A delay of less than 5 minutes may be acceptable if justified by simple procedures or an adequate degree of automation.

(2) The minimum voltage acceptable for the required loads, the battery state of charge, the minimum capacity permitted during service life and the battery efficiency at the discharge rates and temperatures likely to be experienced. Unless otherwise agreed for the purpose of this calculation, a battery capacity at normal ambient conditions of 80 percent of the nameplate rated capacity, at the 1 hour rate, and a 90 percent state of charge, may be assumed (i.e., 72 percent of nominal demonstrated rated capacity at +20° C).

(3) For those rotorcraft where the battery is also used for engine or APU starting on the ground, it should be shown that following engine starts, the charge rate of the battery is such that the battery is maintained in a state of charge that will ensure

adequate emergency power source duration should a failure of generated power occur shortly after takeoff.

NOTE: This could, for example, be achieved by ensuring that, following battery-powered starting, the battery charging current has fallen to a specified level prior to take-off.

(B) Non-time-limited Power Source. Where an emergency power source is provided by a non-time-limited source (e.g., standby generator driven by APU, transmission, pneumatic or hydraulic motor), due account should be taken of any limitation imposed by rotorcraft speed, altitude, etc., which may affect the capabilities of that power source. In considering the power source, account should be taken of the following:

(1) Auxiliary Power Unit (APU).

(i) An APU capable of continuous operation throughout an adequate flight envelope may be considered an acceptable means of supplying electrical power to the required services provided that its air start capability is adequate and may be guaranteed. Where, however, the APU is dependent for its starting current on a battery source which is supplying critical loads, such starting loads may prejudice the time duration of the flight if APU start is not achieved.

(ii) It may be necessary, therefore, to include limitations on the number of attempted starts or to provide a separate battery for APU starting, if this method of supplying electrical power is adopted. Consideration should also be given to the equipment, services and duration required prior to the APU generator coming on-line. Common failures which could affect the operation of all engines and the APU (e.g., fuel supply) should be taken into consideration.

(2) Transmission-driven Generator.

(i) A transmission-driven generator may be utilized to provide an emergency electrical power source, but due consideration should be given to ensuring that the means of bringing the generator into use are not dependent on a source which may have been lost as a result of the original failure.

(ii) The continuity of electrical power to those services, which should remain operative without crew action prior to the generator being brought into operation, may necessitate the use of a battery, unless the operation of the emergency power source is automatic and immediate in the event of failure of the normal electrical power generating system.

(3) Pneumatic or Hydraulic Motor Driven Power Source. A pneumatic- or hydraulic-motor-driven electrical power source may be utilized subject to the same constraints on activation as the transmission-driven generator (See 3.4.2(b)). Care

should be taken in ensuring that the operation of the pneumatic or hydraulic system is not prejudiced by faults leading to, or resulting from, the original failure, including the loss of, or inability to restart engines.

AC 29.1353. § 29.1353 (Amendment 29-14) ELECTRICAL EQUIPMENT AND INSTALLATIONS.

a. Explanation.

(1) Electrical equipment, controls, and wiring must be installed so that operation of any one unit or system of units will not adversely affect the simultaneous operation of any other electrical unit or system essential to safe operation. Additionally, wiring installation design should be documented sufficiently to maintain configuration control for manufacturing and to assure that the electromagnetic characteristics remain the same as the certification sample.

(2) Results of qualification testing should be available to ensure that the installation of equipment or a system will not result in adverse interference being introduced into the rotorcraft electrical equipment. A good reference for interference testing is the applicable version of Radio Technical Commission of Aeronautics (RTCA) Document No. DO-160, “Environmental Conditions and Test Procedures for Airborne Equipment.”

(3) The DO-160 type tests would normally be accomplished by the equipment manufacturer. The airframe manufacturer’s test are normally more subjective and are oriented more toward watching for unwanted meter movement, noise in the interphone systems, and so forth. The combination of the equipment manufacturer’s tests, supplemented by the airframe manufacturer’s installation tests, should be adequate to assure compliance with this regulation.

b. Procedures.

(1) General. Chapter II of Advisory Circular 43.13-1A, “Acceptable Methods, Techniques, and Practices: Aircraft Inspection and Repair,“ includes considerable guidance regarding the installation of electrical systems (routing, separation, typing, clamping, j-box installations, etc.). The following areas are overlooked in many cases and special emphasis should be placed on them during the compliance inspection of the rotorcraft:

(i) Feeder wires from the rotorcraft’s generators and batteries should be routed separately from utilization system wiring.

(ii) Generator field wiring should be routed separately from generator output wiring. This should begin at the generator and continue to the voltage regulator.

(2) Battery Installation.

(i) As part of the electrical system evaluation, the battery installation should be reviewed to assure the battery is vented and drained. If there is some doubt regarding the ability of the drain to satisfactorily dispose of corrosive fluids, TIA tests should be conducted to resolve the issue. Normally this is done by expelling a dye solution through the drain system during different phases of flight to assure that fluids are drained clear of the rotorcraft. Some aircraft rely on the installation of a sump jar to dispose of corrosive fluids.

(ii) In nickel cadmium batteries are used for engine starts and compliance with § 29.1353(c)(6) is achieved through the use of a temperature monitoring system, the temperature sensor should be located in a position that will most accurately reflect the internal battery temperature without causing adverse effects to the sensor. The location normally used is near the center of the battery. If the sensor is placed between two cells, the indication should be very close to the actual temperature within the cell. If the sensor is placed in a cell strap, there will normally be a period of time just after a heavy current drain (e.g., engine start) when the sensor shows a temperature that is hotter than the actual cell temperature.

(iii) Other aspects of the battery installation can be resolved by reviewing § 29.1353(c), AC 43.13-1A, and AC 43.13-2A, “Acceptable Methods, Techniques, and Practices Aircraft Alterations.”

(iv) Battery replacement with other than the original, in electrical systems that are required to have fault clearing features, will require analysis and tests to show that the fault clearing design has not been affected. There are high rate discharge types of batteries that have different internal impedences from slow rate discharge batteries and the reaction in a fault clearing circuit is completely different between the two types. Additionally, the amp-hour rating of nickel cadmium batteries versus lead acid are not the same from a usable aspect. Nickel cadmium batteries voltage discharge curve allows most of the amp hour capacity to be usable from a voltage standpoint, but only about 66% of a lead acid battery amp hour capacity is usable. Any change to the original type design should consider these limitations.

AC 29.1355. <u>§ 29.1355 (Amendment 29-14) DISTRIBUTION SYSTEM</u>.

a. <u>Explanation</u>. None.

b. <u>Procedures</u>.

(1) When determining compliance with the portion of the rule that concerns supplying essential circuits in the event of reasonably probable faults or open circuits, the effects of tripped circuit breakers or blown fuses should be considered.

(2) Various means may be used to ensure an energy supply. Examples include duplicate electrical equipment, throwover switching, and multichannel or loop circuits separately routed.

(3) Essential load circuits are those circuits whose functioning is required to show regulatory compliance with the certification basis. In addition to those circuits specifically required by the regulations, this definition also includes those circuits required by general rules such as § 29.1309.

(4) An independent power source includes not only the electrical power source (e.g., generator) but other items such as a regulator or a reverse current cutout that are necessary to make the electrical power source deliver power to a distribution bus. When a regulatory requirement exists for two independent power sources, the required items should not be shared.

(5) Electrical system faults may occur that will result in a portion of the system (feeders, buses, etc.) being lost. Where portions of the electrical system may be switched from one power source to another to compensate for a fault, it is important that the transfer action not result in the loss of the replacement source. Circuit design should be such as to assure this will not happen.

AC 29.1355A. § 29.1355 (Amendment 29-24) DISTRIBUTION SYSTEM.

a. Explanation. Amendment 29-24 provides clarification for availability of the remaining electrical power source after a failure of one of two independent power sources.

b. Procedures. All of the policy material pertaining to this section remains in effect with the addition that an automatic or manually selectable means is required to maintain operation of the equipment or system for which the two independent power sources were required.

AC 29.1357. § 29.1357 CIRCUIT PROTECTIVE DEVICES.

a. Explanation. Circuit protective devices are normally installed to limit the hazardous consequences of overloaded or faulted circuits. These devices are resettable (circuit breakers) or replaceable (fuses) to permit the crew to restore service when nuisance trips occur or when the abnormal circuit condition can be corrected in flight.

b. Procedures.

(1) Overvoltage protection is specifically required for Category A rotorcraft. For Category B rotorcraft, the possible types of operation should be considered in combination with the presence of an overvoltage condition in the generating system. The regulatory requirement to support this assumption is § 29.1309(b). If the presence

of an overvoltage condition in the electrical system will not cause a hazard to the rotorcraft, the electrical system could be approved for Category B without overvoltage protection. If a hazardous condition will result from the overvoltage condition, then overvoltage protection must be provided.

(2) Automatic reset circuit breakers, which automatically reset themselves periodically, should not be applied as circuit protective devices. If an abnormal circuit condition cannot be corrected in flight, the decision to restore power to the circuit involves a careful analysis of the flight situation. The necessity of the circuit for continued safe flight should be weighed against the hazards of resetting on a possibly faulted circuit. Such an evaluation is properly an aircraft crew function which cannot be performed by automatic reset circuit breakers. To assure crew supervision over the reset operation, circuit protective devices should be of such design that a manual operation is required to restore service after tripping. Circuit breakers must be designed such that the tripping mechanism cannot be overridden by the operating control, and these circuit breakers are known as the “trip free” type.

(3) Automatic reset circuit breakers may be used as integral protectors for electrical equipment (e.g., thermal cutouts) provided that circuit protection is also installed to protect the cable to the equipment.

(4) If the installation of a system is required as a prerequisite to showing compliance with the regulations, it is generally considered to be essential to some phase of flight or it would not be required. It follows from this that the circuit protective device associated with those systems is generally considered to be essential for safety in flight and should therefore be accessible to the crew in the cockpit. This includes the basic electrical system, the distribution system, and utilization systems that are required. Some examples of required utilization systems are those specified by §§ 29.1303, 29.1305, 29.1307, 29.1381, 29.1383, 29.1385, 29.1401, and 29.1431. Where continued safe flight to the destination is considered to be sufficiently assured, certain required circuits have been excepted from being accessible to the crew in the cockpit. Voltmeter and ammeter circuit protective devices are examples of ones that have been excepted. Some utilization systems, although not specifically required by FAR 29, may be required because of the particular design presented for certification. Circuit protective devices for systems in this category are considered to be required and must be accessible.

(5) The following are considered to be acceptable compliance with the “readily reset” provision of § 29.1357(d).

(i) For a crew of two pilots, it is satisfactory for one of the crewmembers to move his seat and loosen his shoulder harness in order to properly identify and reset or replace a circuit protective device. It is not satisfactory for one of the crewmembers to leave his crew station to reset the circuit protective device.

(ii) For a single pilot situation, with the seat belt and shoulder harness normally adjusted, the circuit protective device location should allow for identification of the opened circuit protector and reset capability while the pilot is flying the rotorcraft.

(6) If fuses are used, there should be spare fuses for use in flight equal to at least 50 percent of the number of fuses for each rating required for complete circuit protection. This only applies to fuses used to protect systems that are required to show compliance with the regulations. Spare provisions need not be made for nonrequired convenience type installations although it is encouraged. The spare fuses should be stored in a location where they are readily accessible to the crew. If not directly visible to the crew, information regarding location of the spare fuses should be provided. One acceptable location is on the fuse panel in a holder with no wire terminations and identified “spare” with the “size.”

(7) Refer to paragraph AC 29 MG 2 for specific tests of circuit protection for the total electrical system.

AC 29.1357A. § 29.1357 (Amendment 29-24) CIRCUIT PROTECTIVE DEVICES.

a. Explanation. Amendment 29-24 to the regulations provides the requirements for automatic reset circuit breakers and expands the requirements for disconnecting power sources and transmission equipment to include other malfunctions besides overvoltage. The overvoltage protection requirements are extended to both Category A and Category B rotorcraft. Clarification was added to the requirement for each essential load to have individual circuit protection.

b. Procedures.

(1) All of the policy material pertaining to this section remains in effect except that protection from hazardous overvoltage and other malfunctions that would damage equipment should be provided for both Category A and Category B rotorcraft. The protective sensing/switching devices should disconnect the overvoltage or other malfunctions with sufficient speed to prevent user equipment damage.

(2) In addition, each essential load should have individual circuit protection. This generally means each electrical power consuming device should have individual protection. An exception may be simple systems with multiple lights in a single lighting system which would, in most cases, require only one circuit protective device. The decision of whether one or more protective devices are required, is based on how independent each of the loads should be to one another and what the penalty would be if one load faulted and deprived the remaining loads of electrical power.

AC 29.1359. § 29.1359 ELECTRICAL SYSTEM FIRE AND SMOKE PROTECTION.

a. Explanation. This regulation requires that all electrical system components meet the applicable fire and smoke protection provisions of §§ 29.831 and 29.863, and

further requires that certain items in designated fire zones must be at least fire resistant. This regulation becomes very significant when failure conditions are considered, and in accordance with the provisions of § 29.831 “reasonably probable failures” must be considered when assuring compliance.

b. Procedures.

(1) When selecting a type of wire, the burning characteristics of that wire are important. Both composition and quantity of resultant smoke and fumes should be considered. The impact of the smoke and fumes on the aircraft cabin occupants should be accounted for.

(2) Wire qualified to MIL-W-25038 is normally used in circuits that “must be at least fire resistant.” Wire qualified to other specifications may also be satisfactory; however, the provisions of the other specifications should be compared to the provisions of MIL-W-25038 to assure the critical areas are not compromised.

(3) Electrical connectors that are located in a designated fire zone and are used in emergency procedures should be at least fire resistant and capable of maintaining the integrity of the circuit. When evaluating these connectors, careful attention should be directed to the entire connector (the contact, the insert, and the shell).

(4) Wire insulated with KAPTON® polyimide film manufactured to MIL-W-81381A, has been used in aeronautical products with varying degrees of success. The U.S. Navy had such a bad service history with KAPTON® insulated interconnect wire in aircraft that in the mid-1980’s the Navy no longer allowed the use of KAPTON® insulated wire. Although the FAA/AUTHORITY has taken no such action, the use of KAPTON® insulated wire requires very special handling. The following areas should be observed when utilizing KAPTON® insulated wire:

(i) The instructions in the KAPTON® wire “Handling Manual” should be strictly followed. This manual may be obtained from E.I. Du Pont de Nemours and Company, Polymer Products Department, Industrial Film Division, Wilmington, Delaware 19898.

(ii) Use in special wind and moisture problem (SWAMP) areas, such as wheel wells, usually requires additional protection for the cable bundles.

(iii) The wire should not be exposed to a combination of either high stress (U.V. or physical) in the presence of water, high humidity, or high pH factor liquids.

(iv) The stiffness and permanent set (memory) of KAPTON® may cause chafing in unrestrained bundles or where KAPTON® insulated wire is bundled with wires of other insulation types.

(v) Care should be exercised in the stripping, stamping, and terminating of KAPTON® insulated wires.

NOTE: KAPTON® is a registered trademark of E.I. Du Pont de Nemours and Company.

AC 29.1363. § 29.1363 ELECTRICAL SYSTEMS TESTS.

a. Explanation. Most of this rule is self-explanatory. Since other regulatory paragraphs also contain requirements regarding functioning and malfunctioning of the electrical system, a recommended test procedure has been included in paragraph AC 29 MG 2 instead of being made a part of this paragraph.

b. Procedures.

(1) Reference paragraph AC 29 MG 2 for a recommended test procedure.

(2) When simulating the electrical characteristics of the distribution system wiring, emphasis should be placed on duplicating the type, gage, and length of the wiring being evaluated. As much as possible, cable bundling and grounding considerations should also be duplicated.

(3) Most laboratory test connected loads would normally be in the form of load banks rather than providing the actual aircraft system. If load banks are used during laboratory testing, additional consideration should be given to these loads when an actual aircraft installation is available.

(4) Limited aircraft testing should also be accomplished to verify that the response of the laboratory drives does adequately simulate the response of the rotorcraft engines under normal and malfunction conditions.

SUBPART F - EQUIPMENT

LIGHTS

AC 29.1381. § 29.1381 INSTRUMENT LIGHTS.

a. Explanation. This section provides minimum performance standards for the instrument lighting system. Section 29.1309(b) is used to evaluate the malfunction aspects of the system. If appropriate, § 29.1309(a) is used to evaluate the equipment under environmental considerations.

b. Procedures.

(1) The overall instrument lighting system should be designed and installed such that single failures that occur will not result in the loss of both primary and secondary (backup) lighting for any instrument or area of the cockpit. In some instances, the system is divided such that the controls for the pilot's panel are separate from the copilot's panel and both of these are separate from the center panel. The ideal is to divide the system such that the impact of single failures will be minimized.

(2) Secondary (backup) instrument lighting should be provided, and this is accomplished in some instances by eyebrow lights. A system that provides general cockpit lighting from a source in the aft area of the cockpit is normally not acceptable since normal positioning and movement of the crew will block this type of light.

(3) The standard does not specify any color requirements for instrument lighting. White is normally provided. The color provided should ensure that the color coding of the instruments is readily identifiable.

(4) The final installed system should be evaluated by a flight test pilot. An actual night flight should be conducted for initial certification of an aircraft. In some instances the vibration characteristics and other flight-induced factors have been demonstrated to seriously affect the pilot's ability to see in the cockpit environment at night. Evaluations following modifications may be conducted with a darkened cockpit on the ground. It should be verified that direct rays are shielded from the pilot's eyes, and that objectionable reflections do not exist. The pilot should also assume failures of various controls, electrical busses, etc., to account for all appropriate failures.

(5) In some instances manufacturers have provided high intensity instrument lighting systems as an option associated with IFR approvals. If provided, this capability should be included in the overall evaluation of the instrument lighting system.

AC 29.1383. § 29.1383 LANDING LIGHTS.

a. Explanation. This section provides minimum performance standards for the installation and normal operation of the landing lights. Certification to this standard is all that is required for approval of the rotorcraft; however, the different operating rules should also be reviewed since they may contain additional requirements. The malfunction considerations are based on the provisions of § 29.1309(b).

b. Procedures.

(1) The performance requirements of this standard are normally evaluated by a flight test pilot, and usually are included in the Type Inspection Authorization as part of the evaluation to be conducted at night.

(2) The installation of the landing light unit(s) should be very carefully evaluated. Many of the units provided are stowed until needed and then driven to their operating position by an electric motor. If this type of light unit is provided, the possibility of its contact with fuel fumes should be considered. Installations that have this problem normally require the use of light units qualified as explosion proof. The installation should also be reviewed to determine if a single failure can cause the light to be on in the stowed position. If the light can be on, the potential for overheating or fire in the adjacent area should be considered.

AC 29.1385. § 29.1385 POSITION LIGHT SYSTEM INSTALLATION. Refer to AC 20-74, Aircraft Position and Anticollision Light Measurements, July 29, 1971.

AC 29.1387. § 29.1387 (Amendment 29-9) POSITION LIGHT SYSTEM DIHEDRAL ANGLES. Refer to AC 20-74.

AC 29.1389. § 29.1389 POSITION LIGHT DISTRIBUTION AND INTENSITIES. Refer to AC 20-74.

AC 29.1391. § 29.1391 MINIMUM INTENSITIES IN THE HORIZONTAL PLANE OF FORWARD AND REAR POSITION LIGHTS. Refer to AC 20-74.

AC 29.1393. § 29.1393 MINIMUM INTENSITIES IN ANY VERTICAL PLANE OF FORWARD AND REAR POSITION LIGHTS. Refer to AC 20-74.

AC 29.1395. § 29.1395 MAXIMUM INTENSITIES IN OVERLAPPING BEAMS OF FORWARD AND REAR POSITION LIGHTS. Refer to AC 20-74.

AC 29.1397. § 29.1397 (Amendment 29-7) COLOR SPECIFICATIONS. Refer to AC 20-74.

AC 29.1399. § 29.1399 RIDING LIGHT.

a. Explanation. The riding light is an amphibious operation requirement. The function of this light is to make the rotorcraft visible at night to other vessels when the rotorcraft has landed on water. A very important point which should be remembered is that when a rotorcraft has landed on the water and is not in flight, it is considered a vessel in accordance with the United States Coast Guard (USCG) navigation rules (Inland Navigation Rules Act of 1980). If water operations are contemplated, one should acquire the USCG Navigation Rules, COMDTINST M16672.2A, which are for sale from Superintendent of Documents, U.S. Government Printing Office, Washington, D.C. 20402.

b. Procedures. A white light should be installed in a position where it will show the maximum unbroken light for a horizontal arc of 360° around the rotorcraft. If possible, this light should not be obscured by sectors of more than 6°. The light should be installed to meet the malfunction requirements of § 29.1309(b) (reference paragraph AC 29.1309). For the purpose of this light, the following definition found in the Inland Navigation Rules, 33 CFR 84.13, Color specification of lights, and 33 CFR 84.15, Intensity of lights, applies:

(1) The chromaticity of white lights shall conform to the following standards, which lie within the boundaries of the area of the diagram specified for each color by the International Commission on Illumination (CIE), in the “Colors of Light Signals,” which is incorporated by reference. It is Publication CIE No. 2.2 (TC-1.6), 1975, and is available from the Illumination Engineering Society, 345 East 47th Street, New York, NY 10017. It is also available for inspection at the Office of the Federal Register, Room 8401, 1100 L Street NW., Washington, D.C. 20408.

(2) The boundaries of the area for white are given by indicating the corner coordinates, which are as follows:

X	0.525	0.525	0.452	0.310	0.310	0.443
Y	0.382	0.440	0.440	0.348	0.283	0.382

and 33 CFR 84.15 defines the required luminosity to be visible on a clear night for 2 nautical miles. The minimum luminosity of the light is given by the formula:

$$I = 3.43 \times 10^{6} \times T \times D^{2} \times K^{-D}$$

where: I is luminous intensity in candelas under service conditions,
T is threshold factor 2×10^{-7} lux,
D is range of visibility (luminous range) of the light in nautical miles, and
K is atmospheric transmissivity. For the prescribed lights the value of K shall be 0.8, corresponding to a meteorological visibility of approximately 13 nautical miles.

(3) Solving this formula indicates a minimum intensity of 4.3 candelas is required for this light.

NOTE: The FAR and the USCG navigation rules may be satisfied by an externally hung light(s). One method of compliance would be to use USCG approved all-around lights which are of the appropriate luminosity and externally hung.

AC 29.1401. § 29.1401 (Amendment 29-11) ANTICOLLISION LIGHT SYSTEM.

(1) Certification for night operations requires an approved aviation red anticollision light. Determination of the location and how many anticollision lights are required to satisfy the regulations are functions of aircraft shape and the ability to obtain the required area coverage and light intensity. A detailed explanation of how to calculate the measured area coverage required by § 29.1401(b) is given in AC 20-30B. An explanation of the methods used to measure and calculate the light intensity and color required by § 29.1401(e) are explained in AC 20-74.

(2) The anticollision light(s) should be located to obtain the required coverage and to prevent cockpit reflections that would affect the crew's vision. The anticollision lights are required to be red to reduce cockpit reflections and objectionable effect of rotor blade strobing. During the period of August 11, 1971, through February 4, 1976, white lights were permitted by the rules; however, white lights resulted in undesirable cockpit reflections at night and in close proximity to clouds. For these reasons, white lights are not considered to be satisfactory in all operating conditions.
Section 29.1401(b) was changed in 1976 to require a red anticollision light. White lights have been approved for installation on rotorcraft when they were installed in addition to the required red lights, if an independent control for the white light was provided that allowed the pilot to eliminate any adverse cockpit reflections.

SUBPART F - EQUIPMENT

SAFETY EQUIPMENT

AC 29.1411. § 29.1411 SAFETY EQUIPMENT - GENERAL.

a. Explanation.

(1) This section contains requirements for the accessibility and stowage of required safety equipment. Compliance with this section should assure that:

(i) Locations for stowage of all required safety equipment have been provided.

(ii) Safety equipment is readily accessible to both crewmembers and passengers, as appropriate, during any reasonably probable emergency situation.

(iii) Stowage locations for all required safety equipment will adequately protect such equipment from inadvertent damage during normal operations.

(iv) Safety equipment stowage provisions will protect the equipment from damage during emergency landings when subjected to the inertia loads specified in § 29.561.

(2) It is a frequent practice for the rotorcraft manufacturer to provide the substantiation for only those portions of the ditching requirements relating to aircraft flotation and ditching emergency exits. Completion of the ditching certification to include the safety equipment installation and stowage provisions is then left to the affected operator so that those aspects can best be adopted to the selected cabin interior. In such cases, the “Limitations” section of the Rotorcraft Flight Manual should identify the substantiations yet to be accomplished in order to justify the full ditching approval. The operator (or modifier) performing these final installations is then concerned directly with the details of this paragraph. Any aspects of the basic rotorcraft flotation and emergency exits approval that are not compatible with the modifier’s proposed safety equipment provisions should be resolved between the type certificate holder and the modifier prior to FAA/AUTHORITY approval for ditching.
(See paragraphs AC 29.801a(9) and AC 29.1415a(3).)

b. Procedures.

(1) A cockpit evaluation should be conducted to demonstrate that all required emergency safety equipment to be used by the crew will be readily accessible during any probable emergency situation. This evaluation should include, for example, emergency flotation equipment actuation devices, remote life raft releases, hand fire extinguishers, and protective breathing equipment.

(2) Stowage provisions for safety equipment shown to be compatible with the vehicle configuration presented for certification should be provided and identified so that:

(i) Equipment is readily accessible regardless of operational configuration.

(ii) Stored equipment is free from inadvertent damage from passengers and handling.

(iii) Stored equipment is adequately restrained to withstand the inertia forces specified in § 29.561(b)(3) without sustaining damage.

(3) For rotorcraft required to have an emergency descent slide or rope according to § 29.809(f), the stowage provisions for these devices must be located at the exits where they are intended to be used.

(4) Life raft stowage provisions should be sufficient to accommodate rafts for the maximum number of occupants for which certification for ditching is requested.

(i) Life rafts stowed inside the rotorcraft should be located near the ditching emergency exits so that:

(A) Life rafts are readily accessible and deployment through ditching emergency exits by passengers and crew may be accomplished without unreasonable effort and training.

(B) Deployment of life rafts can be accomplished without damage (i.e., punctures, tears, etc.).

(ii) Life rafts stowed outside of the rotorcraft should have--

(A) A readily accessible deployment device; and

(B) A secondary method of deployment near the stowed area.

(iii) Rotorcraft fuselage attachments for the life raft static lines required by § 29.1415(b)(2) must be provided.

(A) Static line fuselage attachments should not be susceptible to damage when the rotorcraft is subjected to the maximum emergency ditching water entry loads established by § 29.801. (See paragraph AC 29.801b(1).)

(B) Static line fuselage attachments should be structurally adequate to restrain a fully loaded raft of the maximum capacity required for ditching certification.

(C) Life rafts that are remotely or automatically deployed must be attached to the rotorcraft by the required static line after deployment without further action from the crew or passengers.

(5) Stowage provisions for the emergency locator transmitter (ELT) required by § 29.1415 must be located near a designated ditching emergency exit. The TSO under which most life rafts are approved and the operating regulations (e.g., 135.167(b)) require that the ELT be actually attached to an approved life raft. Configurations supplying an ELT as a part of an approved life raft package have been accepted as meeting the intent of § 29.1411(e).

(6) If stowage provisions for life preservers are included in an interior configuration, each life preserver when stowed must be within easy reach of each occupant while seated.

AC 29.1413. <u>§ 29.1413 (Amendment 29-16) SAFETY BELTS: PASSENGER WARNING DEVICE</u>.

a. <u>Explanation</u>. A safety belt design feature and a design feature for the belt warning or signal device are stated in the standard.

(1) Belts must have metal-to-metal latches (Amendment 29-16). Section 29.785(c), (f), and (g) of Amendment 29-24 concern design and installation standards for belts.

(2) Whenever a “fasten” seat belt sign or equivalent symbol is used, each pilot shall be able to control or operate the sign.

(3) Section 29.853(c) of Amendment 29-18 concerns illuminated “no smoking” information signs which are typically adjacent to any seat belt information sign. Whenever the crew and passenger compartments are separated, illuminated signs are required. However, a placard may be used to prohibit any smoking.

(4) TSO-C22, Safety Belts, contains acceptable aircraft belt standards. Also, TSO-C114, Torso Restraint Systems, dated March 27, 1987, contains acceptable aircraft standards, provided there is compliance with § 29.785.

b. <u>Procedures</u>.

(1) A TSO-C22 or TSO-C114 approved seat belt or seat belt/harness should be used. The rated load shall not be exceeded. During an interior compliance inspection, the belt shall be checked for proper label, rating, and metal-to-metal latches. Other features are required by § 29.785(c) and (g) of Amendment 29-24.

(2) A placard, legible to each passenger seated in the cabin, stating “fasten seat belts” (and harness if appropriate) may be used. This is similar to the “no smoking” placard standard.

(3) If an illuminated “fasten seat belt” sign or symbol is used, it should be legible to each seated passenger and must be controllable from each pilot seat.

AC 29.1415. § 29.1415 (Amendment 29-30) DITCHING EQUIPMENT.

a. Explanation.

(1) Emergency flotation and signaling equipment is not required for all rotorcraft overwater operations. However, if such equipment is required by an operating rule (e.g., § 135.167), the equipment supplied for compliance with the operating rule must meet the requirements of this section.

(2) Compliance with the provisions of § 29.801 for rotorcraft ditching requires compliance with the safety equipment stowage requirements and ditching equipment requirements of §§ 29.1411 and 29.1415, respectively.

(i) Emergency flotation and signaling equipment installed to complete certification for ditching or required by any operating rule must be compatible with the basic rotorcraft configuration presented for ditching certification. It is satisfactory if operating equipment is not incorporated at the time of original type certification of the rotorcraft provided suitable information is included in the “Limitations” section of the Rotorcraft Flight Manual to identify the extent of ditching certification not yet completed.

(ii) When the ditching equipment required by § 29.1415 is being installed by a person other than the applicant who provided the rotorcraft flotation system and ditching emergency exits, special care must be taken to avoid degrading the functioning of the aircraft devices and to make the ditching equipment compatible with them. (See paragraphs AC 29.801a(9) and AC 29.1411a(2).)

b. Procedures.

(1) Life rafts and life preservers used to show compliance with the ditching requirements must be of an approved type. Compliance with the requirements of TSO-C12 for life rafts and TSO-C13 for life preservers will satisfy regulatory requirements for approval of this equipment.

(i) Life preservers.

(A) Life preservers should comply with the requirements of the applicable operating regulations (FAR Parts 91, 135, 121, etc.). For extended overwater operations each life preserver is required to have an approved survivor locator light by the operating rules.

(B) Protective covers for life preservers should be compatible with the TSO requirements under which the basic life preserver was approved.

(ii) Life rafts.

(A) Life rafts are rated during their approval to the number of people that can be carried under normal conditions and the number that can be accommodated in an overload condition. Only the normal rating may be used in relationship to the number of occupants permitted to fly in the rotorcraft.

(B) The life raft configuration (i.e., number of life rafts and capacity of each raft) presented for ditching certification must be adequate to accommodate all rotorcraft occupants using the overload rating of the remaining raft(s) after the loss of one raft of the largest rated capacity. Thus, at least two rafts are required for any transport category rotorcraft extended overwater operation.

(C) Each life raft must be equipped with both a trailing line and a static line to be used for securing the life raft close to the rotorcraft for occupant egress. The static line should be of adequate strength to restrain the life raft under any reasonably probable sea state condition but must be designed to release before submerging the empty raft to which it is attached if the rotorcraft sinks.

(iii) Survival Equipment. Approved survival equipment if required by any operating rule must be attached to each life raft. Provisions for the attachment and stowage of the appropriate survival equipment should be addressed during the ditching equipment segment of the basic ditching certification.

(2) One emergency locator transmitter (ELT) meeting the applicable requirements of TSO-C91 must be provided for use in one life raft. The ELT provided for this purpose should be attached to one of the rafts or included in the survival equipment which is attached to one of the life rafts. If not attached to a life raft, the ELT must be located near an emergency ditching exit for compliance with § 29.1411(e). (See paragraph AC 29.1411b(5).)

AC 29.1419. § 29.1419 (Amendment 29-21) ICE PROTECTION.

NOTE: Section 29.877 was removed and replaced by § 29.1419 in Amendment 29-21. Guidance material for Ice Protection prior to Amendment 29-21 is retained in AC paragraph 29.877 (Subpart D).

a. Background.

(1) In March 1984, the FAA/AUTHORITY for the first time certificated a rotorcraft for flight into known icing conditions. Several other manufacturers are pursuing designs for icing flight capability.

(2) Most rotorcraft icing technology has been developed for military rotorcraft. The only U.S. military rotorcraft equipped and approved for flight into icing conditions is the UH-60A (Blackhawk). The UH-60A is limited to supercooled cloud conditions where liquid water content (LWC) does not exceed 1.0°gm/m^3 and outside air temperature (OAT) is not below -20° C.

(3) Many rotorcraft operators have voiced a high priority on obtaining rotorcraft approved for operation in icing conditions.

(4) The icing characteristics envelope of FAR Part 25, Appendix C, has served as a satisfactory design criteria for fixed-wing operations for two decades. The envelope, as presented, extends to 22,000 feet with possible extension to 30,000 feet but does not present icing severity as a function of altitude. At the time the envelope was derived, it was assumed that all transport category airplanes would operate to at least 22,000 feet. For present state-of-the-art rotorcraft, this assumption is not valid. As such, an altitude-limited icing envelope based on the same data used to derive the Part 25, Appendix C, and the Part 29, Appendix C, envelopes is presented as an alternate to the full icing envelope.

b. Explanation.

(1) General.

(i) The discussion in this paragraph pertains generally to certifications to the full icing envelope of Part 29, Appendix C, within the altitude limitations of the rotorcraft or to the altitude-limited icing envelope based on a 10,000-foot pressure altitude limit. The actual icing envelope considered may be further restricted based on the actual pressure altitude envelope for which certification is requested. It envisions certification with full ice protection systems (rotor blades, windshields, engine inlets, stabilizer surfaces, etc.). With the exception of pilot controllable variables such as altitude and airspeed, limited certification (either in terms of icing envelope or protection capability) is not envisaged at this time due to the difficulty in forecasting the severity of icing conditions, relating the effects of the forecasted conditions to the type of aircraft, and the effects of reported icing among various types of aircraft, particularly between fixed- and rotary-wing aircraft. In addition, with a limited protection capability, viable escape options may not be operationally available if limitations are exceeded.

(ii) The discussion in this paragraph, regarding rotor blade ice protection, is oriented primarily toward electrothermal rotor deicing systems, since these have the most widespread acceptance and projected use within the industry. Also, most of the testing and research into rotorcraft ice protection to date has been conducted with these types of systems. Research is continuing with other types of systems such as anti-icing fluid systems, and information will be added to address certification of these as necessary. It should also be noted that most of the rotorcraft icing experience accumulated to date has been on rotorcraft with symmetrical airfoil sections. The

application of this experience to rotorcraft with asymmetrical airfoils should be carefully evaluated. Limited experience has been gained during development and qualification testing of the Army Blackhawk on asymmetrical airfoil icing characteristics. The most prominent difference appears to be a more rapid degradation of airfoil performance. Rapidity of performance degradation is also dependent upon severity of the icing condition (primarily a function of liquid water content) and ice shape (primarily a function of OAT and median volumetric droplet diameter (MVD)).

(iii) The effects of ice can vary considerably from rotorcraft to rotorcraft. Experience gained for a rotor system with an identical blade profile could provide valuable information but should be used cautiously when applied to another rotorcraft. Assumptions cannot necessarily be made based on icing test results from another rotorcraft. Particular care should be exercised when drawing from fixed-wing icing experience as the widely different and varying conditions seen by the rotor blades make many comparisons with fixed-wing results invalid. Likewise, icing effects on rotor blades vary significantly from those on other parts of the rotorcraft. This is due to changing blade velocity as compared with the constant velocity of the remaining parts.

(2) Reference Material. Prior to commencement of efforts to design and certify a rotorcraft, the references listed in paragraph d should be reviewed. FAA Technical Report ADS-4, Engineering Summary of Airframe Icing Technical Data, December 1963, although somewhat dated, is recommended for basic aircraft icing protection system design information.

(3) Objective. The objective of icing certification is to verify that throughout the approved envelope, the rotorcraft can operate safely in icing conditions expected to be encountered in service (i.e., Appendix C of Part 29 or the altitude-limited icing envelope presented herein). This will entail determining that no icing limitations exist or defining what the limitations are, as well as establishing the adequacy of the ice warning means (or system) and the ice protection system. A limiting condition may manifest itself in one of several areas such as handling qualities, performance, autorotation, asymmetric shedding from the rotors, visibility through the windshield, etc. Prior to flight tests in icing conditions, sufficient analyses should have been conducted to determine the design points for the particular item of the rotorcraft being analyzed (windshield, engine inlet, rotor blades, etc.). After the analyses are reviewed and found adequate, tests should be conducted to confirm that the analyses are valid and that the rotorcraft can operate safely in any supercooled cloud icing condition defined by Part 29, Appendix C, or the altitude-limited icing envelope. References d(1) and (3) may be useful in determining the design points and extrapolation of test data to the desired design points.

(4) Planning. For best utilization of both the applicant's and the FAA/AUTHORITY's resources, the applicant should submit a certification plan at the start of the design and development effort. The certification plan should describe all efforts intended to lead to certification and should include the following basic information:

Rotorcraft and systems description.
Ice protection systems description.
Certification checklist.
Description of analyses or tests planned to demonstrate compliance.
Projected schedules of design, analyses, testing, and reporting efforts.
Methods of test - artificial vs. natural.
Methods of control of variables.
Data acquisition instrumentation.
Data reduction procedures.

(5) Environment.

(i) Definitions.

(A) Supercooled Clouds. Clouds containing water droplets (below 32° F) that have remained in the liquid state. Supercooled water droplets will freeze upon impact with another object. Water droplets have been observed in the liquid state at ambient temperatures as low as -60° F. The rate of ice accretion on an aircraft component is dependent upon many factors such as droplet size, cloud liquid water content, ambient temperature, and component size, shape, and velocity.

(B) Ice Crystal Clouds. Glaciated clouds existing usually at very cold temperatures where moisture has frozen to the solid or crystal state.

(C) Mixed Conditions. Partially glaciated clouds at ambient temperatures below 32° F containing a mixture of ice crystals and supercooled water droplets.

(D) Freezing Rain and Freezing Drizzle. Precipitation existing within clouds or below clouds at ambient temperatures below 32° F where rain droplets remain in the supercooled liquid state.

(E) Sleet. Precipitation of transparent or translucent pellets of ice which have a diameter of 5mm or less.

(F) Hail. Solid precipitation in the form of balls or pieces of ice (hailstones) with diameters ranging from 5mm to more than 50mm.

(ii) Appendix C of Part 29 defines the supercooled cloud environment necessary for certification of rotorcraft in icing except that the pressure altitude limitation is that of the rotorcraft or that selected by the applicant, provided the remaining altitude envelope is operationally practical. Due to air traffic system compatibility constraints, approval of a maximum altitude less than 10,000 feet pressure altitude should be discouraged. However, there are operations where a lower maximum altitude has no effect on the air traffic system and would still be operationally useful. Figures 3 and 6 of Appendix C, Part 29, relate the variation of average LWC as

a function of cloud horizontal extent. These relationships should be used for design assessment of the most critical combinations of conditions as a function of en route distance. This, in combination with a capability to hold in icing conditions for 30 minutes at the destination, is commensurate with policies previously established for fixed-wing aircraft. Figures 3 and 6 should be used in conjunction with the altitude-limited criteria of figures AC 29.1419-1 through -4 herein. It is emphasized that LWC extremes expressed in Part 29 Appendix C, criteria represent the maximum average values to be anticipated within an exceedance probability of 99.9 percent. Transient, instantaneous peak values of much higher LWC have been observed. These instantaneous peak values appear to be of little significance to the design of protected and unprotected surfaces; however, these high values, if encountered, may induce shedding of ice from some unprotected surfaces. This is due to radical changes in the rate of release of latent heat and resultant changes in the structural properties and adhesion force of ice.

(iii) An analysis performed at the FAA Technical Center in 1985 concludes that the aircraft icing environment below 10,000 feet is not as severe in terms of LWC and OAT as that depicted in the Part 29, Appendix C, envelope. This AC presents the altitude-limited envelope that may be employed by those applicants who elect to certify with a 10,000-foot pressure altitude limit. The altitude-limited envelope is based upon the same data that were used to derive the design criteria of Part 29, Appendix C (figures AC 29.1419-1 through -4). The data used to derive these limited envelopes cannot be used to further define icing conditions between 10,000 feet and 22,000 feet; hence, above 10,000 feet, the Part 29, Appendix C, envelopes should be used. It should be noted that the engine inlets should still meet the icing requirements of § 29.1093. The limited icing envelopes may be used on an equivalent safety basis to show compliance with the intent of § 29.1093 if the altitude limit established for the rotorcraft is not greater than 10,000 feet.

(iv) Significantly different effects can result from various combinations of parameters. For example, most rapid ice accumulations occur at the high values of liquid water content, although the greatest impingement area occurs at the high values of droplet size. Most critical ice shapes are a function of each of these parameters in addition to airspeed, surface temperature, and surface contour. Care should be taken to explore the entire specified ranges of these parameters during the design, development, and certification efforts.

(v) Mixed conditions (i.e., a combination of ice crystals and supercooled water droplets) and freezing rain or freezing drizzle are not addressed in the Part 29 environmental criteria but can present more severe icing conditions than those defined. Although the probability of encountering freezing rain is relatively low, mixed conditions commonly occur in supercooled cloud formations. Little data have been gathered on the effects of encountering mixed conditions (see paragraph AC 29.1419d(6)). There are no criteria for certification in mixed conditions or freezing rain at present. In addition to the hazards of operating any aircraft in icing, certain aspects of rotorcraft icing (relatively low altitude operation, asymmetric shedding with resulting vibration, and ice

damage or ingestion) warrant a caution notice in the RFM advising that the rotorcraft is not certified for operation in freezing rain or freezing drizzle. Avoidance procedures (e.g., climb or descent) may also be useful.

(6) Flight Test Prerequisites.

(i) The prototype rotorcraft should be capable of IFR and IMC flight.

(ii) Sufficient analyses should be developed, submitted, and accepted by FAA/AUTHORITY to show that the rotorcraft is capable of safely operating to the selected design points of both the continuous maximum and intermittent maximum conditions of Part 29, Appendix C, or the altitude-limited icing envelope. A detailed failure modes and effects analysis (FMEA) of the ice protection system should be performed.

(iii) Specific attention should be given to (1) assuring that the selected design condition(s) of atmospheric and rotorcraft flight envelopes have been identified; (2) qualification and design of ice protection systems and components; and (3) component installation and ice formation effects upon basic rotorcraft structural properties and handling qualities. These assurances can be established from analyses, bench tests, and/or dry air flight tests or simulated icing tests, as appropriate, prior to flight tests in natural icing.

(iv) The applicant should assess rotor blade stability with ice deposits to assure that dynamic instability will not occur in icing conditions. This assessment may be accomplished by analysis including consideration of failure of the most critical segment of the rotor blade ice protection system. It also may be accomplished by experimental means such as attaching dummy ice shapes to the blades and using a whirl stand or wind tunnel.

c. Procedures.

(1) Compliance.

(i) In general, compliance can be established when there is reasonable assurance that while operating in the specified icing environment (1) the engine(s) will not flameout or experience significant power losses or damage; (2) stress levels are not reached with ice accumulations that can endanger the rotorcraft or cause serious reductions in component life; (3) the handling qualities, performance, visibility, and systems operation are defined and are not deteriorated unacceptably; (4) inlet, vent, or drain blockage (such as fuel vent, engine, or transmission cooler) is not excessive; and (5) autorotation characteristics are acceptable with maximum ice accretion between de-ice cycles. Assessment of performance loss should include not only the drag and weight of the ice itself but electrical or other load demands of the ice protection system and any performance changes resulting from modified rotor blade contours.

(ii) It is emphasized that ice formations (shape, weight, etc.) vary significantly under varying conditions of OAT, LWC, MVD, airspeed, attitude, and rotor RPM. The most critical conditions should be defined by means of analyses or test and verified by test. Performance changes under these various conditions should be determined and found acceptable.

(iii) Laboratory, icing tunnel, ground spray rig, and airborne icing tanker tests are all very useful in developing an ice protection capability, but none of these, either individually or collectively, can satisfy the full requirements for certification. None can presently duplicate the combinations of liquid water content, droplet size, flow field, and random shedding patterns found in natural icing conditions. Airborne tankers hold considerable promise of being able to fulfill certification requirements (in addition to the advantage of being able to produce an icing environment on demand rather than having to wait for it to occur in nature), but tankers have not been able to generate droplet sizes that cover the complete envelope for certification. Many improvements have been made in some tankers in recent years; however, large droplet sizes have typically been a problem. Also, the size of existing tanker clouds is not of sufficient cross section to immerse the entire rotorcraft. There are also solar radiation and relative humidity effects to be considered and correlated with natural icing when using a tanker. The tanker should be able to immerse the entire rotor system as a minimum and should have a means of controlling and changing the cloud characteristics uniformly and repeatably. Until an artificial method has been successfully demonstrated and accepted, icing certification should include flight tests in natural icing conditions.

(iv) Flight testing in natural icing conditions also has limitations. Paragraph AC 29.1419d(16) contains information that may be useful in planning natural icing flight tests. The key limitation of natural icing flight tests is being able to find the combinations of conditions that comprise critical design points. This is especially true of those points falling near the 99.9 percentile of exceedance probability; e.g., high LWC at low OAT with large MVD. It is emphasized that some more severe design points, however, may exist within the atmospheric icing envelope rather than near the edges or corners of the envelope. This does not mean that natural icing tests must be conducted at all the selected design conditions. Natural icing tests should be conducted in conditions as close to design points as possible and sufficient correlation shown with the analyses to assure that the rotorcraft can operate safely throughout the design envelope.

(v) Certification flight testing should be extensive enough to provide reasonable assurance that either induced or random ice shedding does not present a problem. The most likely indication of a problem if it exists will be ice impact on the airframe or rotor imbalance resulting in vibration. The following should be considered sufficient for rejection:

(A) Vibrations sufficient to make the instruments difficult to read accurately.

(B) Vibrations sufficient to exceed the structural or fatigue limits of any rotorcraft part such as blade, mast, or transmission components.

(C) Ice impact damage to essential parts, such as the tail rotor, that could create a flight hazard. Cosmetic, nonstructure flaws that do not exceed wear and tear characteristics or maintenance criteria are acceptable. Any ice shedding effects that require immediate maintenance action are unacceptable.

(vi) There should be a means identified or provided for determining the formation of ice on critical parts of the rotorcraft which can be met by a reliable and safe natural warning or an ice detection system. A system utilizing OAT must include an accurate OAT measurement since the onset of icing can occur in a very narrow temperature band requiring sensitive and accurate OAT measurement. OAT accuracy should be relative to the true temperature of the air mass. Total system accuracy should be ±0.5° C in the -5.0° to +5.0° C range and ±1° C throughout the remaining temperature range. The location of the sensor has been shown to be very critical and, in effect, there can be a position error or other errors induced by ice formations or solar radiation. If the system measures liquid water content, consideration should be given to the fact that the actual LWC fluctuates considerably as the rotorcraft passes through an icing environment. A warning system displaying or utilizing a peak or average LWC value (rather than an instantaneous readout) should include sufficient conservatism to provide a margin of safety. The value of an LWC detecting system lies in its utility as a warning that ice is being encountered. The actual magnitude of LWC in combination with OAT and MVD can be used to indicate the icing severity level. The U.S. Army is currently developing an advanced ice detection system for potential application to rotorcraft.

(2) Instrumentation and Data Collection.

(i) Instrumentation proposed for certification tests, including flight strain surveys, should be reviewed as early as possible in the program to establish that it will provide the necessary data. The need for accurate OAT measurement previously noted for operation in icing also applies to the certificated configuration. Mechanical devices such as the rotating multicylinder and rotating disc have been used for measuring the ice accretion rate which is related by calibration to average LWC and MVD. More recently, hybrid mechanical/electronic LWC measuring devices have been used. Devices that rely on ice accretion as a signal source are subject to the Ludlam limit (the limits whereby latent heat of fusion is not totally absorbed, thus resulting in incomplete freezing of the moisture and some inaccuracy in the indication). The Ludlam limit is a function of various parameters including OAT, airspeed, LWC, and MVD. The Ludlam limit may vary from one device to another. (See paragraphs AC 29.1419d(8) and d(9)(i) for further information). Gelatin slides, soot and oil slides, and more recently, laser nephelometers have been used to measure droplet size. Other calibrated devices intended for measurement of LWC should be used. Paragraph AC 29.1419d(16) describes several of these devices. Photographic coverage of critical areas may be necessary to ascertain that ice protection systems are

functioning properly and that there are no runback problems. (The term “runback” refers to liquid water that has not been evaporated by surface de-ice equipment and flows back to an unheated area subject to freezing.) Paragraph AC 29.1419d(19) highlights use of video techniques and equipment for this purpose. Some systems will require acceptable calibration techniques and data.

(ii) Gelatin, soot, and oil slides provide data that can be used to estimate MVD at discrete intervals while laser nephelometer data can provide time histories of MVD droplet size distributions. Gelatin slide data should be taken frequently during test flights to properly characterize the cloud. Laser nephelometer data have been found to be highly dependent upon knowledge of the equipment and calibration. Proper calibration, maintenance, and data processing techniques should be utilized and demonstrated. Additional information on the subject may be found in paragraph AC 29.1419d(18).

(iii) Structural instrumentation requirements should also be established as early as possible in the program. Flight strain measurements are strongly recommended in assessing the ice imposed stress on the rotorcraft. The flight strain measurements should determine the effect on fatigue life due to ice accumulation for such items as main rotor blades, main rotor hub components, rotating and fixed controls, horizontal stabilizer, tail rotor, etc. The subsequent proper operation of retractable devices such as landing gear should be demonstrated with representative ice accretion. In addition, the static and fatigue strength of the blade with heater mat must be substantiated. Any effect of the heater mat on fatigue strength of the blades must be considered.

(3) Additional Considerations. The following are items to consider in an icing certification program. They are not intended to be all-inclusive, and the possibility of widely differing characteristics and critical areas among various rotorcraft in icing should be considered.

(i) The rotorcraft should be shown by analysis and confirmed by either simulated or natural icing tests to be capable of holding for 30 minutes in the design conditions of the continuous maximum icing envelope at the most critical weight, CG, and altitude with a fully functional ice protection system.

(ii) A single ice protection system and power source may be considered acceptable provided that after any single failure of the ice protection system, the rotorcraft can be shown by analysis and/or test to be capable of safe operation (no hazard) for 15 minutes following failure recognition in the continuous icing envelope used as the basis for certification within the same icing limits used for the 30-minute hold criteria. During this 15-minute period the rotorcraft may exhibit degraded characteristics. Pilot controllable operating limitations such as airspeed may be used to satisfy this continued safe flight criteria. For purposes of determining performance and handling qualities degradation, ice protection system failure need not be considered to

occur simultaneously with engine failure unless ice protection system operation is dependent upon engine operation.

(iii) Although current airborne weather radar technology systems may be useful in avoiding potential icing conditions by detecting precipitation, the use of weather radar is not an FAA/AUTHORITY requirement for icing certification.

(iv) If the ice protection is not operating continuously, there must be a means to advise the crew when the rotorcraft is in icing conditions in order that the system may be activated.

(v) No autorotational performance data is required for rotorcraft which have Category A powerplant installations. All rotorcraft certified for flight in icing conditions must be capable of full autorotational landings with the ice protection system operating. Autorotational entry, steady state, and flare entry flying qualities and performance should be evaluated with an ice load. Since the Category A en route performance can vary as the ice protection system operates, a mean value of cyclic torque is acceptable provided, at no time, the rate of climb falls below zero. The rotorcraft is assumed to be clear prior to takeoff, and, therefore, the takeoff performance is not degraded. The landing performance can be based on the in-flight assessment of overall performance degradation. Items such as fuel burns can be used as part of the in-flight performance degradation determination. Regardless of the methods used to determine performance degradation, they must be easily used by the crew. The hover performance should be addressed for the termination of a flight after an icing encounter. The engines must be protected from the adverse effects of ice. When ice does accumulate on the inlets, screens, etc., it must be accounted for in performance, engine operating characteristics, and inlet distortion.

(vi) The handling qualities of the rotorcraft must be substantiated if ice can accumulate on any surface. When ice can accumulate on unprotected surfaces, the rotorcraft must exhibit satisfactory VFR/IFR handling qualities. In addition, following the failure of the de-ice system, the rotorcraft must be safely controllable for 15 minutes, i.e., the rotorcraft must be free from excessive and rapid divergence. Artificial ice shapes may be acceptable for acquisition of flight test data necessary for handling qualities and performance evaluations and demonstrations.

(vii) Items such as fuel tank vents, cooling vents, antennas, etc., must be substantiated for maximum icing effects.

(viii) The ice protection system should be sufficiently reliable to perform its intended function in accordance with the requirements of § 29.1309. These requirements may in some instances be met by the use of sound engineering judgment during design and compliance demonstrations. In many instances, use of good design practices, failure modes and effects analysis, and similarity analyses combined with good judgment will be adequate. In some instances the need for reliability analyses

may be desirable. Additional information pertaining to reliability is contained in paragraph AC 29.1309 (§ 29.1309).

(ix) The subject of lightning must be addressed. The criteria applied on rotorcraft with ice protection systems are that "the rotorcraft must be protected in such a manner to minimize lightning risk." The general rules of § 29.1309(a), (b), and (c) are applicable to ensure adequate lightning protection.

(x) Ice protection of pitot-static sources, windshields, inlets, exposed control linkages, etc., must be considered.

(xi) The impact of ice protection system failure, complete and partial, and achieving adequate warning thereof must be assessed.

(xii) The impact of delayed application of ice protection systems should be assessed. Hazardous conditions should not be apparent. Any rotorcraft characteristic changes resulting should be covered in cautionary material in the rotorcraft flight manual.

(xiii) Possible droop stop malfunction with ice accumulation and its potential hazard to the rotorcraft, its occupants, and ground personnel must be assessed.

(xiv) Possible ice shedding hazards to ground personnel or equipment in proximity to turning rotors following flight in icing conditions should be given much consideration.

(4) Flight Manual. Areas of the flight manual which may require input are:

(i) Operating limitations including approved types of operation and prohibiting operation in freezing rain or freezing drizzle conditions. Avoidance procedures may also be useful.

(ii) Normal Operating Procedures. Information on the ice detection means or system and ice protection system and their capabilities.

(iii) Emergency Operating Procedures. Operating procedures containing essential information particularly with system failure.

(iv) Caution Notes. These caution notes should advise or address:

(A) Against inducing asymmetric shedding with rapid control inputs or rotor speed changes, except possibly as a last resort. Rotor speed changes appear to be more effective than control inputs in removing ice from the rotor blades of some rotorcraft.

(B) Loss in range, climb rate, and hover capability following prolonged operation in icing.

(C) The need for clean blade surfaces and use of approved cleaning solvents or ground deicing/anti-icing agents prior to start of rotors turning.

(D) Changes in autorotational characteristics resulting from formations.

(E) If the rotorcraft has been certificated for flight in supercooled clouds and falling and blowing snow, flight in other conditions such as freezing rain, freezing drizzle, sleet, hail, and combinations of these conditions with supercooled clouds should be avoided.

(F) The potential hazards to ground personnel, passengers deplaning, and equipment in proximity to turning rotors following flight in icing conditions.

d. Icing References.

(1) FAA Technical Report ADS-4, Engineering Summary of Airframe Icing Technical Data, December 1963.

(2) Advisory Circular 20-73, Aircraft Ice Protection, April 21, 1971.

(3) Advisory Circular 91-51, Airplane De-ice and Anti-ice Systems, September 15, 1977.

(4) FAA Report RD-77-76, Engineering Summary of Powerplant Icing Technical Data, July 1977.

(5) United States Army Aviation Engineering Flight Activity Reports:

(i) Natural Icing Tests, UH-1H Helicopter, Final Report, June 1974, USAASTA Project No. 74-31.

(ii) Artificial Icing Tests, UH-1H Helicopter, Part 1, Final Report, January 1974, USAASTA Project No. 73-04-4.

(iii) Artificial Icing Tests, UH-1H Helicopter, Part II, Heated Glass Windshield, Final Report, USAASTA Project No. 73-04-4.

(iv) Artificial Icing Tests, Lockheed Advanced Ice Protection System Installed on a UH-1H Helicopter, Final Report, June 1975, USAAEFA Project No. 74-13.

(v) Artificial and Natural Icing Tests for Qualification of the UH-1H, Kit A Aircraft, Letter Report, USAAEFA Project No. 78-21-1.

(vi) Microphysical Properties of Artificial and Natural Clouds and Their Effects on UH-1H Helicopter Icing, Report USAAEFA Project No. 78-21-2.

(vii) Helicopter Icing Spray System (HISS) Nozzle Improvement Evaluation, Final Report, September 1981, USAAEFA Project No. 79-002-2.

(viii) Artificial and Natural Icing Tests of the YCH-4TD, Final Report, May 1981, USAAEFA Project No. 79-07.

(ix) Limited Artificial Icing Tests of the OV-ID, Letter Report, July 1981, USAAEFA Project No. 80-16, and (Limited Distribution).

(x) JUH-IH Ice Phobic Coating Tests, Final Report, July 1980, USAAEFA Project No. 79-02.

(xi) Artificial and Natural Icing Tests, Production UH-60A Helicopter, Final Report, June 1980, USAAEFA Project No. 79-19.

(xii) Helicopter Icing Spray System (HISS) Evaluation and Improvements, Letter Report, June 1981, USAAEFA Project No. 80-04.

(xiii) Artificial Icing Test of CH-47C Helicopter with Fiberglass Rotor Blades, Final Report, July 1979, USAAEFA Project No. 78-18.

(xiv) Limited Artificial and Natural Icing Tests, Production UH-60A Helicopter (Reevaluation), Final Report, August 1981, USAAEFA Project No. 80-14.

(6) Further Icing Experiments on an Unheated Nonrotating Cylinder, National Research Council, Canada Report LTR-LT-105, dated November 1979, by J.R. Stallabrass and P.F. Hearty.

(7) Ludlam, F.H., Heat Economy of a Rimed Cylinder, Quarterly Journal, Royal Meteorological Society, Vol. 77, 1951.

(8) U.S. Army AMRDL Reports:

(i) USAAMRDL TR 73-38, Ice Protection Investigation For Advanced Rotary Wing Aircraft, J.B. Werner, August 1973, AD 7711182.

(ii) Werner, J.B., The Development of an Advanced Anti-Icing/Deicing Capability for U.S. Army Helicopters, Volume 1, Design Criteria and Technology Considerations, USAAMRDL - TR-75-34A, Eustis Directorate, U.S. Army Air Mobility R&D Laboratory, November 1975, AD A019044.

(iii) Werner, J.B., The Development of an Advanced Anti-Icing/Deicing Capability for U.S. Army Helicopters, Volume 2, Ice Protection System Application to

the UH-1H Helicopter, USAAMRDL - TR-75-34B, Eustis Directorate, U.S. Army Air Mobility Research and Development Laboratory, November 1975, AD A019049.

(iv) USAAMRDL-TR-76-32, Ottawa Spray Rig Tests of an Ice Protection System Applied to the UH-1H Helicopter, November 1976, AD A0034458.

(v) USARTL-TR-78-48, Icing Tests of a UH-1H Helicopter with an Electrothermal Ice Protection System Under Simulated and Natural Icing Conditions, April 1979.

(vi) USAAMRDL-TR77-36, Final Report, Natural Icing Flights and Additional Simulated Icing Tests of a UH-IH Helicopter Incorporating an Electrothermal Ice Protection System, July 1978, AD A059704.

(9) Technical Feasibility Test of Ice Phobic Coatings for Rain Erosion in Simulated Flight Conditions, U.S. Army Test and Evaluation Command, Final Report, 4-AI-192-IPS-001, August 1980.

(10) Technical Feasibility Test of Ice Phobic Coatings in Simulated Icing Flight Conditions, U.S. Army TECOM, Final Report, 4-CO-160-000-048, September 1980.

(11) Aircraft Icing, NASA Conference Publication 2086, FAA-RD-78-109, July 1978.

(12) Helicopter Icing Review, FAA Technical Center, Final Report, FAA-CT-80-210, September 1980.

(13) National Icing Facilities Requirements Investigation, Final Report, FAA Technical Center, FAA-CT-81-35, March 1981.

(14) Aircraft Icing, AGARD Advisory Report No. 127, November 1978.

(15) Rotorcraft Icing - Review and Prospects, AGARD Advisory Report, AR-166, September 1981.

(16) Advisory Circular 20-117, Hazards Following Ground Deicing and Ground Operations in Conditions Conducive to Aircraft Icing, December 17, 1982.

(17) Olson, W., Experimental Comparison of Icing Cloud Instruments, January 1983, NASA TM 83340.

(18) JUH-1H Redesigned Pneumatic Boot Deicing System Flight Test Evaluation. Hayworth, L., Graham, M., August 1987. USAAEFA Edwards AFB, California. Project No. 83-13.

(19) An Appraisal of the Single Rotating Cylinder Method of Liquid Water Content Measurement, National Research Council Canada Report LTR-LT-92, dated November 1978, by J.R. Stallabrass.

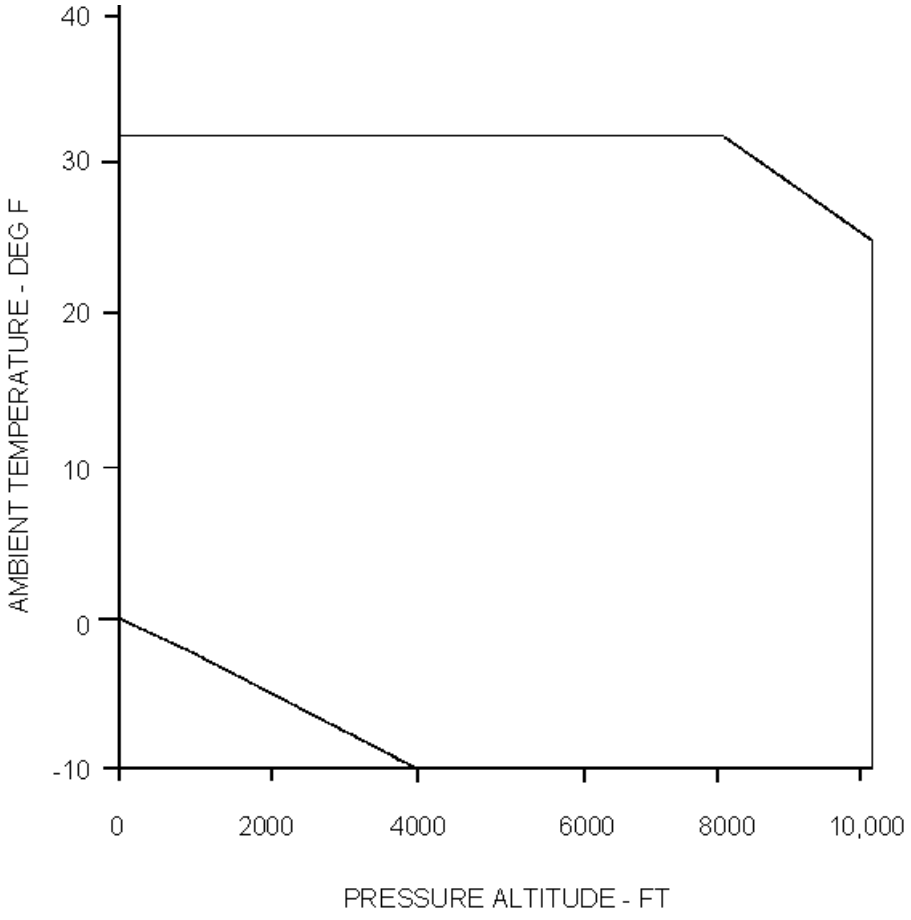

FIGURE AC 29.1419-1 CONTINUOUS ICING - TEMPERATURE VS ALTITUDE LIMITS

Figures AC 29.1419 -1 through 4 represent the approach to a 10,000-foot altitude limit. See Paragraph b(5)(iii) for a discussion of this approach.

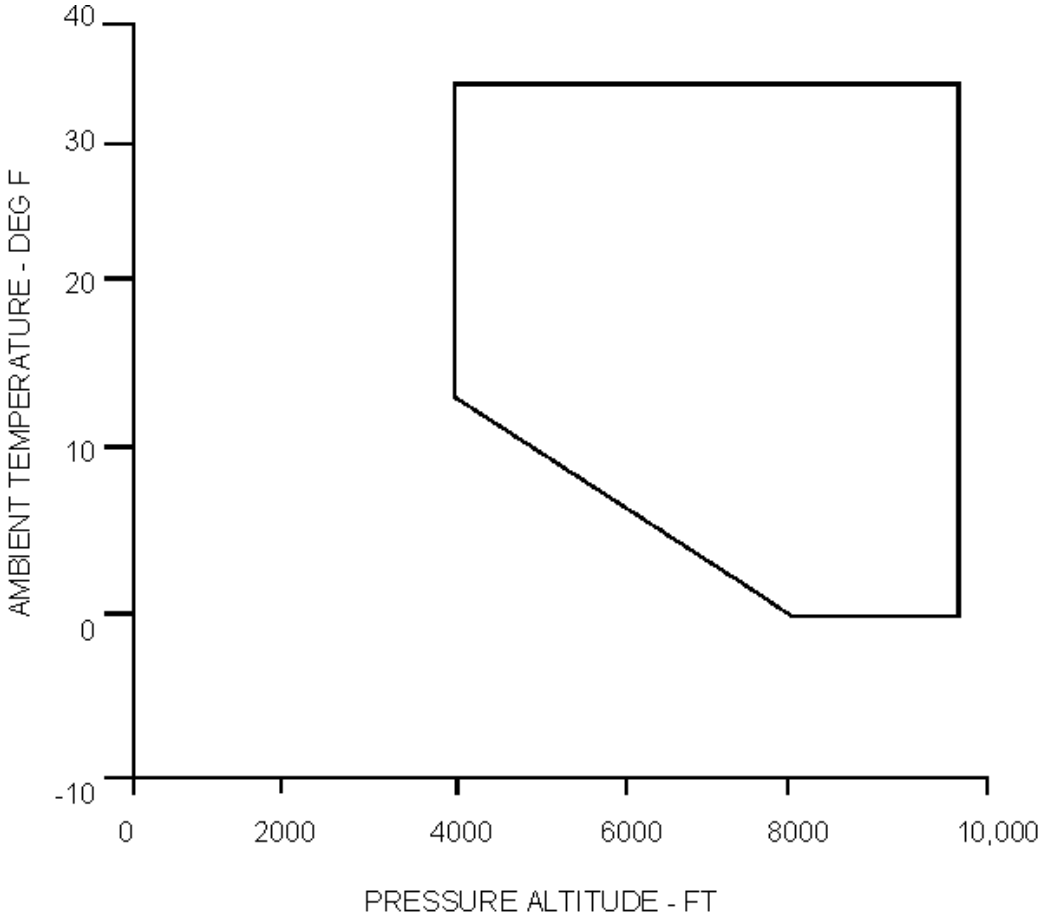

FIGURE AC 29.1419-2 INTERMITTENT ICING - TEMPERATURE VS ALTITUDE LIMITS

Figures AC 29.1419-1 through 4 represent the approach to a 10,000-foot altitude limit. See Paragraph b(5)(iii) for a discussion on this approach.

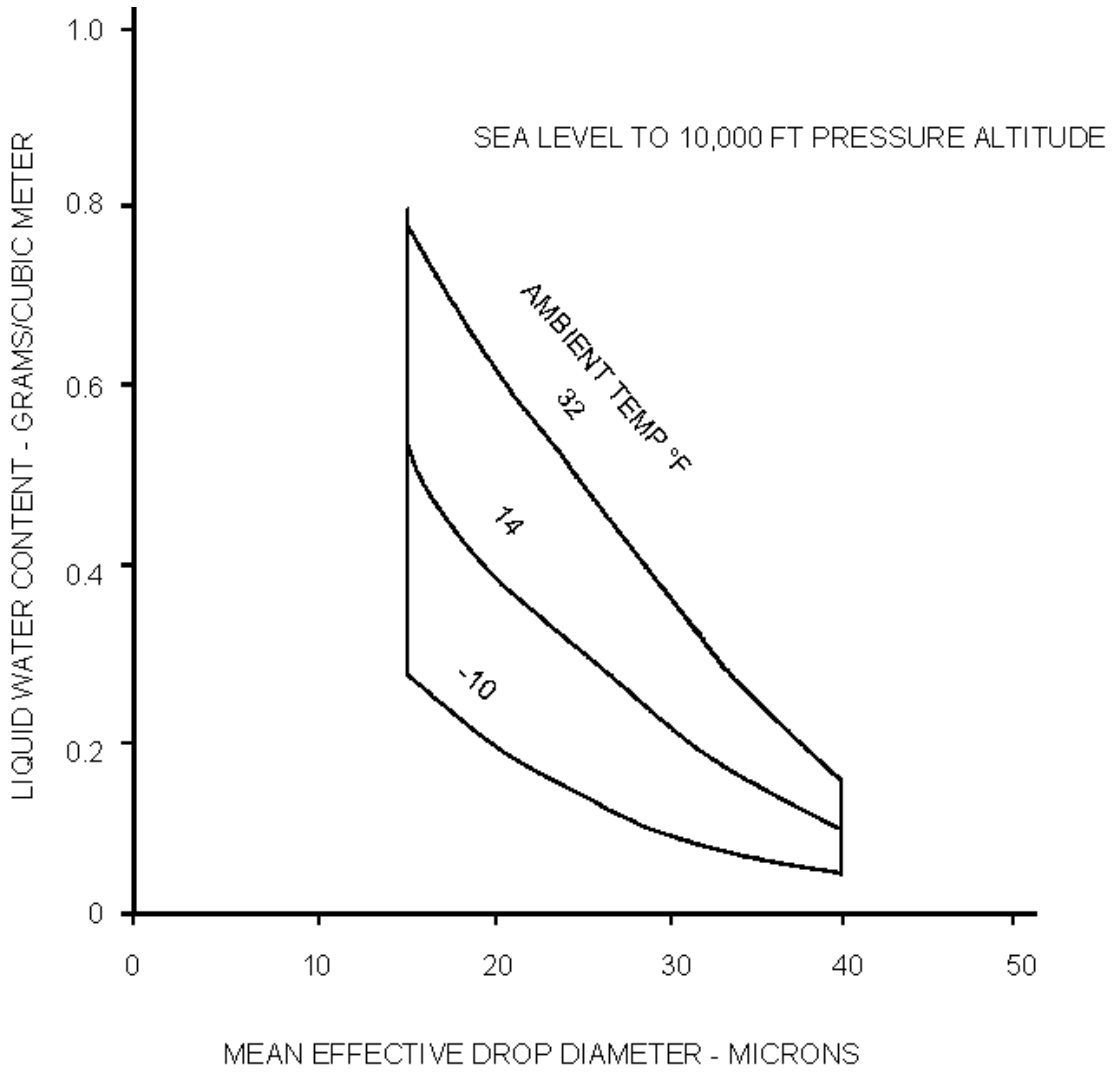

FIGURE AC 29.1419-3 CONTINUOUS ICING -
LIQUID WATER CONTENT VS. DROP DIAMETER

Figures AC 29.1419-1 through 4 represent one approach to a 10,000-foot altitude limit. See Paragraph b(5)(iii) for a discussion on this approach.

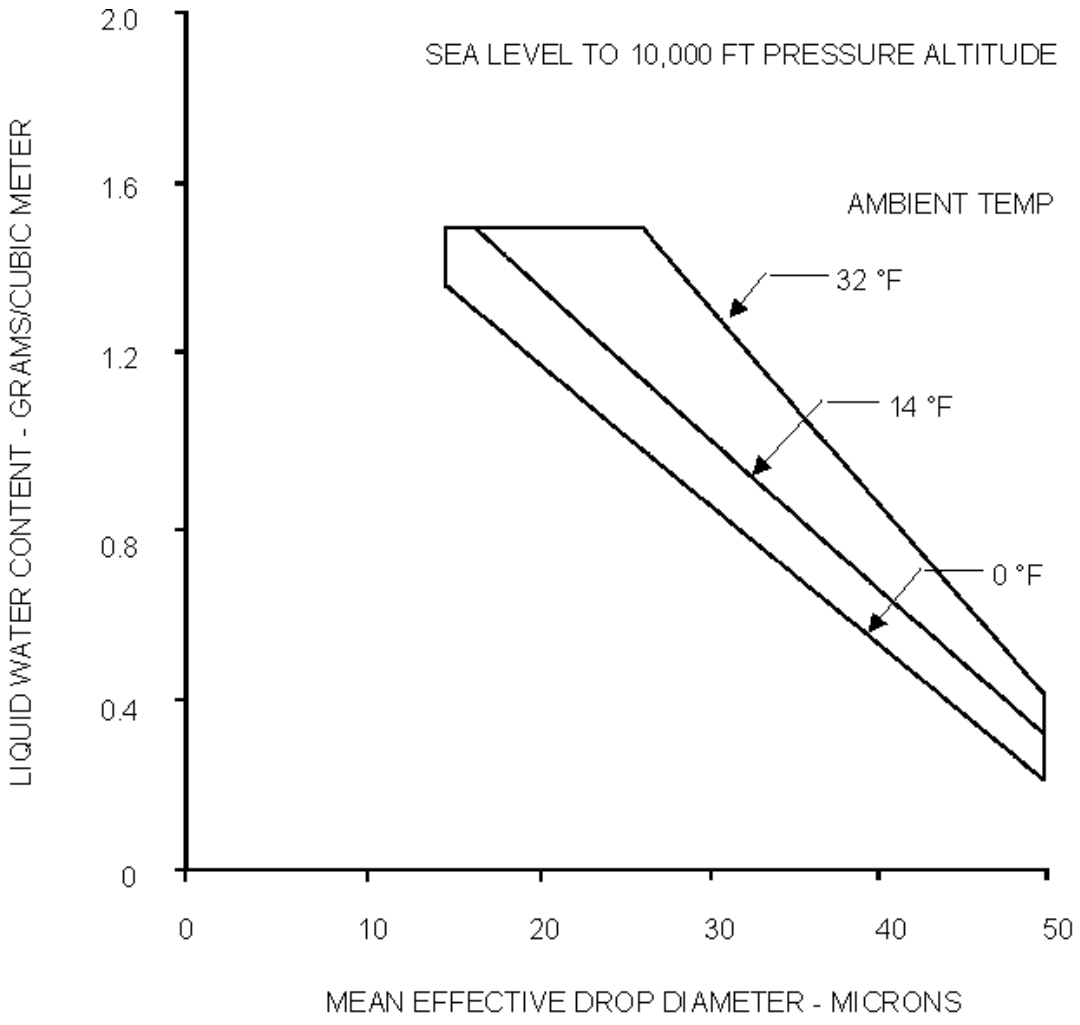

FIGURE AC 29.1419-4 INTERMITTENT ICING - LIQUID WATER CONTENT VS DROP DIAMETER

Figures AC 29.1419-1 through 4 represent one approach to a 10,000-foot altitude limit. See Paragraph b(5)(iii) for a discussion of this approach.

SUBPART F - EQUIPMENT

MISCELLANEOUS EQUIPMENT

AC 29.1431. § 29.1431 ELECTRONIC EQUIPMENT.

a. Background. This section contains some specific requirements for electronic equipment in the rotorcraft. The principal requirements of this section are that radio and navigation equipment must be free from hazards, both in themselves and in their effect on any other items installed in the rotorcraft, and that operation of the radio and navigation equipment does not interfere with operation of any other required avionics.

b. Procedures. In showing compliance with this section, tests and analysis should be performed as necessary to determine that:

(1) All radio and navigation equipment is installed and operated in such a manner that it does not result in hazards to the rotorcraft. It also should not have an effect on any other components of the rotorcraft such that a hazardous condition is created. Note that consideration should be given to the effects of critical environmental conditions.

(2) All radio and navigation systems and equipment should be installed and operated in a manner that will not have a detrimental effect on the proper functioning of any electronic equipment or system required by the FAR. It should be noted that §§ 29.1301 (reference paragraph AC 29.1301) and 29.1309(b) through (d) (reference paragraph AC 29.1309) apply to all installed equipment and systems and § 29.1309(a) applies to all systems and equipment required by Parts 21 through 49. As an example of showing compliance with this section, consider a high frequency radio (HF) system installation. The first thing to determine is that the installation and operation of the HF system cannot create a hazard. Consideration may be necessary in hazardous situations such as precipitation on the antenna. Next, it should be determined that the operation of the HF does not cause interference to a system whose functioning is required by the FAR. An example of unacceptable interference would be if operating the HF transmitter caused one of the navigation radios to malfunction.

(3) Finally, it should be determined that other systems do not interfere with the HF system. Additional guidance on the testing of avionics equipment and installation is contained in paragraph AC 29 MG 1.

AC 29.1433. § 29.1433 VACUUM SYSTEMS.

a. Explanation. Vacuum systems have been utilized on some rotorcraft to provide an energy source for the flight instruments. This specific rule addresses the potential hazards which are peculiar to vacuum system installations. The possible fire hazards presented by these systems are of particular concern.

b. Procedure. The following items should be specifically addressed when evaluating a vacuum system installation:

(1) Pressure and Temperature Protection. The high-pressure outlet of the vacuum pump should have a means to automatically relieve the pressure if it becomes excessively high or the air temperature becomes excessively hot.

(2) Fire Hazard Protection. The components of the vacuum system that are mounted in a designated fire zone should be fire resistant. This includes engine or transmission driven pumps if they are in a fire zone. The discharge side of the pump may emit flammable fluids. This discharge side of the pump, along with its associated lines and fittings, should meet the criteria in paragraph AC 29.1183.

AC 29.1435. § 29.1435 HYDRAULIC SYSTEMS.

a. Reference Regulations. The following sections of Part 29 are either incorporated in the provisions of § 29.1435 or are otherwise applicable to hydraulic system design:

(1) Section 29.695. Paragraph AC 29.695 covers power boost and power operated control systems.

(2) Section 29.861. Paragraph AC 29.861 covers fire protection of structure, controls, and other parts.

(3) Section 29.863. Paragraph AC 29.863 covers flammable fluid fire protection.

(4) Section 29.1183. Paragraph AC 29.1183 covers lines, fittings, and components.

(5) Section 29.1185. Paragraph AC 29.1185 covers flammable fluids.

(6) Section 29.1189. Paragraph AC 29.1189 covers shutoff means.

(7) Section 29.1309. Paragraph AC 29.1309 covers the requirements for functioning and reliability, and prevention of hazards if malfunctions or failures occur.

(8) Section 29.1322. Paragraph AC 29.1322 covers warning, caution, and advisory lights.

b. System Design. It is assumed that the hydraulic system is to be utilized to operate the primary control system of the rotorcraft and the rotorcraft cannot be safely operated without the hydraulic system.

(1) Section 29.1309, paragraphs (a) and (b), provides for functioning reliably under any foreseeable operating condition and prevention of hazards after any malfunction or failure.

(2) The substantiating data should include a failure analysis that considers every possible system component failure, such as (but not limited to) ruptured lines, pump failure, regulator failure, ruptured seals, clogged filters, broken pilot valve connections, etc.

(3) The requirements of § 29.1309(a) and (b) are met by dual independent hydraulic systems from the reservoir, hydraulic pump, regulator, connecting tubing, and hoses through the actuators. There must be no commonality in the fluid-containing components. A break in one system should not result in fluid loss in the remaining system.

(4) The pumps should be separated as far as practicable; i.e., on opposite sides of the rotor drive transmission, on separate engines, or one pump on an engine and the other on the rotor drive transmission. The tubing and hoses should also be routed with as much physical separation as practicable. The purpose of this separation is to prevent total loss of the hydraulic systems in the event of a malfunction such as fire, or rotor burst wherein one projectile could disable both systems.

(5) Dual actuators must be designed to assure that any single failure, such as a cracked housing, broken interconnecting input, or output link, does not result in loss of total hydraulic system function.

(6) If the assumption under (b) above does not apply and the pilot can control the rotorcraft without undue fatigue after loss of the hydraulic system, then a single hydraulic system is acceptable.

(7) The pressure-indicating system required by § 29.1435, paragraph (a)(3), can be satisfied with a dial, vertical scale, or digital indicator. The indicator should enable the crew to detect pressure trends. Paragraph AC 29.1322 concerns § 29.1322 regarding proper colors for annunciators if they are used to supplement the indicating system.

(8) An analysis or a combination of analysis and tests must be included in the substantiating data file to show compliance with paragraphs (a)(1), (a)(2), and (a)(4) of § 29.1435.

(9) Extra caution should be exercised to assure that control input forces at the mechanical connection to the actuator pilot valves do not exceed their intended value. Consideration should be given to the most adverse tolerance buildup in parts fabrication and control system rigging.

(10) The substantiating data should show that the hydraulic components will perform their intended function reliably under the most adverse continuous and short-time environmental conditions to which they are exposed. These variables include but are not limited to temperature, humidity, vibration, altitude, and shock. Paragraph AC 29.1309b(2)(i) is a method of temperature correction to cover the entire operating temperature envelope being certified.

(11) The system component strength must be sufficient for its material fatigue life to exceed the number of cycles imposed by pump ripple pressure.

c. Installation Precautions and Fire Protection.

(1) All components and tubing routed through fire zones may be designed to comply with the fire protection requirements of §§ 29.1183, 29.1185, and 29.1189. As an alternative, a fireproof shield may be used around the component to be protected. The component should be sufficiently protected to assure fluid leakage will not occur and fuel the fire.

(2) All hydraulic lines should be sufficiently isolated from the engine bleed air lines, environmental control unit, oil cooler, or other heat source to assure expected line life.

(3) If flammable hydraulic fluid is used, the hydraulic components should be isolated from ignition sources to assure that failure of any of the hydraulic components will not result in a fire or explosion. In the case of electrical ignition sources in the proximity of hydraulic components, the electrical equipment should be hermetically sealed or otherwise substantiated as not being an ignition source. (Reference paragraph AC 29.1309b(1)(i).)

(4) The installation detail should be thoroughly reviewed for adequacy of line clamping and clearance from sharp edges. As much physical separation as possible should be provided between hydraulic lines and electrical cables.

(5) While the control system is being moved from stop to stop, observation should be made to determine that hose flexing and tube bending is minimized.

d. Testing.

(1) Individual components should be substantiated by either vendor’s or primary manufacturer’s laboratory test reports. These tests should establish performance ratings such as pressures, flow rates, environmental capability, etc., to be approved.

(2) After the total system is installed, ground tests should be conducted to assure the system performs as intended and that each component is functioning within its design rating.

(3) If the total system design permits each combined independent power source and actuator to be disabled by shutoff valves, engine shutdown, etc., each combination should be disabled and the remaining combination verified to perform the necessary control functions. The test should be accomplished again with the functioning combination disabled and the disabled combination functioning. These tests should be accomplished first by ground tests, then repeated in flight.

(4) Temperature and pressure instrumentation should be provided at the critical points in the system to meet the provisions of d(2) above. Temperature results should be corrected for hot day conditions. (Paragraph AC 29.1309b(2)(i) gives a recommended procedure.)

(5) All controls should be cycled throughout their complete range of travel while accomplishing d(2) above.

(6) Satisfactory hydraulic system performance should be verified while the pump drive sources (rotor, engine, etc.) are individually varied throughout their approved operating range.

(7) Flight tests should be conducted throughout all altitudes, maneuvers, and control ranges while the system is instrumented as in d(2) and (4) above to determine that component ratings are not exceeded.

AC 29.1439. § 29.1439 PROTECTIVE BREATHING EQUIPMENT.

a. Explanation. This paragraph prescribes minimum requirements for eye and respiratory protection from toxic atmospheres during in-flight emergencies if one or more cargo or baggage compartments are to be accessible in flight. The equipment provided shall assure the crew protection against an oxygen deficient, toxic or highly irritating environment such as smoke.

b. Procedures.

(1) The equipment should provide a good fit for the range of intended users.

(2) A donning procedure should be provided by the manufacturer, evaluated, and the final procedure included in the Rotorcraft Flight Manual.

(3) The equipment should accommodate crewmembers who wear corrective glasses. Nominal position of eyeglasses should not be compromised. The equipment should not cause distortion or undue discomfort.

(4) The equipment donned under the stress of emergency should orient to the face and head, and interface to mating equipment, if required, in an obvious and

uncomplicated manner. Respiratory and eye protection should be provided in a manner that does not compromise the crew's ability to perform required tasks.

(5) Any system that interfaces with existing components, should demonstrate satisfactory performance when operated with these components.

(6) For systems that require positive pressure to furnish satisfactory protection, a positive pressure vs. gas consumption curve should be supplied with the system along with instructions on the proper matching of the system or components to assure the minimum duration requirements of the standard are met.

(7) TSO-C99 and C116 are for Protective Breathing Equipment. If equipment is considered that is not qualified to one of these TSO's, it is recommended that their provisions be reviewed and used as a basis for a qualification program for the equipment being considered. TSO-C99 provides minimum performance requirements for emergency equipment which provides flight deck and cabin crewmembers with eye and respiratory protection from toxic atmospheres during in-flight emergencies. TSO-C116 results in protective breathing equipment that provides any crewmember with the ability to locate and combat a fire within the aircraft cabin or any other accessible compartment.

(8) Additional information regarding oxygen supply systems can be found in paragraph AC 29 MG 6.

AC 29.1457. <u>§ 29.1457 (Amendment 29-6) COCKPIT VOICE RECORDER</u>.

a. <u>Explanation</u>. The function of the cockpit voice recorder (CVR) is to provide a record of the crew communications preceding an accidental crash of the rotorcraft. Over the last several years, the National Transportation Safety Board (NTSB) has determined that CVR's are invaluable in determining probable cause of an accident. Because of this fact and acts of Congress, the use of CVR's is required on many rotorcraft involved in passenger-carrying operations.

b. <u>Procedures</u>. The following areas are of particular consideration in the approval of a CVR installation.

(1) <u>Equipment Qualifications</u>. The CVR must be approved. The most common way of obtaining an approval is to qualify the CVR (and associated control panel, if appropriate) to TSO C84.

(2) <u>Cockpit Area Microphone (CAM</u>). The third channel of recorded information is specified to be from a cockpit area microphone or from voice activated lip microphones at the first and second pilot stations. It should be noted that a continuously recording or "hot" microphone at both the first and second pilot stations would satisfy this CAM requirement. Due to the ambient noise level in rotorcraft, the use of "hot" microphone results in objectionable constant "hissing" in the pilot's

headsets. Therefore, it is recommended that “hot” microphones not be used on rotorcraft.

(3) CVR Mechanical Installation. The CVR or the portion thereof which contains the recording should be physically located to enhance the probability of the recording surviving a crash. Normally, such a location would be in the lower portion of the rotorcraft as far aft as possible.

(4) Intelligibility of Recordings. Tests should be accomplished to determine that the recording is intelligible enough to make a positive identification of the speaker and the words or phrases spoken. This is usually accomplished by a flight test that provides an operation to produce the maximum cockpit background noise. The operation should provide for the normal speech of all crewmembers to be recorded on the pertinent channels. Then, during playback, preferably using a different listener, the listener should be able to identify the different crewmembers, the words and phrases spoken by the crew, and the radio communications made by and to the crew. The use of special filters and multiple playbacks to improve intelligibility is acceptable.

(5) Electrical Power Supply. The rule requires that the CVR should be supplied with power from a reliable source that does not jeopardize essential or emergency loads. For Category A rotorcraft, the CVR is not an essential load as specified in § 29.1309(e). However, since the functioning of the CVR is required by operating rules for some operations, it should be given priority over other nonessential loads.

(6) Self-Test Function. The CVR should be provided with a means in the cockpit that will allow a test to ensure the CVR is functioning properly. This may be accomplished by a manual playback feature.

(7) Bulk erasure. If this function is provided, the installation should be as follows:

(i) Any probable malfunction will not cause erasure of the recording medium.

(ii) The crash impact forces will not cause activation of the bulk erasure function.

(iii) Inadvertent actuation of the bulk erasure function is minimized. Usually, this is accomplished by requiring two separate actions to operate the bulk erasure.

AC 29.1459. § 29.1459 (Amendment 29-25) FLIGHT RECORDERS.

a. Explanation. The function of the flight recorder, sometimes referred to as a flight data recorder, is to provide a record of various aircraft and air data parameters during the operation of the rotorcraft. This data is utilized by accident investigators to

aid in determination of the probable cause of an accident. The problems associated with acquisition of this data in aircraft not equipped with flight recorders has been complicated by the use of advanced instrument systems such as EFIS, EICAS, and IDS. The very nature of the operation of these systems precludes the deduction of post-accident data, as was possible with mechanical and electromechanical instruments, annunciators and switches. The National Transportation Safety Board (NTSB) therefore made a recommendation to the FAA that aircraft should be required to have flight recorders. Subsequently Congress mandated that flight recorders be required on many rotorcraft involved in passenger-carrying operations in accordance with FAR 91 and FAR 135.

b. Procedures. The following areas are of particular consideration in the approval of a flight data recorder installation.

(1) Equipment Qualification. The recommended procedure to obtain an approval for the flight recorder (and associated control panel, if appropriate) is to qualify the flight recorder to TSO C-124. The required underwater locating device should be qualified to the provisions of TSO C-121.

(2) Recorded Parameters and Accuracy.

(i) Airspeed. The installed flight recorder for a Category A rotorcraft should record the airspeed with an accuracy of 3 percent or 5 knots (whichever is greater) from a speed of 80 percent of V_{TOSS} to V_{NE} in level flight, and an accuracy of 10 knots from a speed 10 knots less than V_{TOSS} to a speed of 10 knots more than V_Y in climb.

(ii) Pressure Altitude. The flight recorder should be capable of recording the pressure altitude of the rotorcraft with a range of -1,000 feet to the maximum certified altitude. The error of this recording at sea level, excluding instrument calibration error, should not exceed ±30 feet or a value of ±30 feet for each 100 knots of airspeed (whichever is greater).

(iii) Direction. The flight recorder should be capable of recording the magnetic heading of the rotorcraft within at least 10 degrees for any heading.

(iv) Vertical Acceleration. The flight recorder should be capable of recording the normal acceleration within the center of gravity range of the rotorcraft. The recommended range of this recording is an envelope of -3 to +6 G with an accuracy of at least ±0.2 G.

(v) Time Correlation. The flight recorder should provide a time scaled correlation between the data recorded and the time at which this information was presented to the first pilot via his required flight instruments. This correlation should normally be established before flight, and should have an accuracy rate that does not diverge by more than 4 minutes and 4 seconds in 8 hours.

(vi) Caveat. It should be noted that even though the requirements outlined above provide for compliance with the specific provisions of § 29.1459 regarding the acquired data and its accuracy, a flight recorder certified to these minimum standards will not meet the requirements of Appendix F of FAR 91 or Appendix C of FAR 135. If the flight recorder is to be used to comply with these operating rules, it is recommended that the appropriate appendix be consulted prior to requesting certification. The approved configuration may then be certified as meeting the requirements of the appropriate appendix.

(3) Flight Recorder Mechanical Installation. The non-ejectable flight recorder or the portion thereof which contains the recorded data should be physically located to enhance the probability of the recording surviving a crash. Normally, such a location would be in the lower portion of the rotorcraft as far aft as possible. However other locations in the rotorcraft may be suitable to meet the requirement to “minimize the probability of container rupture resulting from crash impact and subsequent damage to the record from fire.” The normal accelerometer should be located within the most restrictive center of gravity of the rotorcraft. The required underwater locator is usually mounted to the case of the flight recorder.

(4) Electrical Power Supply. The rule requires that the flight recorder should be supplied with power from a reliable source that does not jeopardize essential or emergency loads. For Category A rotorcraft, the flight recorder is not an essential load as specified in § 29.1309(e). However, since the functioning of the flight recorder is required by operating rules for some operations, it should be given priority over other nonessential loads.

(5) Self-Test Function. The flight recorder should be provided with a preflight test which will provide confirmation that the recorder and its recording medium are functioning properly.

(6) Data Erasure Feature. If this function is provided and the flight recorder is not powered solely by an engine or transmission driven generator, the installation should provide the following features:

(i) Any probable malfunction will not cause erasure of the recording medium.

(ii) The crash impact forces will not cause activation of the data erasure function.

(iii) Inadvertent actuation of the data erasure function is minimized. Usually, this is accomplished by requiring two separate actions to operate the data erasure.

AC 29.1461. § 29.1461 (Amendment 29-3) EQUIPMENT CONTAINING HIGH ENERGY ROTORS.

a. Explanation. This section contains requirements for the installation of equipment containing high energy rotors. A high energy rotor is any rotor which has sufficient kinetic energy to cause damage to surrounding structure, wiring, and equipment if a failure occurs. Turboshaft engine and APU rotors are not covered by this paragraph. One of the following requirements of § 29.1461 must be met.

(1) Paragraph (b) deals with damage tolerance, containment, and control devices.

(2) Paragraph (c) deals with containment and inoperative speed controls.

(3) Paragraph (d) deals primarily with equipment location.

b. Procedures.

(1) Compliance with § 29.1461(b) can be shown by a combination of analysis and test. A failure modes and effects and a stress analysis, together with a dynamic test, could be used to verify that the rotor would withstand the damage from environmental effects, and that the rotor case would contain any parts that may separate from the rotor shaft. The analysis and test should include a demonstration of the control device's ability to prevent limitations from being exceeded.

(2) If compliance with the requirements of § 29.1461(c) is chosen, a test must be conducted which demonstrates that all parts from any type failure of a high energy rotor will be contained when that rotor is operating at the highest speed obtainable, with all speed control devices inoperative. This containment must not damage any components, systems, or surrounding structures that are essential for continued safe flight.

(3) If compliance with § 29.1461(d) is chosen, the location of the high energy rotor must be in an area where uncontained failed parts will not damage other components, systems, or surrounding structure which are essential for continued safe flight. It must also be shown that there is no possibility for failed, uncontained parts to enter the cabin area and endanger any occupant.

CHAPTER 2. PART 29
AIRWORTHINESS STANDARDS
TRANSPORT CATEGORY ROTORCRAFT

SUBPART G - OPERATING LIMITATIONS AND INFORMATION

OPERATING LIMITATIONS

AC 29.1501. § 29.1501 (Amendment 29-15) OPERATING LIMITATIONS - GENERAL.

This section simply requires specified operating limitations in addition to any other information necessary for the safe operation of the rotorcraft to be determined. Secondly, it requires that this pertinent information be made readily available to the crewmembers as required in the various sections of this subpart.

AC 29.1503. § 29.1503 AIRSPEED LIMITATIONS: GENERAL.

a. Explanation. This section requires that a safe operating speed range be established for all rotorcraft. If the safe operating speed range varies with operating conditions (rotor speed, power, etc.), ambient conditions (altitude and/or temperature), rotorcraft configuration (gross weight, center of gravity, and/or external equipment), or type of operation (in ground effect (IGE), instrument flight rules (IFR), etc.), airspeed limitations that correspond with the most critical combinations of these factors must be established.

b. Procedures.

(1) Airspeed Limitations. The airspeed limitations for each critical combination of factors are established by tests or analyses and verified by flight test. The following are airspeed limitations that are typically required depending on the particular rotorcraft design:

(i) V_{NE} (Power On). See paragraph AC 29.1505.

(ii) V_{NE} (One Engine Inoperative (OEI)). See paragraph AC 29.1505.

(iii) V_{NE} (Power Off). See paragraph AC 29.1505.

(iv) V_{LO} (Maximum Airspeed for Landing Gear Operation). Compliance with structural, handling qualities, and controllability requirements should be demonstrated at the airspeed limit.

(v) V_{LE} (Maximum Airspeed Landing Gear Extended). If this airspeed limit differs from the maximum gear operation speed, compliance with the applicable structural, handling qualities, and controllability requirements should be demonstrated.

(vi) Low Speed Flight Limitation. It is permissible for the applicant to establish a minimum airspeed operating limitation as a function of weight, altitude, and temperature as long as there is still a practical flight envelope.

(vii) V_{MINI} (Minimum IFR Speed). The minimum speed for which compliance with the IFR handling qualities requirements has been demonstrated should be established as a limit for IFR operations.

(viii) Maximum Sideward and Rearward Flight Speed. The maximum demonstrated sideward flight or crosswind hover and rearward flight or tailwind hover airspeeds should be provided in the RFM. If these maximum speeds resulted from a control margin limitation, they should be included in the airspeed limitations section of the RFM. If adequate control margin remained for the critical combination of rotorcraft configuration and ambient conditions, the maximum demonstrated sideward or rearward flight airspeeds should be included in either the performance section or the limitations section of the RFM as the applicant desires.

(ix) Maximum Airspeeds for Special Configurations or Special Equipment. Standard configuration airspeed limits frequently have to be reduced for specific changes or external modifications. The following are examples of special equipment or configurations that have required additional airspeed limitations:

(A) Doors open or doors off.

(B) External hoist/cargo hook (stowed).

(C) Fixed or emergency flotation gear.

(D) External avionics equipment (large antennas, wires, etc.)

(E) External fuel tanks.

(F) Skid pad or ski equipment modifications to standard skid type landing gear.

(x) Maximum Airspeeds after Failure of Required Equipment. Rotorcraft that require auxiliary equipment such as stability augmentation systems to comply with FAR requirements throughout the approved operating envelope frequently require airspeed limitations following failure of part or all of this system in order to comply after the failure. The following are examples of auxiliary equipment that have required maximum airspeed limitations after failure of all or part of the system:

(A) Stability Augmentation Systems (SAS).

(B) Automatic Flight Control Systems (AFCS).

(C) Fly-by-Wire Elevator Systems (FBW).

(D) Air Data Computer Systems (ADC).

(2) Groundspeed Limitations. Although not specifically required by this "airspeed limitations" regulation, it may be necessary to establish "groundspeed" limitations for wheel-gear-equipped rotorcraft. These limitations are required to show compliance with the ground-handling characteristic requirements, structural strength requirements, or the ground-loads requirements. However because of the operational similarity of groundspeed limits to airspeed limits, it is a common practice to include groundspeed limitations under the airspeed limitations heading in the flight manual. For this reason, groundspeed limitations are included in this paragraph of the AC. Groundspeed limitations should be established with adequate safety margins to account for the possible inaccuracies associated with the necessity for the pilot to estimate groundspeed from indicated airspeed and available wind speed and direction information during actual operations. The following are examples of groundspeed limitations that have been required during past type certification programs:

(i) Maximum Groundspeed for Takeoff or Landing. The maximum acceptable groundspeed that can safely be used for wheel gear equipped rotorcraft takeoff and landing maneuvers should be determined based on landing gear limitations or ground controllability limitations. This speed should be fast enough to account for landing touchdown speeds at the maximum approved density altitude for normal takeoff and landing.

(ii) Maximum Groundspeed for Brake Application. The maximum speed at which the wheel brakes may be applied without exceeding maximum brake energy capabilities should be determined for wheel gear equipped rotorcraft. This speed should be verified by test throughout the approved takeoff and landing envelope of the rotorcraft. The critical combination of gross weight and density altitude for brake energy considerations may be determined by analysis to minimize the required amount of testing. The maximum brake application groundspeed should be high enough to encompass brake application during landing at the maximum approved density altitude.

(iii) Other Groundspeed Limitations. For some rotorcraft designs with skid type landing gear, it may be necessary to establish a maximum landing touchdown speed for normal operations to comply with structural requirements. Optional equipment configurations such as float equipment, skis, etc., which are attached to conventional landing gear skids may require maximum landing groundspeed limits that are less than the limit for the basic rotorcraft.

AC 29.1505. § 29.1505 (Amendment 29-24) NEVER-EXCEED SPEED.

a. Explanation.

(1) General. This rule requires the never-exceed speed (V_{NE}) for both power-on and power-off flight to be established as operating limitations. The rule specifies how to establish and substantiate these limits.

(2) Power-on Limits.

(i) All Engines Operative (AEO).

(A) The all-engines-operating V_{NE} is established by design and substantiated by flight tests. The V_{NE} limits are the most conservative value that demonstrates compliance with the structural requirements (§ 29.309), the maneuverability and controllability requirements (§ 29.143), the stability requirements (§§ 29.173 and 29.175), or the vibration requirements (§ 29.251). The power-on V_{NE} will normally decrease as density altitude or weight increases. A variation in rotor speed may also require a variation in the V_{NE}. The regulation restricts the number of variables that are used to determine the V_{NE} at any given time so that a single pilot can readily ascertain the correct V_{NE} for his flight condition with a minimum of mental effort. Rotorcraft that are equipped with air data computers or other similar equipment are allowed to vary as many parameters as desired, if the final results are no more than two parameters that define the V_{NE} displayed to the pilot in an unambiguous manner. These rotorcraft must also have a method for determining V_{NE} that complies with the regulation in the event the air data computer system fails. This method is usually more conservative than the automatic system because of the limitation in the number of parameters that can be varied.

(B) To ensure compliance with the structural requirements (§ 29.309), vibration requirements (§ 29.251), and flutter requirements (§ 29.629), the all-engines-operating V_{NE} should be restricted so that the maximum demonstrated main rotor tip mach number will not be exceeded at 1.11 V_{NE} for any approved combination of altitude and ambient temperature. Previous rotorcraft cold weather tests have shown that the rotor system may exhibit several undesirable and possibly hazardous characteristics due to compressibility effects at high advancing blade tip mach numbers. As the center of pressure of the advancing rotor blade moves aft near the blade tip due to the formation of localized upper surface shock waves, rotor system loads may increase, the rotor system may exhibit an aerodynamic instability such as rotor weave, rotorcraft vibration may increase substantially, and rotorcraft static or dynamic stability may be adversely affected. Which, if any, of these adverse characteristics are exhibited at high rotor tip mach numbers is dependent on the design of each particular rotor system. FAA/AUTHORITY experience has shown some adverse characteristics exist for all the types of rotor systems (articulated, semirigid, rigid, etc.) and the various rotor blade designs evaluated at high advancing blade tip mach numbers during past certification programs. Therefore, it has been FAA/AUTHORITY policy to establish V_{NE} so that it is not more than 0.9 times the maximum speed substantiated for advancing blade tip mach number effects for the critical combination of altitude, approved power-on rotor speed, and ambient temperature conditions. This policy was incorporated as a specific regulatory requirement with Amendment 29-24 to § 29.1505. High main rotor tip mach

numbers obtained power off at higher than normal main rotor rotational speeds should not be used to establish the maximum power-on tip mach number V_{NE} limit. In addition, since the onset of adverse conditions associated with high tip mach numbers can occur with little or no warning and amplify very rapidly, no extrapolation of the maximum demonstrated main rotor tip mach number V_{NE} limitation should be allowed.

(C) A maximum speed for use of power in excess of maximum continuous power (MCP) should be established unless structural requirements have been substantiated for the use of takeoff power (TOP) at the maximum approved V_{NE} airspeed. TOP is intended for use during takeoff and climb for not more than 5 minutes at relatively low airspeeds. However, FAA/AUTHORITY experience has shown that pilots will not hesitate to use TOP at much higher than best-rate-of-climb airspeeds unless a specific limitation against TOP use above a specified airspeed is included in the RFM. Structural and fatigue substantiations have not normally included loads associated with the use of TOP at V_{NE}. Thus, a TOP airspeed limitation should be established from the structural substantiation data to preclude the accumulation of damaging rotor system and control mechanism loads through intentional use of the TOP rating at high airspeeds.

(ii) One Engine Inoperative (OEI). An OEI V_{NE} is generally established through flight test and is usually near the OEI V_H of the rotorcraft. It is the highest speed at which the failure of the remaining engine must be demonstrated. For rotorcraft with more than two engines, the appropriate designation would be "one-engine-operating" V_{NE} and would be that speed at which the last remaining engine could be failed with satisfactory handling qualities. It is possible that a rotorcraft with more than two engines could have different V_{NE}'s depending upon the number of engines still operating. It is recommended that the OEI V_{NE} not be significantly lower than the OEI best range airspeed. For the last remaining engine failure case, a multiengine rotorcraft may require an OEI V_{NE} if the handling qualities are not satisfactory, if the rotor speed decays below the power-off transient limits, or if any other unacceptable characteristic is found at speeds below the all-engine-operating V_{NE}.

(3) Power-off Limits.

(i) A power-off V_{NE} may be established either by design or flight test and should be substantiated by flight tests. A power-off V_{NE} that is less than the maximum power-on V_{NE} is generally required if the handling qualities or stability characteristics at high speed in autorotation are not acceptable. A limitation of the power-off V_{NE} may also be used if the rotorcraft has undesirable or objectionable flying qualities, such as large lateral-directional oscillations, at high autorotational airspeeds. The power-off V_{NE} must meet the same criteria for control margins as the power-on V_{NE}. The regulation requires that the power-off V_{NE} be no less than the speed midway between the power-on V_{NE} and the speed used to comply with the rate of climb requirements for the rotorcraft. When the regulation was written, rotorcraft V_{NE} speeds were significantly lower than those of recently certificated rotorcraft. The high V_{NE} speeds of current

rotorcraft result in relatively high values for the power-off V_{NE}. Speeds lower than that specified in the regulation have been found acceptable through a finding of equivalent safety if the selected power-off V_{NE} is equal to or greater than the power-off speed for best range. In any case, the power-off V_{NE} must be a high enough speed to be practical. A demonstration is required of the deceleration from the power-on V_{NE} for Category B rotorcraft, or OEI V_{NE} for transport rotorcraft with Category A engine isolation, to the power-off V_{NE}. The transition must be made in a controlled manner with normal pilot reaction and skill.

(ii) In addition to the minimum speed requirements for power-off V_{NE}, the rule restricts the manner in which power-off V_{NE} can be specified. Power-off V_{NE} may be a constant airspeed which is less than power-on V_{NE} for all approved ambient condition/gross weight combinations; a series of airspeeds varying with altitude, temperature or gross weight that is always a constant amount less than the power-on V_{NE} for the same ambient condition/gross weight combination; or some combination of a constant airspeed for a portion of the approved altitude range and a constant amount less than power-on V_{NE} for the remainder of the approved altitude range.

b. Procedures. The tests to substantiate the different V_{NE} speeds are ordinarily conducted during the flight characteristics flight tests. The flight test procedures are discussed for the various limiting areas in earlier paragraphs of this AC. The controllability test techniques are covered in paragraph AC 29.143, static stability test techniques in paragraph AC 29.175, and the vibration test techniques in paragraph AC 29.251.

AC 29.1509. § 29.1509 ROTOR SPEED.

a. Explanation.

(1) General. This rule requires minimum and maximum power-off rotor speeds to be established as operating limitations. It also specifies the appropriate margins below and above these limits which must be substantiated structurally and by flight tests. In addition to addressing power-off limits, the rule requires that minimum power-on RPM be established as an operating limit, and it specifies conditions, by reference, for establishing a minimum appropriate power-on speed.

(2) Power-off Limits. The power-off or autorotational RPM limits are established by design and substantiated by structural testing. Limits are confirmed during flight testing. Critical components must be designed for RPM values at least 5 percent above and below the maximum and minimum approved RPM values respectively. This 5 percent conservative speed requirement is in addition to the other structural safety factors built into the design requirements. A transient limit lower than the minimum in-flight RPM (power-off) will be defined to cover the final phase of a total power-off landing. Maximum weight is ordinarily critical for both tests. At low RPM, high coning angles can produce high stress levels in blade bending. Large flapping angles or controllability problems may also develop. At high RPM values, centrifugal

forces on the blades are at their highest and stress levels on rotating components such as blade grips may be critical. If a particular model has a very large weight spread between minimum and maximum gross weights, the applicant may elect to specify two ranges of power-off RPM dependent upon weight. This may be needed to assure adequate power-off rotor RPM with collective full down without requiring the very low power-off rotor speeds at maximum weight, a condition which would be inappropriate for operation of the rotorcraft in service. Transient power-off RPM ranges may also be approved if needed for engine failure conditions; however, these transients must also be substantiated structurally and in flight.

(3) Power-on Limits. The minimum power-on rotor speed must be established so that it is no less than the minimum rotor speed which has been established structurally. The minimum power-on speed also cannot be less than those values achieved during any of the critical maneuvers during flight test substantiation of the rotorcraft. A 5 percent margin between the substantiated value and the limit value is not required as in the power-off case. This rule also makes reference to § 29.33(a)(1) and (c)(1) for establishing the minimum power-on value. The reference to paragraph (a)(1) is intended to assure that the minimum power-on RPM value is low enough to accommodate the RPM values which will occur as a result of power changes and flight maneuvers expected in service. The reference to (c)(1) establishes the requirement that the minimum power-on RPM can be no lower than the minimum power-off RPM. For single engine rotorcraft, this assures some transition capability to power-off flight conditions when an engine fails. For multiengine rotorcraft, it allows transition from power-on to power-off conditions as when transitioning from a cruise condition to a power-off descent. Although the maximum power-on value is not specifically referred to in this section, it must be established as a limitation per § 29.309. Since the considerations regarding smooth transition from power-on to power-off flight [reference § 29.141(b)] are similar to the minimum power-on condition described above, it may be inferred that maximum power-on RPM may not be greater than maximum power-off RPM.

(4) Transient Limits. Transient limits must be substantiated and approved in a similar manner. Transient limits may be outside of the steady state “red-line” limits.

b. Procedures.

(1) Tests for substantiation of stress and vibration at the 5 percent underspeed and overspeed conditions in autorotation are ordinarily conducted as a part of the flight strain survey. For purposes of finding compliance with this rule, it is suggested that as a minimum, FAA/AUTHORITY certification personnel witness applicable portions of the test program and monitor telemetry or flight recorded data, as necessary, to verify compliance with this rule. Tests at maximum weight and at a relatively light weight condition are normally sufficient. Tests must be conducted at speeds up to V_{NE} (power-off) at 105 percent of maximum RPM and 95 percent of minimum RPM. It is also appropriate to investigate speeds to 1.1 V_{NE} (power-off) at maximum and minimum power-off RPM values. The normal low pitch stop may need to be downrigged in order

to achieve the high RPM values at high speed. This feature should be coordinated with the manufacturer prior to the flight strain survey to assure necessary conditions are achieved. It may be difficult to obtain minimum power-off RPM prior to encountering retreating blade stall at combinations of high weight, high collective pitch, low rotor speed, and high forward speed. In this case V_{NE} (power-off) can either be decreased in accordance with § 29.1505(c) or the low RPM range can be evaluated in a transient manner during engine failure testing at high speed. Any condition in which blade stall is suspected should, of course, be investigated with a great deal of caution and build-up testing is recommended. The transient low RPM limit for power-off landings may be tested only during actual power-off landings. In that case, the 5 percent margin is not required.

(2) Testing for suitable minimum and maximum power-on RPM values may be conducted during the designated FAA/AUTHORITY flight test program. The combined engine and governor response must allow accomplishment of all appropriate flight maneuvers without exceeding minimum or maximum power-on rotor limits. As in the power-off case, appropriate transient ranges and limits may be approved when properly substantiated. Transient ranges should be evaluated using similar methods and techniques to those described above. Power-on RPM determination must include not only rotor system considerations but engine and drive system characteristics as well. It is important to remember that all power-on ranges must be eligible under the Part 33 engine approval and that the power-off range must include adequate margins from potentially hazardous drive system phenomena, such as drive shaft whirl modes.

AC 29.1517. <u>§29.1517 (Amendment 29-21) LIMITING HEIGHT-SPEED ENVELOPE</u>.

a. <u>Explanation</u>.

(1) This section requires that the height-velocity (HV) envelope developed in compliance with § 29.79 of the performance requirements be established as an operating limitation for Category A rotorcraft.

(2) For rotorcraft with FAR Part 29 and CAR Part 7 certification bases prior to Amendment 29-21, this section requires that the HV envelope be established as an operating limitation for Category B rotorcraft as well as Category A. The rule was revised by Amendment 29-21 to allow the HV envelope to be provided as performance information rather than as a limitation for rotorcraft meeting the revised § 29.1 Category B requirements. In addition, supplemental type certificates have been approved which allow Category B rotorcraft meeting the revised § 29.1(f) requirements to move the HV envelope from the limitations section to the performance section of the Rotorcraft Flight Manual (RFM). (See paragraph AC 29.1583.)

b. <u>Procedures</u>. The limiting height-speed envelope developed in accordance with § 29.79 should be established as an operating limitation or as performance information to be included in the RFM in accordance with §§ 29.1583(f) and 29.1587(b)(6). (See paragraphs AC 29.79, AC 29.1583, and AC 29.1587 for additional information.)

AC 29.1519. § 29.1519 WEIGHT AND CENTER OF GRAVITY.

a. Explanation. This rule requires that weight and center of gravity (CG) combinations which are substantiated structurally and also found satisfactory during flight tests (per §§ 29.25 and 29.27) must be established as operating limits. A related portion in § 29.1583(c) further requires that weight and CG limitations be entered in the Rotorcraft Flight Manual Limitations Section. Both maximum and minimum weight must be established as operating limitations along with the corresponding longitudinal and lateral centers of gravity for each condition. Weight and CG limits are discussed in more detail in paragraphs AC 29.25 and AC 29.27.

b. Procedures.

(1) The results of shifts in center of gravity with fuel burn should be evaluated. If it is possible to take off within the approved loading envelope and subsequently burn fuel to a condition which is significantly beyond the approved weight/CG envelope, then there should be appropriate instructions in the loading and/or operating procedures of the RFM to avoid this condition.

(2) Typical loading conditions should not result in weight/CG combinations outside of approved limits. A minimum of two loadings, appropriate to the rotorcraft configuration, should be evaluated. These should include critical combinations of maximum/minimum variables for fuel, passengers, and crew. If this results in loading outside approved limits, special interior placarding or cautionary information should be provided in appropriate sections of the Rotorcraft Flight Manual.

AC 29.1521. § 29.1521 (Amendment 29-34) POWERPLANT LIMITATIONS.

a. Explanation.

(1) This rule requires that the various parameters and operating conditions listed under each type of operation be evaluated and established as operating limitations. The procedures for establishing and verifying each powerplant limitation are discussed in the powerplant section of this AC. This rule requires that powerplant limitations be established for four specific types of operation or power ratings: takeoff, continuous, 2 1/2-minute, and 30-minute. Additional limitations are required to account for engine and transmission cooling and minimum required fuel grade. The 2 1/2-minute and 30-minute limitations are optional requirements intended for use only on multiengine rotorcraft after failure of one engine. These limits are generally referred to as one-engine-inoperative (OEI) limitations.

(2) It is important to differentiate between the rotorcraft powerplant limitations and the engine limitations as established under Part 33. For some parameters, these two limits may be identical, but frequently the engines will be capable of exceeding the maximum limitations substantiated for the combined powerplant installation. Limitations

established according to this rule may not exceed the engine limitations established in accordance with Part 33 but may be less than the Part 33 limits as desired by the applicant.

b. Procedures.

(1) Determine the limiting parameters for each required power rating according to the requirements of Part 29, Subpart E, Powerplant. (See applicable paragraphs of this AC for detailed procedures.)

(2) Provide the limitations established according to this rule to the rotorcraft crew through placards in accordance with § 29.1541, instrument markings in accordance with § 29.1549, and in the Rotorcraft Flight Manual Limitations Section in accordance with § 29.1583(b). (See paragraphs AC 29.1543 and AC 29.1583.)

AC 29.1521A. § 29.1521 (Amendment 29-26) POWERPLANT LIMITATIONS.

a. Explanation. Amendment 29-26 revises §§ 29.1521(f) and (g) and adds a new § 29.1521(h). The changes to §§ 29.1521(f) and (g) introduce the term “OEI” to emphasize and clarify the limitations on the use of the 2 ½-minute and 30-minute power ratings. This change added the introductory phrase “unless otherwise authorized.” In order to authorize use of these ratings, additional qualification tests or other adequate safety measures have been instituted. Both §§ 29.1521(f) and (g) have been reworded to set forth specific limitations on the use of these ratings. These changes were made to clarify the eligibility of these ratings. The new § 29.1521(h) establishes and defines a new continuous OEI power rating using terminology similar to that developed for the 2 ½-minute and 30-minute power ratings. This change ensures proper recognition in the powerplant limitations listing required by § 29.1583.

b. Procedures. All of the policy material pertaining to this section remains in effect. Additionally, the following procedures should be considered:

(1) Sections 29.1521(f) through (h) require limitations for OEI operation for multi-turbine engine powered rotorcraft. The same parameters required for the takeoff and continuous ratings should be established as limitations for each approved OEI rating (i.e., maximum rotational speed, time, gas temperature, and torque). Section 29.923 includes requirements for qualification of the rotor drive system for 2 ½-minute, 30-minute, and continuous OEI powers. Section 29.1501(a) requires that information necessary for safe operation should be established as limitations. Thus the establishment of OEI powerplant limitations is required even though not specifically addressed in § 29.1521.

(2) It is important to differentiate between the rotorcraft powerplant limitations and the engine limitations as established under Part 33. For some parameters, these two limits may be identical, but frequently, the engines will be capable of exceeding the maximum limitations substantiated for the combined powerplant installation. Limitations

established according to this rule may not exceed the engine limitations established in accordance with Part 33 but may be less than the Part 33 limits as desired by the applicant.

AC 29.1521B. § 29.1521 (Amendment 29-34) POWERPLANT LIMITATIONS.

a. Explanation. Amendment 29-34 adds §§ 29.1521(i) and (j). The new §§ 29.1521(i) and (j) introduce the 30-second and 2-minute OEI power rating limitations, respectively. These paragraphs define the limitations on the use of the 30-second and 2-minute power ratings using terminology similar to that developed for the 2 ½-minute and 30-minute power ratings. Additionally, these paragraphs require the ability to detect any damage which occurs due to the use of either 30-second or 2-minute OEI limits and requires that the procedures to inspect for such damage be provided in the instructions for continued airworthiness for either the engine and/or the airframe.

b. Procedures. All of the policy material pertaining to this section remains in effect. Additionally, the following procedures should be considered:

Sections 29.1521(i) and (j) require limitations for 30-second/2-minute OEI operation for multi-turbine engine powered rotorcraft. The same parameters required for the takeoff and continuous ratings should be established as limitations for each approved OEI rating (i.e., maximum rotational speed, time, gas temperature, and torque). These new ratings can only be approved as a rating in conjunction with the other. That is, a rotorcraft with a 30-second OEI rating must also have a 2-minute OEI rating and vice-versa. The 30-second and 2-minute OEI ratings are also limited to use for continued operation of the remaining engine(s) upon failure or precautionary shutdown of an engine. Upon the use of 30-second or 2-minute OEI, an inspection for damage to the airframe and/or engine should be conducted. The inspection should be accomplished per the procedures furnished by the airframe and engine manufacturers, and any damage occurring due to the use of these new ratings should be detected using these inspection procedures. Section 29.923 includes requirements for qualification of the rotor drive system for 30-second and 2-minute OEI powers. Section 29.1501(a) requires that information necessary for safe operation should be established as limitations. The limitation information provided in this paragraph should be provided in the flight manual. This includes the requirement for an inspection prior to further flight after the use of either 30-second or 2-minute OEI.

AC 29.1522. § 29.1522 (Amendment 29-17) AUXILIARY POWER UNIT LIMITATIONS.

a. Explanation.

(1) Any APU installed in a rotorcraft will have operating limitations which have been developed by design and testing. These APU operating limitations become part of the operating limitations for the rotorcraft.

(2) TSO-C77 establishes the minimum performance standards and limitations which gas turbine APU's should meet in order to be identified with the TSO marking.

b. Procedure.

(1) Limitations for APU's which meet the requirements of TSO-C77 will be contained in the APU model specification and in one or more manuals containing instructions for the installation, operation, servicing, maintenance, repair and overhaul of the APU. Data from these documents which are required by the TSO, should be included in the rotorcraft flight manual (RFM) and in maintenance manuals, as appropriate.

(2) APU's which do not meet the requirements of TSO-C77 should have the design and operating limitations defined and included in the operating limitations section of appropriate rotorcraft manuals. TSO-C77 can be used as a guide to identify and develop the detailed data which will be included in the rotorcraft flight and maintenance manuals.

AC 29.1523. § 29.1523 MINIMUM FLIGHTCREW.

a. Explanation.

(1) This rule requires that the minimum crew necessary to show compliance with the requirements of Part 29 or for safe operation of the rotorcraft be established as an operating limitation.

(2) The determination of minimum crew requirements is typically based on a subjective pilot assessment of the crew requirements for safe operation of each rotorcraft design. Certain regulations, such as the requirements for instrument flight rules (IFR), have specific quantitative differences between single-pilot and two-pilot requirements. However, most often the minimum crew requirement will be based on more subjective considerations such as location of necessary controls, pilot workload to accomplish required tasks, type of operation, and overall complexity of the rotorcraft design.

(3) Minimum crew requirements for the same type design may vary with the kind of operation. Many rotorcraft have been approved for a single-pilot crew for visual flight rules (VFR) operations but require a two-pilot crew for IFR operations. Other kinds of operations that may require more than one crewmember to meet type certification requirements are night operations, operations into known icing conditions, operations in falling and blowing snow, extended overwater operations, and external load operations.

(4) It is important to distinguish between the minimum crew requirements for compliance with Part 29 type certification regulations and the minimum crew

requirements of the various operating regulations (Parts 61, 91, 121, 133, 135, and 137). A rotorcraft may be type certified for a minimum crew of one and still be required to have a crew of two or more by the operating regulations for certain types of operation or by the workload associated with an operating environment. Therefore, an applicant should carefully consider the possible operational uses of any rotorcraft design and become familiar with the applicable operating regulations as well as the type certification requirements early in the design process.

(5) Although the rotorcraft configuration is typically certified with the pilot-in-command station in the right seat, the left seat may be used for the pilot-in-command if, in addition to the flight controls required to control the rotorcraft, the following are included for the pilot: throttle control including ability to shut down all engines, airspeed indication, altitude indication, rotor and engine RPM, and engine torque and exhaust gas temperature. The authority should evaluate a change to the pilot-in-command station.

(6) The applicant is encouraged to contact the responsible type certification office as early in the design phase as possible to initiate the qualitative assessment process. Cockpit layout drawings, instrument panel mockups, and full-scale cockpit mockups can be used to determine if required controls are accessible and to begin the pilot workload assessment for certain operations.

b. Procedures.

(1) General.

(i) A systematic evaluation and test plan is required for any new or modified rotorcraft. The methods for showing compliance should emphasize the use of acceptable analytical, simulation, and flight test techniques. The crew complement should be studied through a logical process of estimating, measuring, and then demonstrating the workload imposed by a particular cockpit design. When the minimum crew requirements have been determined, they should be included in the limitations section of the Rotorcraft Flight Manual in accordance with § 29.1583(d).

(ii) Appropriate analysis should be conducted by the applicant early in the design process. The specific method(s) of analysis should be selected on the basis of its predictive validity, sensitivity, reliability, applicability to the particular cockpit configuration, and availability of a suitable reference for comparison.

(2) Analytical Approach.

(i) One analytical approach defines workload as a percentage of the time available to perform tasks (Time Line Analysis). This process may be applied to an appropriate set of flight segments in which operationally important time constraints can be identified. This method is useful for evaluation of cockpit changes relating to overt pilot work such as control movements and data inputs. The generally accepted practice

involves careful selection of the limited set of flight scenarios and time segments that represent the range of operational requirements (including the range of normal and non normal procedures.) Time line analysis yields useful data when tasks must be performed within operationally significant time constraints. The adequacy of this method is very much dependent on an accurate determination of the time available. Absolute standards are not available for interpretation of obtained time required scores, but such records can be used to identify high or simultaneous workload demands for later testing in a simulator or aircraft, and comparisons can be made with overt workload demands in proven aircraft. However, the impact of cockpit changes on planning and decisionmaking is difficult to quantify by this method.

(ii) The most frequently used basis for deciding that a new design is acceptable is a comparison of a new design with previous designs proven in operational service. By making specific evaluations using the acceptable human factors techniques, and comparing new designs to a known baseline, it is possible to proceed with confidence that the changes incorporated in the new designs accomplish the intended result. When the new cockpit is considered, certain components may be proposed as replacements for conventional items, and some degree of rearrangement may be contemplated. New avionics systems may need to be fitted into existing panels, and newly automated systems may replace current indicators and controls. As a result of this evolutionary characteristic of the cockpit design process, there is frequently a reference cockpit design, which is usually a conventional aircraft that has been through the test of operational usage. If the new design represents an evolution, improvement attempt, or other deviation from this reference cockpit, the potential exists to make direct comparisons. Service experience should be researched to assure that any existing problems are understood and not perpetuated.

(iii) If preliminary analysis by the certification team identify potential problem areas, these areas should receive more extensive evaluation and data collection in order to verify compliance with § 29.1523. These concerns should be adequately addressed in the manufacturer's demonstration plan when submitted to the FAA/AUTHORITY**.**

(iv) If the new design represents a significant change in level of automation or pilot duties, analytic comparison to a reference design may have lessened value. Without a firm data base on the time required to accomplish both normally required and contingency duties, more complete and realistic simulation and flight testing will be required.

(3) Testing.

(i) In the case of the minimum crew determination, the final decision is reserved until the rotorcraft has been flown by experienced flight test pilots trained and current in the aircraft. More assurance is derived from actual flight tests than from earlier simulator tests or other synthetic or computer model procedures.

(ii) The test program should address the workload functions and factors listed below. For example, an evaluation of communications workload should include the basic workload required to properly operate the aircraft in the environment for which approval is sought. The goal is to evaluate workload with the proposed crew complement during realistic operating conditions, including representative air traffic and weather.

(A) Basic workload functions. The following basic workload functions are considered:

(1) Flight path control.

(2) Collision avoidance.

(3) Navigation.

(4) Communications.

(5) Operation and monitoring of aircraft engines and systems.

(6) Command decisions.

(B) Workload factors. The following workload factors are considered significant when analyzing and demonstrating workload for minimum flight crew determination:

(1) The accessibility, ease, and simplicity of operation of all necessary flight, power, and equipment controls, including emergency fuel shutoff valves, electrical controls, electronic controls, and engine controls.

(2) The accessibility and conspicuity of all necessary instruments and failure warning devices such as fire warning, electrical system malfunction, and other failure or caution indicators. The extent to which such instruments or devices direct the proper corrective action is also considered.

(3) The number, urgency, and complexity of operating procedures with particular consideration given to the specific fuel management schedule imposed by center of gravity, structural or other considerations of an airworthiness nature, and to the ability of each engine to operate at all times from a single tank or source which is automatically replenished if fuel is also stored in other tanks.

(4) The degree and duration of concentrated mental and physical effort involved in normal operation and in diagnosing and coping with malfunctions and emergencies.

(5) The extent of required monitoring of the fuel, hydraulic, electrical, electronic, deicing, and other systems while en route.

(6) The actions requiring a crewmember to be unavailable at his assigned duty station, including: observation of systems, emergency operation of any control, and emergencies in any compartment.

(7) The degree of automation provided in the aircraft systems to afford (after failures or malfunctions) automatic crossover or isolation of difficulties to minimize the need for any flight crew action to guard against loss of hydraulic or electric power to flight controls or to other essential systems.

(8) The communications and navigation workload.

(9) The possibility of increased workload associated with any emergency that may lead to other emergencies.

AC 29.1525. § 29.1525 (Amendment 29-24) KINDS OF OPERATION.

This rule states that the kinds of operation to which the rotorcraft is limited are established by demonstrated compliance with applicable certification requirements (primarily flight) and the equipment requirements established for that kind of operation. The basic flight characteristics requirements of Part 29 are suitable for day VFR approval. Additional night considerations appear in § 29.141(c) and in the operating rules. IFR requirements are addressed in § 29.141(c) and Appendix B to Part 29. Additional IFR equipment requirements are contained in the operating rules. Icing certification criteria are contained in paragraph AC 29.877. External load requirements for certification may be found in §§ 29.25(c) and 29.865(c) in addition to Part 133. Related § 29.1525(d) further requires that the approved kinds of operation must be listed in the operating limitations section of the Rotorcraft Flight Manual. The equipment that is necessary for a specific kind of operation other than basic day VFR operation should also be listed in the limitations section of the RFM.

AC 29.1527. § 29.1527 (Amendment 29-15) MAXIMUM OPERATING ALTITUDE.

a. Explanation. This rule requires that the maximum altitude for operation of the rotorcraft must be established as an operating limitation. The rule is intended to establish en route altitude as an operating limit. The requirements for maximum takeoff and landing altitude are contained in other portions of the rule. (See discussion in paragraph AC 29.151a(2)(ii).) The en route limit may be established by any of the preceding subparts of the rule involving flight, structural, powerplant, equipment or related functional requirements of those subparts. Maximum operating altitude is ordinarily specified initially by the manufacturer and substantiated throughout the type certification program by each engineering discipline. Maximum operating altitude must be established in terms of pressure altitude unless the pilot is provided with some equally functional means of observing specified altitude limits (e.g., a density altitude

indicator if maximum altitude is specified in terms of density altitude). A related requirement in § 29.1583 specifies that maximum operating altitude must be established as an operating limitation in the Rotorcraft Flight Manual and further that any limiting factors must be identified and explained.

b. Procedures. Each FAA/AUTHORITY engineering discipline must assure that data and testing are adequate to properly substantiate and qualify all critical components to the maximum operating altitude of the rotorcraft. The design or maximum substantiated altitude should be specified in the Type Inspection Authorization. The flight test program must include at least one test flight to the maximum approved altitude and this flight must include functional testing of all critical aircraft components. Due to specific requirements in § 29.21(b), no extrapolation of these results is allowed.

AC 29.1529. § 29.1529 (Amendment 29-20) INSTRUCTIONS FOR CONTINUED AIRWORTHINESS (MAINTENANCE MANUAL).

a. Explanation. The FAA/AUTHORITY has long recognized the necessity to have a maintenance manual for rotorcraft due to the unique and generally complicated and critical design features.

(1) Airworthiness Limitations Section.

(i) Amendment 29-4, October 1968, established the requirement for a separate and specific airworthiness limitations section. Section 43.15 was already in place. New § 43.16 was added to the maintenance rules, and § 91.163(c) was added to the operating rules to require compliance with this section of the maintenance manual.

(ii) Amendment 29-20, October 1980, revised the rule and added Appendix A containing requirements for preparation of instructions for continued airworthiness, including the airworthiness limitations section. Instructions for continued airworthiness replaced “rotorcraft maintenance manual” in the standard. The maintenance rules, §§ 43.15 and 43.16, and § 91.163(c) of the operating rules also refer to, or require, compliance with certain parts of the instructions for continued airworthiness. The airworthiness limitations were intended to define the limits of the type certification approval of the fatigue characteristics of “critical flight structure.”

(2) Rotorcraft type designs are unique in comparison to airplane designs in that transmissions and rotors have critical components that may be adversely affected by operating conditions and time in service. The FAA/AUTHORITY-approved airworthiness limitations section may include such items as gear sets, bearings, etc., of the rotorcraft type design if a finite life was established during the type certification program and if the FAA/AUTHORITY determined that mandatory inspections and/or replacement of the component (part) was necessary to maintain airworthiness of the rotorcraft. For example, a drive spline, gear, or bearing was serviceable after

concluding the ground endurance test and/or FAA/AUTHORITY flight test program. However, an FAA/AUTHORITY-mandated inspection or replacement of the component was considered essential for airworthiness of the rotorcraft type design and necessary for type certification. Time between overhaul (TBO) of components is not part of the airworthiness limitations. If an inspection or replacement of a part in an assembly is required, the inspection interval or replacement time and the part number should be included in the limitations. The inspection interval or replacement time may or may not coincide with the recommended overhaul interval of the assembly. (See the comments for Proposal 8-25, § XX.4 in the preamble of Amendment 29-20 (45 FR 60154, September 11, 1980). Note that parts considered unserviceable at the conclusion of the ground endurance test of § 29.923 are not acceptable for type certification.

(3) Certain components must be identified by part number (or equivalent) and serial number (or equivalent). Section 29.1529(a)(1) and (2) of Amendment 29-4 and § 45.14 of Amendment 45-12 list the requirements. The part number of parts and/or components requiring inspections and/or replacement as a result of § 29.571 or other standards must be listed in the airworthiness limitations section of the manual or another separate, segregated section of the manual appropriate to the rules.

(4) Control rigging procedures are included in the manuals. Since rotorcraft are generally difficult to rig properly, it is important that these procedures be correct and complete.

b. Procedures.

(1) General.

(i) The rule of Amendment 29-4 and its predecessor stated that the maintenance manual must contain all information that the applicant considers essential for proper maintenance. Amendment 29-4 also added the requirement for an airworthiness limitations section. Amendment 29-20 revised § 29.1529 and added Appendix A that now contains the requirements for content and preparation of the manual. The airworthiness limitations section of the manual, and any revisions thereto, must be FAA/AUTHORITY approved. The “continued airworthiness” sections which contain the manufacturer’s recommendations for continued airworthiness are not FAA/AUTHORITY approved.

(ii) The airworthiness limitations section contains information derived primarily but not solely from the data approved under § 29.571. Approval of this section of the manual must be completed before type certification. See Part 29, Appendix A, paragraph A29.4 of Amendment 29-20. (For further information, see the comments for Proposal 8-25, § XX.4 in the preamble of Amendment 29-20 (45 FR 60154, September 11, 1980)).

(iii) Part 29, Appendix A, paragraphs A29.3(a) and (b) pertain to the content of the instructions for continued airworthiness. For example, scheduling,

overhauls (including recommended overhaul periods or TBO), inspections, and servicing information are included in this section of the manual.

(2) Identifying and Serializing Fatigue Critical Components.

(i) Part numbers and serial numbers must be applied to fatigue life limited components as noted in §§ 45.14 and 29.1529(a)(1) and (2) of Amendment 29-4. Electric arc marking methods should not be used due to possible internal arcing, pitting of surfaces, and changes in physical or chemical characteristics due to the local high temperature at the arcs.

(ii) Vibrating pencils, name plates, or permanent inks may be used. However, serial numbers should be applied on each part such that material is upset or displaced on the part, thereby attaining a more permanent number. This is not a requirement however. When material is upset or displaced, the least critical or lowest stressed area should be used.

(iii) For small parts, the rule (§ 45.14) allows markings that are equivalent to part and serial numbers. Markings or symbols may be used to enable the identification of a part as one for which a replacement time, inspection interval, or related procedure is specified in the airworthiness limitations section. The FAA/AUTHORITY-stated identification of such small parts is clearly essential for safety and may not be relieved. With adoption of Amendment 29-20, the marking requirements that were contained in § 29.1529 are now contained in § 45.14, Amendment 45-12.

(3) The FAA/AUTHORITY inspector should witness the rigging of the controls of a test rotorcraft. This is imperative for a new rotorcraft design to ensure the practicality and feasibility of the procedures stated in the design data and/or the maintenance manual. The type design data information should be used, and the FAA/AUTHORITY should ensure the manual includes the proper information. Rigging procedures are not included in the airworthiness limitations section.

(4) As a recommendation, a draft copy of the manual should be available to the FAA/AUTHORITY for use during the F&R program if such a program is conducted under § 21.35(b). The manual must be completed and furnished with each aircraft receiving an airworthiness certificate, § 21.50(a) and (b).

(i) For rotorcraft certified to § 29.1529(a)(2) of Amendment 29-4, changes to the airworthiness limitations shall be furnished on request. See § 21.50(a).

(ii) For rotorcraft certified to § 29.1529 of Amendment 29-20, changes to the manual shall be made available to those that need the manual. See § 21.50(b).

(5) Service experience may dictate additional and subsequent (to type certification) changes to the airworthiness limitations section. AD's may be used to

revise the limitations. (The relationship between AD's and the process of changing these limitations is covered in the preamble of Amendment 29-4 (33 FR 14104; September 18, 1968.) Whenever the revised limitations are made restrictive for aircraft in service, the Administrative Procedures Act requires "notice and public procedure" to persons that may be affected and to satisfy the requirement for notification of the changes and identification of the correct issue of the airworthiness limitations, if appropriate. This procedure is also used for restrictive or reduced operation limitations in the RFM.

(6) FAA Order 8620.2, November 2, 1978, Applicability and Enforcement of Manufacturers Data, may be reviewed for further information. This does not reflect the rule changes made in October 1980 but applies to prior standards.

AC 29.1529A. § 29.1529 (Amendment 29-26) INSTRUCTIONS FOR CONTINUED AIRWORTHINESS (MAINTENANCE MANUAL).

a. Explanation. Amendment 91-21, 54 FR 41211, October 5, 1989, recodified certain paragraphs in FAR Part 91. This revision corrects a reference from FAR § 91.163 to FAR § 91.403.

b. Procedures. Correct the references in paragraph AC 29.1529a(1) from §§ 43.15, 43.16, and 91.163(c) to §§ 43.15, 43.16, and 91.403 of the operating rules.

SUBPART G - OPERATING LIMITATIONS AND INFORMATION

MARKINGS AND PLACARDS

AC 29.1541. § 29.1541 MARKINGS AND PLACARDS - GENERAL. (SEE PARAGRAPH AC 29.1543).

AC 29.1543 (AC's 29.1541, 29.1545, & 29.1549). Sections 29.1541, 29.1543, 29.1545, and 29.1549 (Amendment 29-26) INSTRUMENT MARKINGS GENERAL

a. Background and Explanation.

(1) Aircraft instruments have historically been marked in a variety of ways and with an interesting assortment of symbols. During this period, a limited number of regulatory requirements have been incorporated in the FAR 29, Subpart G, “Markings and Placards,” and these efforts have standardized some basic aspects of instrument marking for rotorcraft. As rotorcraft have become increasingly complex with increased number of engines, one-engine inoperative ratings, more sophisticated instrumentation, etc., the need for more specific standards has greatly increased.

(2) It is vitally important that instrument markings be standardized among rotorcraft. When markings are not standardized, considerable confusion and additional workload may be introduced into the cockpit environment. If markings are not standard, it is conceivable that a marking in one rotorcraft could mean the opposite of a similar marking in another rotorcraft. The results of such a situation could be disastrous when pilots fly several rotorcraft models, and particularly in transport rotorcraft under 12,500 pounds, which do not require a pilot type rating.

(3) The following guidance is offered for the purpose of obtaining a general standardization of instrument markings. It is realized that there are a great many variations in instrument presentations for which all guidance may not apply. This is particularly true of new designs, such as cathode ray tube (CRT) displays currently being presented. It is of overriding importance that the philosophies included here be administered, even if specific guidance cannot be applied for particular designs. Instrument markings are provided to aid interpretation of instruments quickly and accurately. Good instrument markings should indicate operating conditions at a glance. The best markings are ordinarily the simplest markings.

b. Procedures.

(1) Limits. Each maximum allowable limit substantiated for safe operation must be marked with a red line. This marking should be a red radial line for circular gages. If there is a minimum allowable limit for safe operation, this value should also be marked with a red (radial) line. The use of multiple red (radial) lines should be avoided except where their use is readily usable by the pilot. Normally, no more than one maximum and one minimum red radial line should be incorporated on any one

instrument to minimize confusion and avoid potential aircrew errors; however, use of multiple red radial lines may be permitted if such marking can be presented in an acceptable manner.

(2) Normal Operating Range. Each normal operating range should be marked with a green arc or green line which does not extend beyond the maximum and minimum values for continuous safe operation. Discontinuities in width have been used when normal ranges vary with other parameters. Integrating instruments in place of these markings should be encouraged although there may be no regulatory requirement for them.

(3) Cautionary Ranges. Time limited ranges, precautionary ranges, or ranges for which special operating procedures are required should be marked with a yellow arc or yellow line. If a yellow range is used to indicate a special operating procedure, information describing the special procedure should be included in the Rotorcraft Flight Manual.

(4) One-Engine-Inoperative Markings. One-engine-inoperative (OEI) ratings represent a special challenge for retaining simplicity and clarity in powerplant instrument markings. OEI ratings are eligible to be used only during an extremely small portion of total flight time; therefore, they should not dominate the presentation or obscure other markings. They are needed only for reference. Indices for 2½-minute and 30-minute power may be marked above the takeoff power redline on engine power instruments. OEI reference markings should be clearly distinct from the normal all-engines operating markings. One acceptable means of marking OEI limits has been narrow dashed radials with yellow for 30-minute, and red for 2½-minute limits. OEI markings should be consistent between gages. For example, a 30-minute marking on an N_1 or torque gage should be similar in appearance to the 30-minute marking on the engine temperature gage.

(5) Red Arcs or Ranges. Sections 29.1549(d) and 29.1553 allow the use of red arcs. Experience has proven that when red arcs are used to indicate maximum or minimum values, the meaning of a red line loses its significance. Therefore, the use of red ranges or arcs to indicate limit values should be discouraged. Red is conventionally used to represent a limit (maximum or minimum) for which an aircraft or component has been substantiated. A “range” of limits for a given parameter is not consistent with the definition of the terms “limit,” “minimum,” or “maximum.” In addition, a red arc tends to imply that more than one value is limiting, that a scale is provided to show operation within a range of values, and that an absolute limit may not exist until the extreme of a red range is attained. These implications must be avoided wherever possible by specifying a single limiting value and marking it with a single red line (radial). If readings in excess of that value were indicated, it would then be obvious to the crew that a limit had been exceeded. A red arc may be used to indicate a transient vibration range as indicated in § 29.1549(d); however, if the range is a cautionary range and not a prohibited range, use of a yellow arc is recommended. The fuel gage configuration described in § 29.1553 is considered a special application of red arcs. Occasionally a

red arc has been utilized when limits vary with other parameters. Discontinuities in width could conceivably represent limits when other parameters are considered. The use of integrating instruments would alleviate much of the problem and should be encouraged although it is recognized that there may be no regulatory requirement for them.

(6) Flight Evaluation. In evaluating gage markings, the final criterion must be, “Are the markings adequate for correct interpretation by the crew?” FAA/AUTHORITY evaluations of gage markings should begin early in a certification program utilizing a cockpit or aircraft mock-up whenever possible. All required gages and gage markings must be readable from each pilot station. Depending on cockpit and window geometry, gages should be evaluated in direct sunlight unless they are located high on the panel underneath a substantial glare shield. Evaluation in direct sunlight is especially important for any displays using light bars of digital lighting segments, such as digital radar altimeter presentations or vertical scale instruments using light segments. Required gages must be readable without upper body movement or extensive head movement by the crew. Evaluators should be especially alert to any scale markings or range markings which are obscured by parallax, as such features are unacceptable. If the aircraft is to be approved for night operation, each required indicator must also be evaluated during night lighting conditions. The same visibility requirements apply for night; however, the evaluator should particularly look for lighting features which may change or obscure the colored markings. For example, in one case, red gage markings were totally obscured by red instrument lighting. Except for minor changes, lighting should be evaluated in flight in order to correctly evaluate vibration effects and various background lighting conditions.

(7) Digital Instruments.

(i) For purposes of this discussion, two types of digital indicator are considered: (1) an indicator which consists of a column of light segments which illuminate sequentially to display changing values, and (2) an indicator which consists of horizontal and vertical line segments in the configuration of a block “8” to display numerical values. Both indicator types work well for parameters where trend information is generally not needed such as engine oil pressure or temperature. However, for rapidly changing parameters such as engine exhaust gas temperature, torque, or RPM, trend information may not be attainable. Advisory Circular 20-88 (guidelines on the marking of power plant instruments) specifies that instrument markings are intended to provide necessary information at a glance. Trend information for power indicators is vitally important for safe operation of a rotorcraft, and this information must be obtainable at a glance. For the columnar light segments, the ability to quickly detect trend information is largely a function of the resolution provided by single segments (e.g.; if there are two segments for each percent RPM, the ability to detect trend information is better than if there is only one segment for each percent RPM). For digital indicators displaying numerical values, trend information may be unattainable because rapidly changing parameters produce a blur, and this design may be unsuitable as a single source of information. The evaluator should use a great deal

of caution to assure adequate trend information is available in primary power and rotor indicators of digital design.

(ii) Another area of concern in digital and moving tape instruments is the ability to determine when limits are being approached. Color code markings are frequently incorporated on the moving face of a tape or digital presentation. In such cases, it is mandatory that limit markings be affixed adjacent to the presentation, or that another means be provided so that the pilot can anticipate approaching a limit. The beginning and end of normal and cautionary ranges should be marked adjacent to the display. The entire range need not be color coded adjacent to the display if the colors are integral on the face of the tape or in the individual digital segments. Marking of limit values solely on the tape or in the colored light segments alone is unsatisfactory. Marking of digital indicators displaying numerical values is adequately addressed in AC 20-88, paragraph 3, General.

(iii) Appropriate failure modes should be evaluated during the system analysis. This will ordinarily include portions of the digital display. Such failures should be detectable whenever they affect reading accuracy. As a result of this analysis, the system may incorporate a test feature which assures all digital segments operate satisfactorily. This feature should be encouraged.

(8) Additional Markings. To keep markings standardized and uncomplicated, only the FAA/AUTHORITY-approved ranges and limits should be included. Items such as manufacturer's recommended values or manufacturer's warranty information are inappropriate for instrument markings and should not be included. Such information may be presented elsewhere. Transient limits may be indicated by a small red index such as a dot or triangle. Information defining allowable conditions for each transient index should be in the rotorcraft flight manual (e.g., maximum for starting, 12 seconds).

(9) Airspeed Indicator. While the foregoing information is generally applicable to airspeed indicators, some particular features warrant additional attention.

(i) A red cross-hatched radial line should be located at power-off V_{NE} if that value is less than power-on V_{NE}.

(ii) Many rotorcraft have erratic, unreliable, or nonrepeatable airspeed indications at low speed which warrant caution when operating in that speed range. In such cases, a yellow arc on the instrument with appropriate flight manual explanation has been found acceptable.

(iii) Indicated airspeed values should be utilized for all airspeed indicator markings.

(iv) Airspeed "bugs" may be used to highlight important takeoff, landing, or limit speeds. This concept may generally be encouraged; however, there are a maximum number of "bugs" that can be utilized without confusion for any given

indicator. Typically, two “bugs” are acceptable; three or more are questionable. “Bugs” may also be used on a variety of instruments other than the airspeed indicator.

(10) Additional Reference Material. Additional procedures for marking powerplant instruments are contained in Advisory Circular 20-88. Where conflicts for rotorcraft exist between AC 20-88 and this document, the more recently dated publication should be utilized.

AC 29.1545. § 29.1545 (Amendment 29-17) AIRSPEED INDICATOR. (SEE PARAGRAPH AC 29.1543).

AC 29.1547. § 29.1547 MAGNETIC DIRECTION INDICATOR.

a. Explanation. This regulation identifies the requirement for a calibration placard for the magnetic direction indicator and where it should be located.

b. Procedures. One means of accomplishing the requirements of this regulation is commonly known as swinging the compass. A surveyed compass rose is laid out on an appropriate surface. The compass rose location should be free from the influence of steel structures, underground pipes and cables, reinforced concrete, and other aircraft. The aircraft should be in an attitude which permits an accurate result. Normally the engines are in operation; however, if the rotorcraft is equipped with an auxiliary power unit which can supply all required electrical power, this can be used in lieu of engine driven generators. Turn the aircraft on successive headings through 360°. It is recommended that the increments be every 30°; however, the increments should not exceed 45°. Prepare a placard to show the correction to be applied at each of the selected headings. When significant errors are introduced by operation of electrical/electronics equipment or systems, the placard should also be marked at each calibration heading showing the correction to be applied when such equipment or systems are turned on or energized. The placard resulting from this calibration should be installed on or near the magnetic direction indicator.

AC 29.1549. § 29.1549 (Amendment 29-34) POWERPLANT INSTRUMENTS.

a. Explanation. Amendment 29-34 introduces the optional ratings of 30-second/2-minute OEI. Section 29.1549(e) has been revised to show that the limits for the 30-second OEI rating are not required to be marked. Use of the 30-second OEI rating is limited to critical phases of operation after a failure or precautionary shutdown of an engine. During this critical stage of operation the crew should not be required to monitor engine instruments to avoid exceedances. Automatic control of the 30-second OEI limits are required by Section 29.1143(e), therefore the 30-second OEI limits are not required to be marked.

b. Procedures. The method of compliance is unchanged except the marking of 30-second OEI limits is unnecessary.

AC 29.1551. § 29.1551 OIL QUANTITY INDICATORS.

a. Background. This section states that each oil quantity indicator must be marked with enough increments to indicate oil quantity readily and accurately.

b. Procedures. There are several different ways in which the oil quantity indicator may be presented. Some of the ones more prevalent in the industry are:

(1) Oil quantity indicator. (Generally used when large amounts of reserve oil are required.)

(2) Oil quantity dip stick. (Most common method of measuring engine oil.)

(3) Oil quantity sight indicator. (Generally used for measuring transmission and gearbox oil quantities.)

c. No matter what method of oil quantity indicator is used, the indicator should be marked so that the oil quantity can be accurately determined. This can range from increments marked in gallons, such as oil quantity indicators for large amounts of oil, to oil quantity indicators marked in quarts with full and add marks, such as engine dip sticks. Sight indicators with full and add marks have been used successfully for gearboxes. Sight indicators normally do not reflect quantities. These are some of the methods currently in use to indicate the oil quantity. In all cases, those methods identified above have proved to be an acceptable method of showing compliance with § 29.1551.

AC 29.1553. § 29.1553 FUEL QUANTITY INDICATOR.

a. Explanation. This section describes the markings necessary to identify the portion of unusable fuel that cannot be used in level flight. Unusable fuel may be present in a design due to the relative configuration of the fuel tank to the fuel tank outlet (e.g., sumps, unusual elevations and/or configurations dictated by aircraft contours, etc.). If the unusable fuel supply for any tank is less than or equal to 1 gallon or is less than or equal to 5 percent of the tank capacity, whichever is greater, this section does not apply.

b. Procedures. For each fuel tank which has an unusable fuel capacity exceeding 1 gallon or 5 percent of the tank capacity, whichever is greater, the following should be accomplished:

(1) Calibration computations, measurements, and/or tests should determine the zero (empty) position on the fuel quantity indicator (reference § 29.1337).

(2) The lowest reading obtainable in level flight must be determined by computation, measurement, and/or testing.

(3) Once the instrument readings defined by paragraphs b(1) and (2) above have been determined, a red arc should be placed between the readings on the fuel quantity indicator.

(4) Appropriate notations should be made in the flight manual to define the intent of the red arc to the flightcrew (reference § 29.1585(e)).

AC 29.1555. § 29.1555 (Amendment 29-24) CONTROL MARKINGS.

a. Explanation. Section 29.1301(b) requires that all installed equipment be labeled to identify its function and operation. This section provides more detailed requirements for control markings. Specific criteria are given for powerplant fuel controls, fuel quantity markings, and landing gear controls. The requirement to color emergency controls red is in this section.

b. Procedures.

(1) Section 29.1555(a) requires that each cockpit control, other than flight controls whose function is not obvious, must be appropriately labeled. The primary flight controls are the cyclic, collective, and the directional control (tail rotor) pedals. For the control to be appropriately labeled, the rule requires that there should be an obvious and clear demarcation of the function and operation of the control. When performing the evaluation to determine the adequacy of markings, it should be remembered that only those controls which are quite traditional should be judged to be obvious in their operation. An example of this has been the navigation/communication control heads. The more traditional control units had concentric knobs of decreasing size for the selection of frequency. Because this system was so common for such a period of time, the finding was generally made that the function of this control was obvious and thus did not require a specific marking. However, as more current technology digital electronic controls were used, the frequency selectors were judged not to be obvious in their operation, and their function and operation were required to be labeled.

(2) Review design data and available hardware to ensure the powerplant fuel controls are clearly and permanently marked such that:

(i) Selector valve control clearly shows each position for each tank and each crossfeed configuration.

(ii) Tank selection sequences required for safe operation are clearly and permanently marked on or adjacent to the required selector.

(iii) Each control valve is clearly marked to show the position of the controls for each engine on multiengine rotorcraft.

(3) Review design data and available hardware to ensure that usable fuel capacity is clearly marked as follows:

(i) If the fuel system has no selector controls, usable fuel capacity must be shown on the fuel quantity indicator (reference paragraph AC 29.1553).

(ii) If the system has selector controls, the usable fuel capacity at each selector position must be clearly shown near the selector position.

(4) Markings of essential visual position indicators must be obvious and within view of required crewmembers. Landing gear markings normally include indications for down, intermediate/unsafe, and up. Accepted symbology has included arrows for up/down indications, crosshatching for intermediate/unsafe, various combinations of colored lights, and combinations of all of the above. Cockpit presentation is further discussed in paragraph AC 29.729. Emergency controls which should be marked in red include those used for firewall/emergency fuel shutoff, landing gear blowdown/emergency release, fire extinguishers, float activation, cargo hook release and fuel dump. The method of operation of emergency controls must be clearly marked. In the case of switches and buttons, the method of operation is often inherently obvious without dedicated labeling.

(5) The two most obvious means of displaying landing gear operating speed are use of a placard or an appropriate mark in the airspeed indicator.

AC 29.1557. § 29.1557 (Amendment 29-26) MISCELLANEOUS MARKINGS AND PLACARDS.

a. Explanation.

(1) This section specifies the markings and placards associated with baggage, cargo, ballast, seats, fuel, oil, and emergency exits.

(2) The data contained in these markings and placards must conform to the approved type design of the rotorcraft.

b. Procedure.

(1) The placard for baggage and cargo compartment limitations should clearly state all limitations which apply to that compartment. The limitations may apply to what is carried, the dimensions, exact location, and maximum weight allowed. The placard should be located in a place where it cannot be obstructed and is clearly visible before or after opening the compartment. For ballast, the placard should state the type of ballast permitted (lead plate, shot bags, etc.), the exact placement, if applicable, and the maximum allowable weight. If there are other limitations which are applicable to these compartments, they should be clearly stated.

(2) Seats in rotorcraft are designed to meet vertical descent loads which have been established to insure a certain level of occupant survivability in the event of a hard

landing or crash. To meet these load requirements, 170 pounds was established as the minimum occupant design weight. If the seat was designed and certified to an occupant weight lower than 170 pounds, the seat must carry a placard in a conspicuous place, which limits the weight of the seat occupant to the certified weight.

(3) The fuel and oil filler opening markings are self-explanatory.

(4) Emergency exit placards must be so distinctive and clear that they are easily identified and understood under extreme and intense circumstances by individuals who have little or no familiarity with aircraft escape procedures.

AC 29.1559. § 29.1559 (Amendment 29-24) LIMITATIONS PLACARD.

a. Explanation.

(1) The content and location requirements on the placard are specified in the standard. The content and information in the placard has changed significantly as a result of associated and complementary changes in the airworthiness rules and the maintenance and operating rules.

(2) By adoption of FAR Part 29 in 1965, the standard (and its predecessor CAR Part 7) required compliance with the operating limitations in the approved Rotorcraft Flight Manual.

(3) With the adoption of an Airworthiness Limitations Section for the maintenance manual as stated in § 29.1529 of Amendment 29-4, the content of the placard was changed significantly to require compliance with the requirements in that section.

(4) Amendment 29-20, issued in 1980, adopted standards requiring "Instructions for Continued Airworthiness" (maintenance manual). This manual may include an Airworthiness Limitations section which is segregated and an approved part of the manual. The maintenance and operating rules, §§ 43.16, 91.163(c), and other operating rules require compliance with the Airworthiness Limitations Section. Other airworthiness standards were adopted for airplanes, engines, and propellers to similarly require Instructions for Continued Airworthiness and an Airworthiness Limitations Section. See paragraph AC 29.1529 for further information. The limitations placard standard was not changed by this amendment.

(5) Amendment 29-24 adopted a significant change for the placard. The placard must be in clear view of the pilot and must provide a convenient cockpit presentation of the approved types of operation for each aircraft. Other operating and maintenance rules referenced in the previous paragraph provided the basis for much of the change in the placard content.

b. Procedures.

(1) A placard (or durable decal) must be legible to the pilot and located in clear view of the pilot. If two pilots are required, a single placard may satisfy the standard. This aspect will be evaluated by a test pilot. The type inspection report (TIR) should contain a compliance check entry.

(2) The placard must specify the kinds of operations such as VFR, IFR, day, night, or icing for which the particular rotorcraft is equipped and approved if Amendment 29-24 applies.

(3) The placard content for older designs is related to the rotorcraft certification basis. If the rotorcraft type design has an “FAA/AUTHORITY-approved” and segregated Airworthiness Limitations Section of the maintenance manual, the limitations placard may be revised to comply with the new standard. The certification basis should be changed in conjunction with the placard change.

AC 29.1561. § 29.1561 SAFETY EQUIPMENT.

a. Explanation. This standard requires an identification or location marking for each item of safety equipment and operating information for crew-operated controls. Markings and placards must be conspicuous and durable per § 29.1541. Both passengers and crew should be able to identify easily and then use the safety equipment. Liferafts are specifically mentioned.

b. Procedures.

(1) Release devices such as levers or latch handles for life rafts and other safety equipment should be plainly marked. The method of operation should be marked also. Stencils, permanent decals, placards, or other permanent labels or instructions may be used.

(2) Lockers, compartments, or pouches used to contain safety equipment such as life vests, etc., should be marked to identify the equipment therein and to also identify, if not obvious, the method or means of getting to or releasing the equipment.

(3) Safety equipment labels and instructions for use or operation should be used as prescribed. Section 29.1555(d)(2) concerns emergency control markings. White letters and red background (or reverse) shall be used. Section 29.1541 concerns markings also.

(4) Locating signs for safety equipment should be legible in daylight from the furthest seated point in the cabin or recognizable from a distance equal to the width of the cabin. Letters, 1 inch high, should be acceptable. Operating instructions should be legible from a distance of 30 inches. These are recommendations based on § 29.811(b) and (e)(1).

(5) As prescribed, each liferaft must have operating instructions.

(6) Easily recognized or identified and easily accessible safety equipment located in view of the occupants may not require locating signs, stencils, or decals. However, operating instructions are required. A passenger compartment fire extinguisher that is in view of the passengers is an example.

AC 29.1565. § 29.1565 (Amendment 29-3) TAIL ROTOR.

a. Explanation.

(1) This standard concerns tail rotor disc visibility in normal daylight ground conditions. Amendment 29-3 added “daylight” to the standard. A personnel guard is not required. The tail rotor shall be marked to achieve a conspicuous disc whenever the blades are rotating.

(2) Completely shrouded or protected blades may not require contrasting color segments if the shroud provides equivalent protection for personnel on the ground. A simple tubular guard does not alleviate this standard.

b. Procedures.

(1) Each tail rotor blade may be marked with contrasting colors.

(2) During FAA/AUTHORITY compliance inspections or during the flight test program, the tail rotor will be evaluated, qualitatively, in daylight for a conspicuous disc.

(3) As an aid to select proper colors for conspicuousness, see AC 20-47, Exterior Colored Band around Exits on Transport Airplanes. This AC concerns, in part, methods for measuring reflectance (3:1 factor) and contrast colors for transport aircraft. Section 29.811(f)(2) requires contrast colors for exit markings. The AC also contains suggestions for chromatic contrast. A 3:1 reflectance factor between rotor blade segment colors is acceptable. It is recommended that a few combinations of colors be approved to provide a selection of color combinations. The type design drawings will include the necessary information and data for design control.

(4) As a further aid for compliance AC 91-42D, Hazards of Rotating Propeller and Helicopter Rotor Blades, dated March 3, 1983, should be reviewed. Revision D updates statistical information on propeller and rotor-to-person accidents and offers suggestions to reduce the frequency of such accidents. This AC, in part, refers to FAA Report FAA-AM-78-29, Conspicuity Assessment of Selected Propeller and Tail Rotor Paint Schemes, dated August 1978. The report’s abstract states, in part, for two tail rotor designs, a black and white asymmetrical stripe scheme was chosen as “more conspicuous” than a red, white, and black design.

SUBPART G - OPERATING LIMITATIONS AND INFORMATION

ROTORCRAFT FLIGHT MANUAL

AC 29.1581. § 29.1581 (Amendment 29-15) ROTORCRAFT FLIGHT MANUAL - GENERAL.

a. Explanation.

(1) The primary purpose of the Rotorcraft Flight Manual (RFM) is to provide an authoritative source of information considered to be necessary for or likely to promote safe operation of the rotorcraft.

(2) Since the flightcrew is most directly concerned with operation of the rotorcraft, the language and presentation of the flight manual shall be directed principally to the needs and convenience of the flightcrew, but should not ignore the needs of other contributors to safe operation. As used with respect to the RFM, safe operation is construed to include, but not be limited to, operation of the rotorcraft in the manner that is mandatory for, or recommended for, compliance with applicable airworthiness requirements, and with the particular provisions of the operating regulations relating to the rotorcraft's approved performance capabilities.

(3) To serve its intended purpose, therefore, the RFM must include the certificate limitations established for the design as a consequence to the type certification evaluation, the performance information necessary to establish the operating limitations imposed in accordance with appropriate operating regulations, and the procedures and other information necessary to enable the flightcrew to safely operate the rotorcraft within the envelope of limitations thus delineated. The outline presented in this circular is directed toward those objectives.

(4) Information and data that are mandatory for an acceptable RFM are prescribed in §§ 29.1581 through 29.1589, and nothing contained in these sections should be construed as amending those requirements. Certain additional elements of flight manuals, however, have been shown by experience to be practical necessities if the document is to serve effectively its intended purpose.

b. Procedures.

(1) The following criteria do not affect the status of RFMs which are presently approved. When such manuals are amended in the future, however, it is recommended that the concepts of this section be incorporated wherever uniformity or clarity will result.

(2) Only the material required by FAR Part 29, or that considered necessary to implement the operating regulation, should be included in the portion of the manual that is approved by the FAA/AUTHORITY. However, the manufacturer or operator may

include other “unapproved” data in a separate and distinctively identified portion within the same document.

The RFM is considered necessary for safe operation of the rotorcraft and care should be taken to produce a manual that is consistent with the need for completeness and clarity of the required information. Also, since the RFM is necessary for operation of the rotorcraft in accordance with the certificate limitations, it is considered to be public information.

(3) The page size for the RFM will be left to the discretion of the manufacturer. In this regard, operational compliance with § 91.31 should be considered. A cover should be provided and should indicate the nature of the contents by means of the title, “RFM.” Each page of the approved portion should bear the notation “FAA/AUTHORITY approved,” an induction of the approval sequence of that particular page (e.g., a date of approval, a revision number suitably supported by an amendment log which contains the appropriate date, etc.), the rotorcraft model number as it appears on the type data sheet, and any appropriate document identification number. Pages of the unapproved portion of the flight manual would use the issue date in lieu of the FAA/AUTHORITY approved date. The material should be bound in semipermanent fashion so that the pages will be protected and retained in proper sequence. In selecting the form of binding, consideration should be given to the necessity for amendment and the ease with which amendments can be accomplished.

(4) Amendments may take the form of revisions or supplements.

(i) A revision is a change to the RFM or its supplement made by the holder of the applicable type certificate (TC) or in the case of supplement prepared as a part of a supplemental type certificate (STC), by the holder of the STC.

(ii) A supplement is an addition to the RFM. If the rotorcraft manufacturer (holder of the TC) adds optional equipment or specific operations (such as Category ”A” vertical operation or IFR operations), then the rotorcraft manufacturer is responsible for preparing any necessary flight manual material whether he elects it to be a supplement or a revision to the basic manual. If someone other than the rotorcraft manufacturer applies for an STC to install equipment or modify the rotorcraft such that a RFM supplement is necessary, then the person who applies for the STC is responsible for the preparation of the RFM supplement.

(5) “Revision” may be incorporated by inserting new pages which embody the amended text and, where applicable, by removing superseded pages. A vertical amendment bar should be inserted in the outer margin, where practicable, to indicate those parts of the text that have been changed. Each amended page should be identified in the same manner as pages of the basic manual, and in addition should carry an identification of its approval sequence.

(6) Supplements are incorporated in the manual by inserting the applicable pages which contain the information associated with the particular change. Each supplemental page should also identify the rotorcraft type and model flight manual for which the supplement was issued, the name of the issuer, and the FAA/AUTHORITY approval date. The following statement is an example of a note which would be included on the title page of a flight manual supplement: "For rotorcraft approved to operate in accordance with the provisions of the rotorcraft flight manual supplement, the information contained herein supplements the information of the basic flight manual. For limitations, procedures, and performance data not contained in this supplement, consult the basic flight manual."

(7) Supplements should contain as much of the flight manual contents outlined below as considered appropriate for the particular change in type design, including title page and index of contents. It is suggested that these be prepared with a view to insertion in the FAA/AUTHORITY-approved portion of the flight manual as a complete and self-contained unit.

(8) The RFM should contain as much of the information required in Part 29 as is applicable to the individual type and model. For the purpose of standardization, it is recommended that the sequence of sections and of items within sections, follow the format presented at the end of this paragraph if practicable.

(9) The following information would normally be included in the introduction section of the flight manual.

(i) Title Page. This page should include the manufacturer's name and address and the rotorcraft model number as it appears on the type certificate data sheet. If desired, include a trade name or trade model number in quotes, provisions for rotorcraft serial number and registration number, approval date of the basic document, and title and signature of the FAA/AUTHORITY approving official.

(ii) Table of Contents. An index should be located at the front of each section or at the front part of the manual.

(iii) Amendment Log. This log should be in the form of a table with provisions to record, for each amendment, an identifying number, title or description, the page numbers involved, the issue date, the identification of the FAA/AUTHORITY approving official, and the FAA/AUTHORITY approval date.

(iv) Separate amendment logs should be provided for each type of amendment issued; i.e., Log of Revisions, Log of Supplements, etc. Amendments issued by other than the holder of the basic type certificate should include a separate amendment log which, in addition to the issue date, should also identify the issuer and the STC number or other approval basis for the associated modification.

(v) List of Current Pages. This table should list, for each approved page of the manual, the issue date and any other appropriate identification necessary to establish that the manual is complete and current.

(10) The following flight manual format would be acceptable. The format recommends a sequence of sections and suggests items which would be included in those sections.

FLIGHT MANUAL FORMAT

INTRODUCTION

PART I, FAA/AUTHORITY APPROVED

Section 1 Limitations

Section 2 Normal Procedures

Section 3 Emergency Malfunction Procedures

Section 4 Performance Data

Section 5 Optional Equipment Supplements

PART II, MANUFACTURER'S DATA

Section 6 Weight and Balance

Section 7 Systems Description

Section 8 Handling, Servicing, and Maintenance

Section 9 Supplemental Performance Information

INTRODUCTION: This section would include any signature pages, list of approved pages, the log of revisions, and any additional introductory information desired. For each section, it is suggested that the following major titles be utilized and that the recommended information listed under each title be incorporated. Each section should include a table of contents and a list of figures applicable to that particular section.

Section 1 - Limitations:

a. Kinds of Operation.

Under this heading, crew requirements, VFR and/or IFR flight authorizations, and any operational restrictions would be presented.

b. Flight Limitations.

This section would include limitations with respect to airspeed, altitude, ambient temperatures, wind, slope, prohibited maneuvers, and any other flight limitations associated with a particular rotorcraft (i.e., HV limitations for Part 29 Category A rotorcraft).

c. Weight Limitations.

This section would contain all gross weight, center of gravity (both longitudinal and lateral) limitations, and any other weight limitations unique to the rotorcraft (i.e., crew, passenger and/or cargo loadings, WAT limitations for Part 29 rotorcraft, etc.).

d. Powerplant Limitations.

This section would include the temperature and pressure limits associated with powerplant operation; i.e., torque, RPM, turbine outlet temperature (TOT), etc. This section would also include approved fuels and oils and their temperature and pressure limits. Any accessories attached to the powerplant (i.e., starters, generators, etc.), to which limitations in starting or operation are applicable, would be included herein.

e. Rotor Limitations.

This would include the power-on and power-off RPM limits, the effect of altitude on these parameters, and any other limitations associated with the rotor system(s).

f. Drive System Limitations.

This section would include all limitations associated with the drive system (i.e., main transmission, any adapter gear boxes, tail rotor gearbox, and any other drive system component applicable to a particular rotorcraft).

g. System Limitations.

This section would include any particular system limitations unique to the rotorcraft (i.e., battery limitations, hydraulic system limitations, and any limitations associated with the various types of stability augmentation and/or automatic flight control systems).

h. Instrument Markings.

All instrument markings would appear in this section. The significance of each limitation and of the color coding would be explained in this paragraph.

i. Placards.

The exact wording and general location of all placards pertaining to flightcrew function or cargo loading would appear in this section.

Section 2 - Normal Procedures:

a. Preflight Checks.

This paragraph would include any exterior, interior, and any system checks prior to starting the engine(s).

b. Engine Start.

This paragraph would include any procedures associated with the engine start(s).

c. System Checks.

This paragraph would include any system check procedures such as hydraulic, stability augmentation, electrical, flight control, etc., which should be accomplished prior to takeoff.

d. Takeoff.

This paragraph would include any procedures associated with the takeoff and any procedures unique or applicable to the takeoff profile.

e. Cruise and/or Level Flight.

This paragraph would include any procedures applicable to cruise and/or level flight operation.

f. Approach and Landing.

This paragraph would include any procedures required or recommended for the approach and landing duration of the rotorcraft operation.

g. Engine/Rotor Shutdown.

This paragraph would include any procedures applicable to the engine and/or rotor shutdown and any procedures applicable upon completion of the rotorcraft operation.

h. Miscellaneous Procedures.

This section would include procedures for miscellaneous systems or conditions, such as bleed air heater, anti-ice systems, cold weather operations, etc.

Section 3 - Emergency and Malfunction Procedures:

a. Introduction.

This paragraph would include any introductory type information (i.e., definitions of terms used and any other information the manufacturer deemed appropriate).

b. Powerplant Failures.

This paragraph would include any information relative to engine, fuel control, or any other powerplant related emergency or malfunction.

c. Drive System Failures.

This paragraph would include recommendations and procedures relative to any drive system failure and/or malfunction.

d. System Failures.

This paragraph would include procedures and recommendations relative to any system failure and/or malfunction (i.e., electrical, hydraulic, and augmented flight control systems).

e. Fire.

This paragraph would include procedures to be followed in the event that engine, cabin, baggage compartment fire or smoke is detected.

f. Emergency Egress.

This paragraph would include emergency evacuation procedures for both the flightcrew and the passengers.

Section 4 - Performance Data:

a. Power Assurance.

This section would include all information relative to the power assurance checks.

b. Hover Information.

This paragraph would include all information relative to hover performance (i.e., hover ceiling in ground effect (IGE) and out of ground effect (OGE) for single and/or multiengine operation). Any relative wind effects would also be included.

c. Takeoff and Landing and Climb Performance.

This paragraph would include information relative to the takeoff and landing profiles (i.e., height-velocity (HV) curves, normal climbs, autorotation speeds, takeoff and landing distance over 50-foot obstacles, and any other data applicable to the particular rotorcraft).

d. Airspeed Calibration.

This paragraph would include the airspeed calibrations required for the particular rotorcraft.

Section 5 - Optional Equipment Supplements:

This section would include all optional equipment supplements. These supplements may modify any of the limitations, procedures (both normal and emergency), and performance characteristics of the basic rotorcraft.

PART II, Manufacturer's Data (Not FAA/AUTHORITY Approved)

Section 6 - Weight and Balance:

All supplemental weight and balance information such as crew tables, passenger tables, fuel and oil tables, cargo tables, and any other loading tables applicable to the particular rotorcraft would appear in this section.

Section 7 - Systems Description:

This section would include all information relative to the various rotorcraft systems that the manufacturer believes would apply to the particular rotorcraft.

Section 8 - Handling, Servicing, and Maintenance:

This section would include all information relative to the handling, servicing, and maintenance that the manufacturer would care to present. This section would also include dimensions (i.e., baggage areas, doors, and any internal, external information appropriate to the rotorcraft).

Section 9 - Supplemental Performance Information:

This section would include any supplemental performance information the manufacturer would wish to provide. This section would also contain the cruise-range information associated with IFR operation.

AC 29.1583. § 29.1583 (Amendment 29-24) OPERATING LIMITATIONS.

a. Explanation. The purpose of this section is to present the limitations applicable to the rotorcraft type and model as established in the course of the type certification process. The limitations should be presented without explanations other than those explanations prescribed in Part 29. To the maximum practicable extent, the limitations should be presented in “operations” language and format. Since operation of the rotorcraft in accordance with such limitations is required by the operating regulations, the following should be inserted as a note at the beginning of this section: “Operation in compliance with the limitations presented in this section is required by the Federal Aviation Regulations.” Section 29.1583 merely states that certain information must be given. The specific information is found during the showing of compliance with other paragraphs in the regulation.

b. Procedures.

(1) Section 29.1545 gives the markings required for the airspeed indicator.

(2) Rotor limits are established during compliance with § 29.33. The markings are specified in § 29.1549.

(3) Powerplant limits are discussed under §§ 29.1549 through 29.1553.

(4) Weight limitations are specified in § 29.25. In the operating limitations section, there should be a statement of the maximum and minimum certificated takeoff and landing weights. For those weight limitations that vary with altitude, temperature, or other variables, the variation in weights may be given in the form of graphs in the performance section of the manual and included as a limitation by specific reference in the limitations section to the appropriate graph or page.

(5) Center of gravity (CG) limits are determined in accordance with § 29.27 and may be presented in the same manner as prescribed for the weight limitations (i.e., a statement under “center of gravity limits” in the limitations section which references

graphs or page numbers in the performance section). If landing gear position can measurably affect allowable CG, this information should be presented together with the moment change due to gear retraction.

(6) The minimum flightcrew is determined under § 29.1523 and is dependent upon the kinds of operation authorized. The established number and identity, by crew position of the minimum flightcrew, must be listed.

(7) Kinds of operations are established under § 29.1525. This section should contain the following preamble: "This rotorcraft is certified in the Transport Category (A and/or B) and is eligible for the following kinds of operation when the appropriate instruments and equipment required by the airworthiness and/or operating rules are installed and approved and are in operable condition." Those of the following, and any others that are applicable, should be listed.

(i) Day and night VFR.

(ii) Approved to operate in known icing conditions.

(iii) IFR.

(iv) Category A vertical operations from ground level or elevated heliports.

(v) Extended overwater operations (ditching).

(vi) External load operation.

(8) Limiting heights and speeds are determined in accordance with § 29.79 and established as operating limitations in accordance with § 29.1517.

(i) For transport Category A rotorcraft, § 29.1583(f) requires that enough information be furnished in the limitations section of the RFM to allow compliance with the requirements of § 29.1517. One method of complying with this requirement is to provide charts or graphs similar to those shown in figures AC 29.79-1 and AC 29.79-2 as required to encompass the approved takeoff and landing envelope of the rotorcraft. However, many Category A approvals have not required an actual HV diagram to be included in the RFM for Category A operations. The Category A takeoff and landing profiles are developed so that a continued takeoff, go-around, or safe landing can be accomplished following failure of the critical engine at any point in the profile. Development of the Category A profiles is very similar to HV testing. The resulting takeoff and landing profiles coupled with precisely defined procedures and the weight, altitude, and temperature (WAT) limitations for which the profiles have been shown to be valid constitute an operating envelope for which compliance with § 29.1517 has been demonstrated. During the Category A flight test evaluation, abuse testing is done to verify that variations reasonably expected to occur in service will not result in a hazardous condition from which a safe landing cannot be accomplished. Therefore, if

the Category A takeoff and landing profiles, procedures, and WAT limitations are adequately and clearly defined in the RFM, this information is considered sufficient for compliance with the requirements of § 29.1583(f) without the inclusion of an actual HV diagram. The Category A procedures and profile definitions may be presented in the normal procedures or performance sections of the RFM but should be referenced as being mandatory requirements in the limitations section unless an HV diagram valid for Category A operations is presented.

(ii) For transport Category B rotorcraft, the height-speed information developed in accordance with § 29.79 should be included in the performance section of the RFM in accordance with § 29.1587(b)(6). HV diagrams similar to those shown in figures AC 29.79-1 and AC 29.79-2 have been satisfactory for previous certifications.

(iii) For transport Category B rotorcraft with FAR Part 29 and CAR Part 7 certification bases prior to Amendment 29-21, the HV information should be included in the limitations section of the RFM unless the following procedure has been accomplished for rotorcraft which satisfy the following conditions:

(A) Certificated for a maximum gross weight of 20,000 pounds or less; and

(B) Configured with nine passenger seats or less. RFM's for rotorcraft falling in this group may be revised to remove the HV data from the limitations section and place it in the performance section. Such actions should be processed and approved by a supplemental type certificate (STC). Conditions b(8)(iii)(A) and (B) above should be shown as limitations on the STC, and the certification basis should include Amendment 29-21. If a type certificate (TC) holder desires to revise his type design to take advantage of Amendment 29-21, the certification basis on the TC data sheet should be revised to show §§ 29.1, 29.79, 29.1517, and 29.1587 of Amendment 29-21 for the HV data in the RFM. Foreign manufacturers cannot apply for an STC under current FAA policy. Therefore, a TC amendment would be required for any foreign rotorcraft TC holder to take advantage of this regulatory relief.

(9) Unusable fuel tests are required by § 29.959. When the amount of unusable fuel has been determined, the manufacturer calibrates his fuel quantity system so that when the fuel quantity in the tank is down to the unusable quantity, his fuel gage will read "zero." Additional information may also be provided in the RFM to advise the pilot(s) of different unusable fuel quantities for various flight conditions.

(10) Often other limitations are included in the limitations section that are not specifically mentioned in the rules but which are necessary for safe operation. Examples are:

(i) Altitude limits.

(ii) Ambient temperature limits.

(iii) Conditions for use of rotor brake.

(iv) Prohibitions against prolonged hover in cross or tail winds to prevent accumulation of noxious fumes in cockpit or cabin.

(v) Prohibitions against acrobatic maneuvers.

(vi) Required placards including text and location.

(vii) Special airworthiness equipment installations such as engine out or low rotor RPM warning systems.

AC 29.1583A. § 29.1583 (Amendment 29-24) OPERATING LIMITATIONS.

a. Explanation. Amendment 29-24 to the regulation establishes additional operating limitations for maximum allowable wind for operation near the ground and ambient temperature limits.

b. Procedures. All of the previous advisory material remains applicable except that the minimum and maximum ambient temperature limitations are required in the limitations section. (These limitations were optional before Amendment 29-24.) Additionally, the wind envelope for safe operation near the ground, which is established under § 29.143(c), must be included in the Limitations section. Such operations may include: IGE hover, takeoff, landing, rolling takeoff, rolling landing, and taxi. Advisory material for § 29.143(c) is given in paragraph AC 29.143(a)(2)(ii).

AC 29.1585. § 29.1585 (Amendment 29-24) OPERATING PROCEDURES.

a. Explanation. The procedures sections of the manual should contain essential information peculiar to the particular type or model, the knowledge of which may be expected to enhance safety in the kinds of operations for which the type or model is approved. Information or procedures not directly related to airworthiness, or not under control of the crew, should not be included, nor should any procedure which is accepted as basic airmanship.

(1) Procedures information should be presented with respect to normal and emergency procedures. Alternatively, information outside the category of normal procedures may be subdivided into categories described as “abnormal” procedures and “emergency” procedures, as described herein.

(2) Notes, cautions, and warnings may be used to emphasize specific instructions or information in general accord with the following.

(i) “Note” should be used with respect to matters not directly related to safety but which are particularly important (e.g., Note: For normal twin-engine operation, maximum permissible torque needle split is 4 percent total).

(ii) “Caution” should be used with respect to safety matters of a secondary order not immediately imminent (e.g., Caution: On engine restart reduce inter-turbine temperature (ITT) to 750° C on the operating engine).

(iii) “Warning” should be used with respect to safety matters of a primary order or imminent (e.g., Warning: Do not allow rotor RPM to drop below minimum limits).

(3) The operating procedures of this section have been developed with specific regard for the design features and operating characteristics of the rotorcraft and have been approved by FAA/AUTHORITY for guidance in identifying acceptable procedures for safe operation. Observance of these procedures is not mandatory, and FAA/AUTHORITY approval of such procedures is not intended to prohibit or discourage development and use of improved or equivalent alternate procedures based on operational experience with the rotorcraft. When alternate procedures are used, full responsibility for compliance with applicable airworthiness safety standards rests with the operator.

b. Procedures. Procedural information should be presented in substantial accord with the categories described below:

(1) Normal Procedures. Normal procedures are concerned with peculiarities of the rotorcraft design and operating features encountered in connection with routine operations, including malfunction cases not considered in the other procedures section (i.e., not considered to degrade safety). Material conforming to the above should be presented for each phase of flight, following in sequence from preflight through engine shutdown, and should include, but not be limited to, systems operation (including fuel system information prescribed in § 29.1585(b)), missed approaches, etc.

(2) Abnormal Procedures (Optional). Abnormal procedures are concerned with foreseeable situations, usually entailing a failure condition, in which the use of special systems, and/or the alternate use of regular systems, may be expected to maintain an acceptable level of airworthiness. Typical examples of events considered to entail abnormal procedures are minor engine malfunctions and associated conditions for safe flight, stopping and restarting engines in flight, extending landing gear or flaps by alternate means, approach with inoperative engine(s), etc.

(3) Emergency Procedures. Emergency procedures are concerned with foreseeable but unusual situations in which immediate and precise action by the crew, as detailed in the recommended procedures, may be expected to reduce substantially the risk of disaster. Typical examples of incidents considered to be emergencies are fire, ditching, loss of tail rotor thrust, etc.

(4) Ditching Procedures. Amendment 29-12 added ditching standards to Part 29. When ditching approval is requested, appropriate procedures and information will be included in the manual. Scale model tests are generally used to prove autorotation “ditching” characteristics and to prove stability in the water (capsize threshold) of the rotorcraft type design. Many rotorcraft designs require emergency float bags that deploy either before water contact or shortly after water contact to provide the flotation and stability necessary to comply with the requirements.

(i) Autorotation altitudes and airspeeds and water contact information, if appropriate, derived from or used during the ditching model tests, should be confirmed during FAA/AUTHORITY flight tests and should be included in the manual. Information concerning sea states or wave heights to length ratios, investigated and found satisfactory, may be included in the manual if nonsevere sea states are likely to be exceeded.

(ii) Instructions for deploying life rafts may be needed for certain designs. For example, if life rafts are stowed outside the cabin, special instructions may be necessary.

(5) Evacuation Procedures for Rotorcraft Litter Configurations. Appropriate procedures and minimum crew requirements should be considered and included in the manual or manual supplement, if necessary, to assure timely evacuation.

(6) The use of illustrations to show controls, instruments, explain systems, etc., is encouraged.

AC 29.1587. § 29.1587 (Amendment 29-24) PERFORMANCE INFORMATION.

a. Explanation.

(1) This section should contain the performance information necessary for operation in compliance with applicable performance requirements of Part 29 and applicable special conditions, together with additional information and data essential for implementing pertinent operational requirements.

(2) Performance information and data may be presented for the range of weight, altitude, temperature, and other operational variables stated as operational performance limitations. Performance information which exceeds any operating limitation should be shown only as required for clarity of presentation. If data beyond operating limits are shown, the limits should be clearly marked and the data outside of the limits clearly distinguishable from the data within the limits.

(3) Performance information presented in the unapproved or “manufacturers’ data” section of the RFM should not include performance data that are beyond operating limitations unless the particular operating limit that may be exceeded is

clearly distinguishable from similar performance data that are within limits. For example, if the weight-altitude-temperature (WAT) limits for takeoff and landing are based on in-ground-effect (IGE) hover performance capability at a 5-foot skid height, 3-foot skid height hover performance data allowing increased hovering weights should not be presented in the manufacturers' data unless clearly identified as being beyond operating limitations for normal operations. It is recommended that performance information and data be presented substantially in accordance with the following paragraphs. Where applicable, reference to the appropriate requirement of the certification or operating regulation should be included.

(i) General. Include all descriptive information necessary to identify the configuration and conditions for which the performance data are applicable. Such information may include the complete model designations of rotorcraft and engines, definition of installed rotorcraft features, and equipment that affects performance together with the operative status thereof. This section should also include definitions or terms used in the performance section (i.e., IAS, CAS, ISA, configuration, CDP, V_{TOSS}, Category A, Category B, LDP, etc.) plus calibration data for airspeed, altimeter, ambient air temperature, and other information of a general nature.

(ii) Performance Procedures. The procedures, techniques, and other conditions associated with obtainment of the flight manual performance should be included. The procedures may be presented as a performance subsection or in connection with a particular performance graph. In the latter case, a comprehensive listing of the conditions associated with the particular performance may serve the objective of "procedures" if sufficiently complete. Performance figures are based on the installed minimum specification engine, unless normally depreciated engine performance is approved.

(iii) Wind Accountability. Wind accountability may be utilized for determining takeoff and landing field lengths. This accountability may be up to 100 percent of the minimum wind component along the takeoff or landing path opposite to the direction of takeoff. Wind accountability data presented in the RFM should be labeled "UNFACTORED" (if 100 percent accountability is taken) and should be accompanied by the following note: "Unless otherwise authorized by operating regulations, the pilot is not authorized to credit more than 50 percent of the performance increase resulting from the actual headwind component and must reduce performance by 150 percent of the performance decrement resulting from the actual tail wind component." In some rotorcraft, it may be necessary to discount the beneficial aid to takeoff performance for winds from zero to 10 knots. This should be done if it is evident that the winds from zero to 10 knots have resulted in a significant degradation to the takeoff performance due to flight through the main rotor vortex. Degradation may be determined by determining the power required to fly, by reference to a pace vehicle, at speeds of 10 knots or less.

(iv) The following list is illustrative of the information that should be provided for a transport Category "A" and "B" rotorcraft.

(A) Density altitude chart for converting from pressure to density altitude.

(B) Temperature conversion chart (°C to °F to °C).

(C) Airspeed calibration (calibrated vs. indicated airspeed) for both pilot and copilot systems for level flight, climb, autorotation, and recommended approach rate of descent.

(D) Altimeter correction for pilot and copilot instruments showing the correction factor vs. indicated airspeed at sea level and altitude.

(E) Hover performance charts both in and out-of-ground (OGE) effect with instructions for their use. The OGE hover performance chart is not required but may be useful.

(F) A series of climb performance charts for various weights showing rate of climb vs. pressure altitude for a range of temperatures and showing the variation of best rate of climb speed with pressure altitude. The conditions should appear on each chart (i.e., power, weight, single, or multiengine, etc.). The OEI climb performance charts at 30-minute power and maximum continuous power or at continuous OEI power should provide rate of climb performance down to a minimum of -500 feet/min. The effect of engine air bleed, particle separators or other devices, on the rate of climb/descent performance must be provided.

(G) A chart showing the takeoff flight path for Category A presented in height vs. distance from the hover wheel height to the point at which V_{TOSS} and not less than 35 feet is reached, and the rejected takeoff distance. The chart should identify the critical decision point and V_{TOSS}.

(H) Charts to allow calculation of distance to climb at V_{TOSS} from the point at which V_{TOSS} and not less than 35 feet is reached (or from the lowest point of the takeoff profile for elevated heliport) to 200 feet with one engine inoperative and other engines within approved operating limitations. If conservative, providing charts to allow calculation of the total distance from V_{TOSS} and 35 feet to V_Y and 200 feet is allowed.

(I) A series of charts to allow calculation of any additional distance which may be required to accelerate to best rate of climb speed from V_{TOSS} with one engine inoperative and other engines within approved operating limitations. If conservative, providing charts to allow calculation of the total distance from V_{TOSS} and 35 feet to V_Y and 200 feet is allowed.

(J) Charts to allow calculation of distance to climb at V_Y from 200 feet to 1000 feet above the takeoff surface (or from the lowest point of the takeoff profile for elevated heliport) with one engine inoperative and other engines at 30-minutes OEI

power or maximum continuous OEI power. If conservative, providing charts to allow calculation of the total distance from V_{TOSS} and 35 feet to V_Y and 1000 feet is allowed.

(K) Landing distance chart for Category A showing the landing distance from a 50-foot height (25-foot for VTOL operations from an elevated heliport) to a stop with one engine inoperative vs. pressure altitude over the range of temperatures being certified. This chart should identify the balked landing decision point (LDP) so the pilot will know how to achieve this performance.

(L) For Category B, a series of charts at various weights showing takeoff distance from hover to 50 feet vs. pressure altitude over the range of temperatures being certified.

(M) For Category B, a landing distance chart similar to the one for Category A from a 50-foot height to stop with one engine inoperative.

(N) For turbine-powered rotorcraft in all categories, a power assurance check chart.

(O) For Category B, a statement of the maximum crosswind and downwind components that have been demonstrated as safe for operation near the ground unless this information is incorporated as an operating limitation. (See paragraph AC 29.1583.)

(P) For Category B, the height-velocity (HV) envelope except for rotorcraft which must incorporate the HV diagram as an operating limitation.

(Q) For Category B, the autorotative glide distance as a function of altitude if required by § 29.71. (See paragraph AC 29.71.)

(v) Miscellaneous Performance Data. Any performance information or data not covered in items (A) through (Q) above, but considered necessary to enhance safety or to enable application of the operating regulations, should be included.

AC 29.1587A. <u>§ 29.1587 (Amendment 29-40) PERFORMANCE INFORMATION</u>.

a. <u>Explanation</u>. Amendment 29-40 added a requirement to provide the steady gradient of climb for each weight, altitude, and temperature for which Category A performance is presented. No minimum climb gradient has been required.

b. <u>Procedures</u>. No additional flight testing is required beyond that for compliance with the Category A performance requirements. Climb gradient data should be calculated and presented for all weights, altitudes, and temperatures for which takeoff data is scheduled. Gradients should be established for the first and second segment climb under the conditions specified in § 29.67(a)(1) and (a)(2).

AC 29.1589. § 29.1589 LOADING INFORMATION.

a. Explanation. Control of the rotorcraft weight and balance is an operational function, and is the responsibility of the operator. However, instructions necessary to enable loading of the rotorcraft within the established limits of weight and center of gravity, and to maintain the loading within such limits are required by the operating regulations, and inclusion of such loading instructions in the Rotorcraft Flight Manual is required by § 29.1583(c). Approved loading instructions, therefore, must be presented in the Rotorcraft Flight Manual, and at the option of the applicant, may be included in the approved portion or may be included in the unapproved portion.

b. Procedures.

(1) For the purpose of the flight manual, distinction is made here between the loading instructions required by the certification requirements of Part 29, and the weight and balance data required by the operating requirements. The former prescribed information is applicable to the rotorcraft type, and is subject to FAA/AUTHORITY approval as flight manual material.

(2) For compliance with the noted requirements, it is necessary for the applicant to develop weight and balance data and loading instructions as necessary to satisfy the needs of both certification and operation. In order to consolidate in one document information on rotorcraft loading, however, it is recommended that the weight and balance data be developed to include appropriate loading instructions, and that both be included in the Rotorcraft Flight Manual as an “unapproved” section entitled, “Weight and Balance.” Such a section should include the following statement as a note: “In accordance with FAA/AUTHORITY procedures, the detail weight and balance data of this section are not subject to FAA/AUTHORITY approval. The loading instructions of this section, however, have been approved by FAA/AUTHORITY as satisfying all requirements for instructions on loading of the rotorcraft within approved limits of weight and center of gravity, and on maintaining the loading within such limits.”

(3) An actual or specimen weight and balance section should be included in the initial submittal of the manual. Weight and balance data for each particular rotorcraft need not be submitted as flight manual material.

(4) The weight and balance material outlined below is believed to be adequate for rotorcraft with conventional loading and fuel-management techniques. For rotorcraft which necessitate redistribution of fuel (other than normal consumption) to maintain loading within prescribed limits, the material should be amplified as necessary.

(i) Weight Limits. Contained in limitations section of the flight manual.

(ii) Center of Gravity Limits. Contained in the limitations section of the flight manual.

(iii) Dimensions and Datum Line Locations. The dimensions and relative location of rotorcraft features associated with weighing and loading of the rotorcraft and with weight and balance computations should be described and/or illustrated.

(iv) Equipment List. The rotorcraft should be defined or described sufficiently to identify the presence or absence of optional systems, features, or installations that are not readily apparent. In addition, all other items of fixed and removable equipment included in the empty weight should be listed.

(v) Fuel and Other Liquids. Fuel and other liquids, including passenger-service liquids that are included in the empty weight, should be identified and listed together with information necessary to enable ready duplication of the particular condition.

(vi) Weight Computations. Computations of the empty weight and empty-weight CG location should be included.

(vii) Empty Weight and Empty-Weight Center of Gravity Location. Statement of these values should be included.

(viii) Loading Schedule. Loading schedule should be included, if appropriate.

(ix) Loading Instructions. Complete instructions relative to the loading procedure, or to use the loading schedule, must be included.

(x) Special Consideration. Consideration should be given to the lateral center-of-gravity loading instructions when various kits such as a side mounted hoist are installed.

CHAPTER 3
AIRWORTHINESS STANDARDS
TRANSPORT CATEGORY ROTORCRAFT

MISCELLANEOUS GUIDANCE (MG)

AC 29 MG 1. CERTIFICATION PROCEDURE FOR ROTORCRAFT AVIONICS EQUIPMENT.

a. Pre-Test Requirements.

(1) General. This test guideline has been prepared as an aid in the evaluation of rotorcraft avionics (aviation electronics) equipment installations. The criteria presented are not to be considered exclusive, but are offered as one method of evaluating design practice and performance. The testing and qualification of an electronic installation should be considered as consisting of three phases: preinstallation, ground, and flight. The amount of testing necessary during each phase will vary with the amount of testing performed on previous phases. For example, if a system is TSO'd, the preinstallation performance is probably substantiated and therefore the ground and flight testing can be reduced accordingly. Also, a thorough ground testing program should result in reduction in necessary flight testing. When the operating or airworthiness regulations require a system to perform its intended function, the use of TSO'd equipment or the submission of data substantiating the equipment performance is strongly recommended.

(2) Regulatory References. Sections 29.1301, 29.1309, 29.1329, 29.1331, 29.1333, 29.1355, 29.1431, 29.1457.

(3) System Design. Systems or equipment presented for installation approval, when not qualified by TSO or other approval means, should be accompanied by sufficient data to substantiate their design acceptability.

(i) Operation of Controls. The operation of controls intended for use during flight, in all possible position combinations and sequences, should not result in a condition that would be detrimental to the continued safe performance of the system.

(ii) Electrical Shock. Systems should be designed so that under all probable conditions the risk of dangerous electrical shock is minimized.

(iii) Fire Hazard. The design of the system should be such that all components meet the applicable fire and smoke protection requirements of §§ 29.853 and 29.863. Cables and equipment to be installed in designated fire zones, that are used during emergency procedures should be at least fire resistant.

(iv) Plugs and Cables. Connector pins for sensitive signal circuits should not be adjacent to pins used for AC power circuits. When redundant wiring is used to

comply with the systems independence regulations such as §§ 29.1331, 29.1333, or 29.1355, the wires should be routed through separate plugs and/or cables with as much physical separation as practicable. The system should be designed so that incorrect mating of plugs is not possible. Cable grounding and shielding techniques should be used to minimize electromagnetic interference.

(4) System Performance. Where the operating or airworthiness regulations require a system to perform its intended function, and when the equipment is not qualified by TSO or other approval means, performance data furnished to the FAA/AUTHORITY can reduce the installed performance testing. The appropriate TSO minimum performance standard may be used as a guide.

(i) Environment. An appropriate means for environmental testing is set forth in Radio Technical Commission for Aeronautics (RTCA) document DO-160. The applicant should submit test reports showing that the laboratory tested categories such as temperature, vibration, altitude, etc., are compatible with the environmental demands to be placed on the rotorcraft.

(ii) Failure Analysis. Procedures are contained in paragraph AC 29.1309, section c of this advisory circular.

(5) Installation Design

(i) Mechanical Installation. Installations should be made to (1) ensure compliance with the airworthiness regulations and (2) comply with the equipment manufacturer's recommendations. The designer should observe good engineering practices in specifying material type, thickness, fastener type, edge distance, and attachment to the equipment rack. By analysis or static tests the mounted equipment should be shown to withstand the inertia forces of §§ 29.561(b)(3) and 29.337. Refer to AC 43.13-2a for static test procedures.

(ii) Arrangement and Visibility. The mounting position of all instruments, switches, position labels, and control heads should make them plainly visible to the pilot while in his normal panel-facing position and under all cockpit lighting conditions likely to occur. TSO approval does not assure instruments will be acceptable in a particular cockpit installation or for all lighting conditions. The instruments, switches, and placarding must be free from reflections. Malfunction annunciation devices should be conspicuous and clearly visible to the pilot. (See Advisory Circular 20-69 and §§ 29.1321, 29.771, 29.1381, and 29.1555(a).)

(iii) Load Analysis.

(A) Power Sources. It should be determined whether the electrical power source capacity is adequate for the system installation under all foreseeable operating conditions including engine failure on multiengine rotorcraft. System load reductions should be applied or power source capacity increased if necessary to assure

compatibility between load and source. Duplicate systems should be powered from separate buses and, in some cases, from independent sources if required by the airworthiness regulations. (Sections 29.1309, 29.1331, 29.1333, 29.1351, or 29.1355.)

(B) Navigation Course Deviation Circuit Loading. It should be determined that the deviation circuit source impedance is matched by its load and that the source capacity is not exceeded. When the system is capable of transfer, the transfer loads should also be considered (§ 29.1301).

(C) Malfunction Indicator Circuit Loading. It should be determined that the malfunction indicator source impedance is matched by its loads and that the source capacity is not exceeded. When the system is capable of transfer, the transfer loads should also be considered (§ 29.1301).

(D) Synchro Signal Loading. When parallel loads are added to Synchro's, the manufacturers' specifications should be reviewed to assure that the additional loads do not result in an overloaded synchro.

(iv) Interface. In many cases, the mating units of a system are designed by different manufacturers. For example, a brand-X gyro may be designed for operation with a brand-X flight director, but later a modifier decides to operate a brand-Y autopilot with the brand-X gyro. This applies just as well to NAV receivers, AREA NAV units, course indicators, omni bearing selectors, tachometer indicators, transmitters and many other equipment items. When this is the case, the applicant should provide data, in summarized form, describing those characteristics such as impedance, volts, etc., that are necessary to assure a compatible and reliable system. The data should also reference the source of the interface data (§ 29.1301).

(v) Flight Tests. An FAA/AUTHORITY engineering flight test is required during type certification or after modification that changes the established limitations, flight characteristics or performance of a rotorcraft or any of its required systems or operating procedures. New installations of equipment in the cockpit or modifications that affect existing equipment in the cockpit should be evaluated by appropriate flight test personnel, if it is necessary to evaluate operational aspects of the change. Where possible, cockpit arrangement, placards, markings, instrument visibility, and light reflections can be evaluated on the ground if the applicant opts to darken the windows. Electromagnetic compatibility functional checks, windshield glare, and pilot workload evaluations may be conducted in flight at the FAA/AUTHORITY flight test pilot's option.

(vi) Radio Master Switches. Some installations incorporate radio master switches to control special busses for the avionics systems. If this capability is provided it should be evaluated to assure failure modes are not introduced that will result in excessive or even total loss of all required avionics. One switch that controls all required avionics is not considered acceptable for IFR installations. The evaluation should include an assessment of the loss of the systems to be included on the radio master switch(es), and the subsequent effect on continued safe flight.

b. Test Procedures. Where the airworthiness or operating regulations require a system to perform its intended function, and/or not create a hazard to other required systems, sufficient testing should be accomplished to assure satisfactory performance. When ground testing is not sufficient to properly evaluate a system's performance, flight testing should be accomplished. Acceptable flight test criteria for specific navigation and communication equipment are contained herein. If the rotorcraft is to be approved for IFR operations, the additional criteria of AC 29 Appendix B should be satisfied.

(1) VHF Systems.

(i) General. Intelligible communications should be provided between the rotorcraft and ground facilities throughout the airspace within 100 NM of an FAA/AUTHORITY ground facility from radio line of sight altitude to the maximum altitude for which the rotorcraft is certificated. Communication should be provided with the rotorcraft at or above line of sight altitude in right and left bank up to 10 degrees and on all headings.

(ii) Electromagnetic Compatibility (EMC). With all systems operating in flight, verify by observation that no adverse effects are present in the flight systems.

(iii) Antenna Measurement. If satisfactory antenna measurement data are provided, the following flight test may be reduced to checks in right and left turns in the vicinity of the predicted bearings of worst performance. If antenna locations are symmetrical, tests may be conducted using only one direction of turn.

(A) Long Range Reception. Starting at a distance of at least 100 NM from the ground facility antenna, perform a right and/or left 360 degree turn at a bank angle of at least 10 degrees. Communicate with the ground facility every 10 degrees of turn to test the intelligibility of the signals received at the ground station and in the rotorcraft. For 100 NM, the minimum line of sight altitude is approximately 7,000 feet.

(B) Approach Configuration. With the landing gear down and with the rotorcraft in the approach configuration (at a distance of 10 NM from the ground station and in an idle power descent toward the station), demonstrate intelligible communications between the rotorcraft and the ground facility.

(2) HF Systems.

(i) Acceptable communications should be demonstrated by contacting a ground facility at a distance of at least 100 nautical miles. Single sideband equipment should also perform acceptably in the amplitude modulation mode of operation.

(ii) It should be demonstrated that precipitation static is not excessive when the aircraft is flying at cruise speed (in areas of high electrical activity, including

clouds and rain if possible). Use the minimum amount of installed dischargers for which approval is sought.

(3) VOR Systems.

(i) These flight tests may be reduced if adequate antenna radiation pattern studies have been made and these studies show the patterns to be without significant holes (with the rotorcraft configurations used in flight, i.e., landing gear retracted en route and extended for approach). Particular note should be made in recognition that certain rotor RPM settings may cause modulation of the course deviation indication (rotor modulation). VOR performance should be checked for rotor modulation in both approach and en route operation while varying rotor RPM throughout its normal range.

(ii) The airborne VOR system should operate normally with warning flags out of view at all headings of the rotorcraft (in level flight) throughout the airspace within 100 NM of the VOR facility while flying above the radio line of sight altitude to within 90 to 100 percent of the maximum altitude for which the rotorcraft is certified.

(iii) The accuracy determination should be made such that the indicated reciprocals agree within 2 degrees. Tests should be conducted over at least two known points, on the ground, such that data are obtained in each quadrant. Data should correlate with the ground calibration and in no case should the absolute error exceed ±6 degrees. Fluctuation of the course deviation indication should not be excessive.

(A) En route Reception. Fly from a VOR facility, rated for high altitude, along a radial to a range of 100 NM. The VOR warning flag should not come into view, nor should there be deterioration of the station identification signal. The course width should be 20 degrees (±5 degrees tolerance, 10 degrees either side at the selected radial). If practical, perform en route segment on a doppler VOR station to verify the compatibility of the airborne unit. Large errors have been found when incompatibility exists.

(B) Long Range Reception. Perform a 360-degree right and a 360-degree left turn at a bank angle of at least 10 degrees at an altitude just above radio line of sight (see b(1)(iii)(A) for line of sight altitude) and at a distance of at least 100 NM from the VOR facility. Signal dropout should not occur as evidenced by the malfunction indicator appearance. Dropouts that are relieved by a reduction of bank angle at the same relative heading to the station are satisfactory. The VOR identification should be satisfactory during the left and right turns.

(C) En route Station Passage. Verify that the To-From indicator correctly changes as the rotorcraft passes through the cone of confusion above a VOR facility.

(4) Localizer Systems.

(i) Flight test requirements may be modified to allow for adequate antenna radiation pattern measurements as discussed under VOR paragraph b(3)(i) flight test.

(ii) The signal input to the receiver presented by the antenna system should be of sufficient strength to keep the malfunction indicator out of view when the rotorcraft is in the approach configuration and at least 10 NM from the station. This signal should be received for 360 degrees of rotorcraft heading at all bank angles up to 10 degrees left or right at all normal pitch altitudes, and at an altitude of approximately 2,000 feet.

(iii) The deviation indicator should properly direct the aircraft back to course when the rotorcraft is right or left of course.

(iv) The station identification signal should be of adequate strength and sufficiently free from interference to positive station identification, and voice signals should be intelligible with all electric equipment operating and pulse equipment transmitting.

(v) Localizer performance should be checked for rotor modulation in approach while varying rotor RPM throughout its normal range.

(A) Localizer Intercept. In the approach configuration and a distance of at least 10 NM from the localizer facility, fly toward the localizer front course, inbound, at an angle of at least 50 degrees. Perform this maneuver from both left and right of the localizer beam. No flags should appear during the time the deviation indicator moves from full deflection to oncourse. If the total antenna pattern has not been shown by ground checks or by VOR flight evaluation to be adequate, additional intercepts should be made.

(B) Localizer Tracking. While flying the localizer inbound and not more than 5 miles before reaching the outer marker, change the heading of the rotorcraft to obtain full needle deflection. Then fly the rotorcraft to establish localizer on course operation. The localizer deviation indicators should direct the rotorcraft to the localizer on course. Perform this maneuver with both a left and a right needle deflection. Continue tracking the localizer until over the transmitter. At least three acceptable front course and back course flights should be conducted to 200 feet or less above threshold.

(5) Glide Slope Systems.

(i) Flight Test. The signal input to the receiver should be of sufficient strength to keep the warning flags out of view at all distances to 10 NM from the facility. This performance should be demonstrated at all aircraft headings from 30 degrees left to 30 degrees right of the localizer course. The deviation indicator should properly direct the aircraft back to path when the aircraft is above or below path. Interference with the navigation operation should not occur with all rotorcraft equipment operating

and all pulse equipment transmitting. There should be no interference with other equipment as a result of glide slope operation.

(ii) Glide Slope Intercept. While flying the localizer course inbound in level flight, intercept the glide slope below path at least 10 NM from the station. Observe the glide slope deviation indicator for proper crossover as the aircraft flies through the glide path. There should be no flags from the time the needle leaves the full scale fly-up position until it reaches the full scale fly-down position.

(iii) Glide Slope Tracking. While tracking the glide slope, maneuver the aircraft through normal pitch and roll attitudes. The glide slope deviation indicator should show proper operation with no flags. At least three acceptable approaches to 200 feet or less above threshold should be conducted.

(iv) Interference. With all rotorcraft electrical equipment operating and all pulse equipment transmitting, determine that there is no interference with the glide slope operation (some interference from the VHF may be acceptable), and that the glide slope system does not interfere with other equipment.

(v) Glide slope performance should be checked for rotor modulation during the approach while varying rotor RPM throughout its normal range.

(6) Marker Beacon System.

(i) The marker beacon annunciator light should be illuminated for a period of time representing 2,000 to 3,000 feet distance when flying at an altitude of 1,000 feet as it passes over a marker beacon (see table below).

Altitude = 1,000 feet (AGL)

Ground Speed Light Time (Seconds)

Knots	2,000 feet	3,000 feet
90	13	20
110	11	16
130	9	14
150	8	12

(ii) The audio signal should be of adequate strength and sufficiently free from interference to provide positive identification.

(iii) Technical: Approach the markers at a ground speed of 130 knots and at an altitude of 1,000 feet above ground level. While passing over the outer and middle markers with the localizer deviation indicator centered, the annunciators should be

illuminated for a period of 9 to 14 seconds. Check for acceptable intensity of the indicator lights in bright sunlight and at night. For slower rotorcraft, the interval should be proportionately longer.

NOTE: It is recognized that the normal altitude at the middle marker is on the order of 150 to 200 feet. Due to variations in both glide slope angle and position of the middle marker in relation to the runway, the on glide path marker width will vary considerably which in turn will give a widely varying light time. Therefore, the more clearly defined criteria at 1,000 feet altitude should be used for quantitative testing of the middle marker function.

(7) Automatic Direction Finding Equipment (ADF).

(i) Range and Accuracy. The ADF system installed in the rotorcraft should provide operation with errors not exceeding 5 degrees and the aural signal should be clearly readable up to the distance listed for any one of the following types of radio beacons:

(A) 50 NM from an H facility (transmitter power 50-2,000 watts).

(B) 25 NM from an MH facility (transmitter power less than 50 watts).

(C) 15 NM from a compass locator (transmitter power less than 25 watts).

(ii) Needle Reversal. The ADF indicator needle should make only one 180-degree reversal when the rotorcraft flies over a radio beacon. This test should be made both with and without the landing gear extended.

(iii) Indicator Response. When switching stations with relative bearings differing by approximately 175 degrees, the indicator should indicate the new bearing within ±5 degrees within 10 seconds.

(iv) Antenna Mutual Interaction. For dual installations, there should not be excessive coupling between the antennas.

(v) Technique.

(A) Range and Accuracy. Tune in a number of radio beacons spaced throughout the 200 - 415 kH range and located at distances near the maximum range for the beacon (see (a) Range and Accuracy). The identification signals should be clear and the ADF should indicate the approximate direction to the stations. Beginning at a distance of at least 15 NM from a compass locator in the approach configuration, fly inbound on the localizer front course and make a normal ILS approach. Evaluate the aural identification signal for strength and clarity and the ADF for proper performance with the receiver in the ADF mode. All electrical equipment on the aircraft should be operating and all pulse equipment should be transmitting. Fly over a ground check

point with relative bearings to the facility of 0, 45, 90, 135, 180, 225, 270, and 315 degrees. The indicated bearings to the station should correlate within 5 degrees.

(B) Needle Reversal. Fly the aircraft over an H, LOM, or LMM facility at an altitude of 1,000 to 2,000 feet above ground level. The indicator needle should make only one reversal.

(C) Indicator Response. With the ADF indicating station dead ahead, switch to a station having a relative bearing of approximately 175 degrees. The indicator should indicate within ±5 degrees of the bearing in not more than 10 seconds.

(D) Antenna Mutual Interaction. If the ADF installation being tested is dual, check for coupling between the antennas by using the following procedure.

(1) With #1 ADF receiver tuned to a station near the low end of the ADF band, tune the #2 receiver slowly throughout the frequency range of all bands and determine whether the #1 ADF indicator is adversely affected.

(2) Repeat (A) with #1 ADF receiver tuned to a station near the high end of the ADF band.

(8) Distance Measuring Equipment (DME).

(i) The DME system should:

(A) Continue to track without dropouts when the rotorcraft is maneuvered throughout the air space within 100 NM of the VORTAC station and at altitudes from the radio line of sight to the maximum altitude for which the rotorcraft is certificated. This tracking standard should be met with the rotorcraft in the cruise configuration, at bank angles up to 10 degrees, climbing and descending at normal maximum climb and descent attitude, and orbiting a DME facility.

(B) Provide clearly readable identification of the DME facility.

(C) DME operation should not interfere with other systems aboard the rotorcraft (some interference with the transponder may be acceptable) and DME operation should not be adversely affected by other equipment.

(D) DME Hold.
The DME should continue to operate and track when DME Hold is activated and the channel switch is varied.

(E) DME Override. When an override switch is provided, proper operation should be demonstrated.

(ii) Technique.

(A) Climb and Maximum Distance. Determine that there is no mutual interference between the DME system and other equipment aboard the rotorcraft. Beginning at a distance of at least 10 NM from a DME facility and at an altitude of 2,000 feet above the DME facility, fly the rotorcraft on a heading so that the aircraft will pass over the facility. At a distance of 5 to 10 NM beyond the DME facility, operate the rotorcraft at its normal maximum climb attitude up to an altitude of 7,000 feet maintaining the aircraft on a station radial (within 5 degrees). The DME should continue to track with no unlocks to a range of 100 NM. Record the maximum altitude flown.

(B) Long Range Reception. Perform two 360 degree turns, one to the right and one to the left, at a bank angle of 8 to 10 degrees at least 100 NM from the DME facility. A single turn will be sufficient if the antenna installation is symmetrical. There should be no more than one unlock not to exceed one search cycle (maximum 35 seconds) in any 5 miles of radial flight.

(C) Penetration. From an altitude of above 7,000 feet (AGL) perform a let-down directly toward a ground station (DME facility) at a normal maximum rate of descent so as to reach an altitude of 5,000 feet above the DME facility 5 to 10 NM before reaching the DME facility. The DME should continue to track during the maneuver with no unlocks.

(D) Approach. Make a normal approach to land at a field with a DME located on the airport. The DME should track without an unlock (station passage excepted).

(E) DME Hold. With the DME tracking, activate the DME hold function. Change the channel selector to a localizer frequency. The DME should continue to track on the original station.

(9) Transponder Equipment.

(i) Performance Criteria. The ATC transponder system should furnish a strong and stable return signal to the interrogating radar facility when the rotorcraft is flown in straight and level flight throughout the air space within 100 NM of the radar station from radio line of sight to within 90 to 100 percent of the maximum altitude for which the rotorcraft is certificated. The airborne system should be controllable so that objectionable ring-around, spoking and clutter will not persist. The transponder system should not interfere with other systems aboard the rotorcraft and other equipment should not interfere with the operation of the transponder system (some interference from DME operation may be acceptable). When the rotorcraft is flown in the following maneuvers within the air space described above, the dropout time should not exceed 20 seconds.

(A) In turns at bank angles up to 10 degrees.

(B) Climbing and descending at normal maximum climb and descent attitude.

(C) Orbiting a radar facility.

(ii) Technique.

(A) Climb and Distance Coverage: Beginning at a distance of at least 10 NM from and at an altitude of 2,000 to 3,000 feet above that of the radar facility and using a transponder code assigned by the ARTCC, fly on a heading that will pass the rotorcraft over the facility. At a distance of 5 to 10 NM beyond the facility, operate the rotorcraft to maintain an altitude above radio line of sight while maintaining the aircraft at a heading within 5 degrees from the radar facility to 100 NM from the radar facility.

(B) Communicate with the ground radar personnel for evidence of transponder dropout. During the flight, check the “ident” mode of the ATC transponder to assure that it is performing its intended function. Determine that the transponder system does not interfere with other systems (except possibly the DME) aboard the rotorcraft and that other equipment (except possibly the DME) do not interfere with the operation of the transponder system. There should be no dropouts, that is, when there is no return for two or more sweeps. The operation of the ATC transponder should be verified over the station, at 25 NM, and at 100 NM.

(C) Long Range Reception. Perform two 360-degree turns, one to the right and one to the left, at bank angles of 8 to 10 degrees with the flight pattern at least 100 NM from the radar facility. During these turns, the radar display should be monitored and there should be no signal dropouts (two or more sweeps).

(10) Weather Radar Equipment.

(i) Bearing Accuracy. The indicated bearing of objects shown on the display should be within 5 degrees of their actual magnetic bearing within the sectors 40 degrees right and left of the aircraft longitudinal axis. Beyond 40 degrees right and left, bearing accuracy should be ±10 degrees.

(ii) Distance of Operation. The radar should be capable of displaying prominent targets throughout the distance and angular range of the display.

(iii) Antenna Stabilization. When antenna stabilization is provided, it should eliminate blurring of the display for the ranges of pitch and roll for which it is designed.

(iv) Beam Tilting. The radar antenna should be installed so that its beam is adjustable to any position between 10 degrees above and 10 degrees below the plane of rotation of the antenna.

(v) Technique.

(A) Bearing Accuracy. Fly under conditions which allow visual identification of a target, such as an island, a river, or a lake, at a range within 10 percent of the maximum range of the radar. When flying toward the target, select a course that will pass over a reference point from which the bearing to the target is known. When flying a course from the reference point to the target determine the error in displayed bearing to the target on all range settings. Change heading in increments of 10 degrees and determine the error in the displayed bearing to the target.

(B) Contour Display (Iso Echo). If heavy cloud formations or rainstorms are reported within a reasonable distance from the test base, select the contour display mode. The radar should differentiate between heavy and light precipitation. In the absence of the above weather conditions, determine the effectiveness of the contour display function by switching from normal to contour display while observing large objects of varying brightness on the indicator. The brightest objects should become the darkest when switching from normal to contour mode.

(C) Stability. While observing a target return on the radar indicator, turn off the stabilizing function and put the aircraft through pitch and roll movements. Observe the blurring of the display. Turn the stabilizing mechanism on and repeat the roll and pitch movements. Evaluate the effectiveness of the stabilizing function in maintaining a sharp display.

(D) Ground Mapping. Fly over areas containing large, easily identifiable landmarks such as rivers, towns, islands, coastlines, etc. Compare the form of these objects on the indicator with their actual shape as visually observed from the cockpit.

(E) Mutual Interference. Determine that no objectionable interference is present on the radar indicator from any electrical or radio/navigational equipment when operating, and that the radar installation does not interfere with the operation of any of the rotorcraft's radio/navigational systems.

(11) Area Navigation. Advisory Circular 90-45A is the basic criteria for evaluating an area navigation system, including acceptable means of compliance to the FAR.

(12) Inertial Navigation. Advisory Circular 25-4, Inertial Navigation Systems, is the basic criteria for the engineering evaluation of an inertial navigation system (INS) and offers acceptable means of compliance with the applicable Federal Aviation Regulations which contain mandatory requirements in an objective form. The engineering evaluation of an INS should also include awareness of Advisory Circular 121-13, Self-Contained Navigation Systems (Long Range), which presents criteria to be met before an applicant can get operational approval. For flights up to 10 hours, the radial error should not exceed 2 nautical miles per hour of operation on a 95 percent statistical basis. For flights longer than 10 hours, the error should not

exceed ±20 NM crosstrack or ±25 NM along track error. A 2-nautical-mile radial error is represented by a circle, having a radius of 2 nautical miles, centered on the selected destination point.

(13) Doppler Navigation. Doppler navigation system installed performance should be evaluated in accordance with Advisory Circular 121-13. (See FAR 121, Appendix G).

(14) Radio Altimeters. Radio altimeter system installed performance should be evaluated in accordance with RTCA Document DO-123, Appendix A, Part II.

(15) Emergency Locator Transmitters (ELT).

(i) Emergency locator transmitter performance should be evaluated in accordance with TSO-C91. ELT installations should be examined for potential operational problems. There have been numerous instances of interaction between ELT and other VHF installations. ELT antenna installations in close proximity to other VHF antennas should be suspect. Antenna patterns of previously installed VHF antennas should be measured after an ELT installation. Some problems caused by ELT installations are:

(A) Loss of radiated power from VHF communications.

(B) Reradiation of VHF transmitter energy such that navigation crosspointers are affected.

(C) Reception of FM broadcast, at high level, in VHF communications.

(D) Inadvertent activation of the ELT by VHF transmitted energy. (See AD 72-22-3.)

(ii) ELT Installation. TSO-C91 specifies that the ELT be automatically activated when subjected to a force of 5.0 (+2,-0)g in the direction of the longitudinal axis of the aircraft. This recommendation for mounting is considered satisfactory for rotorcraft. In recognition of the significant vertical impact velocity that rotorcraft commonly have an optional placement of the ELT pitched down 30° from the horizontal axis of the rotorcraft is also satisfactory.

(16) Audio Interphone Systems. Acceptable communications should be demonstrated for all audio equipment including microphones, speakers, headsets, and interphone amplifiers. All modes of operation should be tested, including operation during emergency conditions (i.e., emergency descent, and oxygen masks) with all rotorcraft engines running, all rotorcraft pulse equipment transmitting, and all electrical equipment operating.

(17) Portable Battery Powered Megaphones (AC 121-6). Megaphone performance should be evaluated in accordance with AC 121-6.

(18) Omega and Omega/VLF Navigation Systems. Omega and Omega/VLF Navigation systems should be evaluated in accordance with the following AC's that apply to the type of approval requested:

(i) AC 120-37, Approval of Omega Systems, as a sole means of overwater long range navigation.

(ii) AC 120-31A, Approval of Airborne Omega Navigation Systems, as a means of updating self-contained navigation systems.

(iii) AC 20-101B, Approval of Omega and Omega/VLF Navigation.

(19) Rotorcraft Condition Monitoring System Installations.

(i) General. Avionics equipment and systems are being installed in rotorcraft to collect data to be used in assessing engine/rotorcraft performance and frequency of maintenance. Some of the items monitored are engine operating exceedances, hot starts, power assurance, and cycle counts. The monitoring systems being addressed by this paragraph are those used to collect data for maintenance purposes not those monitors which are utilized as part of the control system for autopilot/flight controls or engine controls. At present, optional approvals are being requested for most of these systems not performing any required functions. However, most of the applicants anticipate requesting approval for the systems to be used in the future to perform some required function or to allow required maintenance to be predicated on the operation of the system. This consideration becomes particularly important if the system is software based. A further discussion of system software is included in paragraph AC 29 MG 1 b(19)(iii)(B).

(ii) System Installation. The system installation should be shown to be free from hazards considering both normal operation and possible malfunctions. Malfunctions which might be caused by software errors are discussed under paragraph AC 29 MG 1 b(19)(iii)(B). The accuracy and response of the monitoring device/system should be sufficient to allow the operational and maintenance personnel to relate the data obtained to required maintenance actions. The exceedance (engine limit) information being acquired by these systems is or will be used in place of information previously acquired from field reports of operational personnel utilizing the basic aircraft instruments. In this case, the automated system will generally produce results which are more accurate than the basic aircraft instruments. However, in this circumstance, it is not appropriate to require the monitor system to be more accurate than the previously approved methods used to provide the required exceedance data. If the data collected by the system require filtering prior to use, it is equally acceptable to accomplish this filtering either as the data are being acquired (airborne function) or

when the data are analyzed (ground based function) and used in the maintenance of the rotorcraft.

(iii) System Components.

(A) Hardware. The hardware of the system when operating under the control of the imbedded software should be shown to comply with § 29.1301. Additionally, in showing compliance to § 29.1309(a), laboratory testing to the appropriate portions of the latest revision of RTCA Document DO-160 should be performed.

(B) Software. If the function of the monitor system depends on embedded airborne software to determine all or part of its functioning, Document DO-178 is the recommended standard to be used for the approval of the system software. A further discussion of the use of this document is included in paragraph AC 29.1309. The selection of the software level should be carefully considered because system approval is sometimes initially sought on the basis of the system being a non-required optional system. If it has further been shown that no dependence is made on the system software to preclude a hazardous failure mode, then a low software level would be acceptable. However, it is very difficult to qualify software to higher levels of “quality” once the software has been initially certified. Because of this, it is recommended that the software be chosen to the level consistent with the ultimate use to which approval of the system is planned. If the system is to be approved only as non-required optional equipment, then the choice of a low level of software qualification may be appropriate. However, when more experience is gained with the operation of the system, and it is ultimately planned to seek approval to perform required functions, then an appropriate higher level of software should be initially obtained.

NOTE: Extensive service experience should not be considered as a basis for level of criticality without accomplishing RTCA DO-178 procedures.

(20) Night Vision Goggles (NVG).

(i) Background. Night vision goggles (NVG) have been used by U.S. military pilots since the early 1970’s. The first units (first generation or GEN I) were constructed from the rifle “Sniper-Scopes.” These units did not provide much light amplification. The second generation (GEN II) were still primarily designed for ground use. Second generation high performance units (military designation AN/PVS-5C) had some consideration for flight use but were still lacking in several aspects. A light level of at least a quarter moon well above the horizon was required for operation of these NVG. At first the normally helmet-mounted units covered the pilot’s entire upper face and the pilot could only see through the NVG. In order to protect the light amplification system these NVG had an automatic shutoff feature when brighter than relatively low levels of light were encountered. Normal incandescent and especially red incandescent lights would cause these NVG to shut down. Aircraft cockpit lights, especially the red warning lights, would cause “blooming” (an increased brightness of all or portions of the NVG

field of view with the disappearance of the “picture” in that area) or a total shutdown of the NVG. Military aircraft cockpits and lighting systems were significantly modified to avoid this problem. In the late 1980’s the military pushed technology for better and aircraft compatible NVG. Third generation (GEN III, military designation ANVIS or AN/AVS-6) NVG systems became available about 1988. These systems require only star light for satisfactory operation.

(ii) Procedures. As of January 1990, no approvals for civil rotorcraft operations with NVG have been issued. Since NVG are not installed in the rotorcraft, they are not required to be approved as part of the type design. However, since an operational approval would be required for use of NVG, they should meet some acceptable performance standard. The minimum standard recommended is the GEN III NVG. The performance of these NVG are rated as their spectral response to irradiated light sources, measured as density of incident photons per square meter. Third generation, AN/AVS-6, NVG have been evaluated for compatibility with a limited number of rotorcraft and were generally found to be usable during en route operations with no cockpit lighting systems modifications. It is anticipated, however, that some aircraft may require significant modifications to the existing cockpit lighting system. The FAA/AUTHORITY policy is that modification of the cockpit to a non-compliant configuration to accommodate NVG use is not acceptable. For instance, alteration of the required red warning annunciators to some other color is not acceptable. Since individual rotorcraft may have been modified with additional lights or systems, each rotorcraft being considered for use with NVG should be evaluated by an FAA/AUTHORITY representative during a night flight. If it is anticipated that cockpit lighting system modifications will be required to achieve an adequate level of NVG compatibility FAA/AUTHORITY involvement should be arranged as soon as possible. Preferably this evaluation flight would be made with two pilots or a pilot and safety observer, over a known area, where all the aircraft and cockpit lights are operated and their effect on the NVG determined. Reflections of landing or searchlights on windshields or other glass during approach or landing may affect NVG and may impose a minimum altitude restriction for use of NVG. Failure of the NVG should be evaluated during any critical flight phase.

Note that the above discussion is purposely limited in scope. Issues such as crew training and operating limitations would have to be addressed in detail to obtain an operational approval.

(21) Rotorcraft Health and Usage Monitoring Systems (HUMS).

(i) General. HUMS can be divided into two major categories: Health Monitoring Systems and Usage Monitoring Systems. The provisions of § 29.1301 are used to determine that the system performs its intended function. The provisions of § 29.1309(a) and (b) are used to look at the impact of environmental conditions and malfunctions. To date (mid-1990) HUMS have not been approved to replace service life or other specific physical limits but several systems are now in the process of seeking approval. Health monitoring systems are considered to be the serious applications of

this technology, and it will probably be some time before the necessary data base to allow full reliance on this technology is available. There have been numerous approvals of usage monitoring systems as optional equipment, and a good example of this technology is a condition monitoring system described in paragraph AC 29 MG 1b(19) above.

(ii) Health Monitoring Systems.

(A) It is anticipated these systems will begin as “optional” systems in order to build a data base to support expansion of the approval to achieve credit for extension of maintenance intervals, and so forth. Systems range from low to high integrity requirements depending on the determined criticality of application.

(B) Some systems that are being considered will utilize off aircraft processing of data. If this is to be pursued it should be assumed that the aircraft data will be lost or misplaced at the processing center, and the aircraft system design should consider this possibility. Some on-board data storage is one way to account for this lost data. The integrity of the processing center’s software should be equal to that of the aircraft software. In addition the intervals for processing the data from each flight should be specified as part of the approval.

(C) Due to the limited experience with these systems it is suggested the issue paper process be utilized to record the progress of the approval, and to provide information for later updating of this AC material.

CHAPTER 3
AIRWORTHINESS STANDARDS
TRANSPORT CATEGORY ROTORCRAFT

MISCELLANEOUS GUIDANCE (MG)

AC 29 MG 2. STANDARDIZED TEST PROCEDURE FOR ROTORCRAFT DC ELECTRICAL SYSTEM TESTS.

a. Test Requirements.

(1) General. The following functions and characteristics are to be evaluated:

(i) Normal System Operation.

(ii) Parallel Load Division.

(iii) Excitation.

(iv) Stabilization.

(v) Systems Malfunction.

(vi) Environmental Capability.

(vii) Electromagnetic Compatibility.

(viii) Cooling Capability.

(ix) Surge Characteristics, Ripple Voltage, and Voltage Spikes.

(2) Instrumentation. Calibration records should be available for all instrumentation. Current and voltage vs. time should be recorded in a permanent form. Enough specific currents and voltages should be recorded to allow reconstruction of any sequence of events that would happen as a result of any system testing described herein.

(3) Regulatory References. Sections 29.1301, 29.1307(c), (d), (e), 29.1309, 29.1351, 29.1353, 29.1355, 29.1357, 29.1363.

(4) Miscellaneous. The assigned FAA/AUTHORITY systems and equipment engineer normally witnesses these tests and should be notified as far in advance of the testing as possible to minimize scheduling problems. Conformity of the test setup must be established prior to conducting any testing. Most of the above test categories can be conducted on a bench test setup. A bench test setup is especially recommended in the case of the system malfunction tests. It is the applicant's option to demonstrate his

equipment either on the bench or installed for ground tests. When a bench setup is used, it should represent the actual aircraft installation to the extent that components and wiring (type, gage, and length) are duplicated. Some retesting may be necessary on the aircraft to verify the bench test results.

b. Ground and Bench Test Procedures.

CAUTION: Prior to disconnecting the battery and removing or adding large loads, either isolate the avionics systems or assure that transients induced are within limits of the avionics equipment.

(1) Normal System Operation.

NOTE: Equipment should be operated for at least 10 minutes prior to each test as a warmup.

(i) Minimum electrical load for paralleling and minimum engine RPM.

(ii) Vary RPM of all engines from low to high and back to low.

(iii) Repeat b(1)(ii) for maximum and 50 percent of maximum electrical loads.

(2) Parallel Load Division (if parallel system).

(i) Minimum electrical load for paralleling and minimum engine RPM.

(ii) Fifty percent of maximum electrical load and minimum engine RPM.

(iii) Maximum electrical load and minimum engine RPM.

(iv) Minimum electrical load for paralleling, vary No. 1 engine RPM from low to high and back to low while holding the RPM of the other engine at minimum (low).

(v) Repeat b(2)(d) for each other engine on the rotorcraft.

(vi) Repeat b(2)(d) and b(2)(e) procedures with 50 percent of maximum electrical load.

(vii) Repeat b(2)(d) and b(2)(e) procedures with a maximum electrical load.

(3) Excitation.

NOTE: All of these tests are to be conducted with the battery OFF since the purpose of the tests is to determine if the ship's battery is necessary for excitation of the alternator(s)/generator(s).

(i) Minimum anticipated electrical load, low engine RPM, and alternator(s)/generator(s) OFF. Demonstrate that when an alternator/generator is turned ON, it will come on the line. Repeat for any other alternators/generators in the system.

(ii) Maximum electrical load, low engine RPM, and alternator(s)/generator(s) OFF. Demonstrate that each alternator/generator will individually come on the line.

(iii) Minimum anticipated electrical load, high engine RPM, and alternator(s)/generator(s) OFF. Demonstrate that each alternator/generator will individually come on the line.

(4) Stabilization.

NOTE: All of these tests are to be conducted with the ship's battery OFF, since the purpose of the tests is to determine if the ship's battery is necessary for stabilization of the alternator/generator. In each case, if the ship's battery is not necessary for stabilization, the alternator/generator should be on the line and remain there at a satisfactory voltage level.

(i) Minimum anticipated electrical load, low engine RPM, alternator(s)/generator(s) ON. Switch on the heaviest electrical load that is anticipated to be installed on the aircraft.

(ii) Repeat b(4)(i) for a maximum electrical load and low engine RPM.

(iii) Repeat b(4)(i) for a minimum anticipated electrical load and high engine RPM.

(iv) Repeat b(4)(i) for a maximum electrical load and high engine RPM.

(5) System Malfunctions.

(i) Overcurrent faults (faults to airframe ground that are less than 5.0 Milliohms) should be applied to buses and feeders as necessary to demonstrate that the system's overcurrent circuit protective devices are properly coordinated and provide adequate protection/fault isolation.

(ii) Simulate an overvoltage condition on each alternator/generator to demonstrate satisfactory operation of the overvoltage sensing network. On a

multiengine configuration, the faulty alternator/generator should be removed without affecting operation of the remainder of the system.

(iii) The annunciation circuitry should be checked for indication of failures such as overvoltage, tripped generators, overcurrent, open feeders, open tie breakers, etc.

(6) Aircraft Ground Tests. If the above tests (reference b(1) through (4) inclusive) are conducted on a bench setup, enough tests should be repeated on the aircraft to validate the bench test results. The following tests should be conducted on the aircraft:

(i) Normal Battery Starts. Start all engines on the aircraft following the normal procedure prescribed in the flight manual. Record starter volts and amperes, time, and any other parameters deemed necessary.

(ii) Ground Power Cart Starts. If the aircraft is equipped with a plug for a ground power cart, use the procedure described in the flight manual and start all engines. Record starter volts and amperes, time, and any other parameters deemed necessary.

(iii) Emergency Battery Operation (if provided). The emergency battery mode of operation should be tested to assure at least proper switching, annunciation, and battery capacity. In some instances, an analysis of battery capacity may be adequate.

(iv) Other Tests. Conduct other tests as necessary to demonstrate proper operation of the specific design being evaluated.

(v) Distribution System Tests. With all systems operating individually, open and close feeder circuit breakers and system circuit breakers and assure separation of power sources for essential systems. For example, removing power from one bus by opening a feeder should not result in loss of both NAV 1 and NAV 2 or both COMM 1 and COMM 2 or both attitude gyros, or for example, opening NAV 1 circuit breaker should not affect NAV 2, etc. If the opening of the feeder protection has been satisfactorily demonstrated on a bench test facility, it should not be necessary to repeat that demonstration on the actual aircraft. The effect of loss of power sources should also be demonstrated on the aircraft. Reference §§ 29.1357(e) and 29.1309.

(7) Environmental Qualification. Each component of the system, such as relays, switches, alternator, generator, sensor, regulator, diode, etc., should be qualified to the critical environmental parameters. The temperature, altitude, humidity, and vibration expected in the approved aircraft operational envelope should fall within those limits the applicant substantiates for the electrical system components. (Refer to paragraph AC 29.1309.)

(8) Electromagnetic Compatibility. At no time during any of the qualification testing described herein should objectionable interference in the aircraft's radio, navigation, cockpit instrument, autopilot, or interphone system be considered acceptable.

NOTE: The quantitative type testing used for Items (7) and (8) above is outside the scope of this document. The latest revision of RTCA Document DO-160 is an acceptable standard.

(9) Transient Tests. The D.C. system should be tested and shown to exhibit surge, ripple, and spike voltages within the limits of the latest revision of RTCA Document DO-160.

(i) The surge and ripple voltage tolerance of avionic equipment is defined by the latest revision of RTCA Document DO-160. Category Z is considered applicable to rotorcraft D.C. systems.

(ii) The voltage spike tolerance of avionic equipment is defined by the latest revision of RTCA Document DO-160.

(10) Ground and Bench Test Report. At the conclusion of the ground and bench test program a report should be prepared and submitted that contains at least the following:

(i) System schematic (including instrumentation tie-in).

(ii) Instrumentation list (including calibration records).

(iii) Test result recordings.

(iv) Detailed procedures and results obtained.

(v) Conformity inspection records.

(vi) Other data, photographs, etc., to describe the test setup.

(vii) Summary of the test results. This summary should show the maximum load to which each bus, alternator/generator, etc., has been tested.

(viii) Analysis of test results. This should describe how compliance with the regulations has been shown. It should include consideration of the critical failure modes. Refer to paragraphs AC 29 MG 1 a(4)(ii) and AC 29.1309c for further information on failure analyses.

c. Flight Test Procedures.

(1) Alternator/generator cooling tests should be conducted in accordance with paragraph AC 29.1351.

(2) On multiengine rotorcraft, single-engine air starts should be conducted using the manufacturer's recommended procedures. This should be accomplished for each engine individually.

(3) A cockpit evaluation of the electrical system should be conducted to evaluate:

(i) Switch, circuit breaker, and annunciator identification.

(ii) Visibility of placarding, switches, etc., during bright sunlight and night operation.

(iii) Color of annunciators as related to the function/malfunction annunciated.

(iv) Load meter readability.

(v) Access to essential switches, circuit breakers, etc.

(vi) Electromagnetic interference.

(vii) Compatibility of the electrical system with the rotorcraft flight manual and the need for additional procedures in the RFM.

(viii) Clarity of functions such as opened feeder breakers, tie breakers, related annunciation, and necessary corrective action in the event of malfunction.

(ix) Absence of undesired functions in relation to switch combinations.

CHAPTER 3
AIRWORTHINESS STANDARDS
TRANSPORT CATEGORY ROTORCRAFT

MISCELLANEOUS GUIDANCE (MG)

AC 29 MG 3. ROTORCRAFT AND SYSTEMS CERTIFICATION FOR CATEGORY II OPERATIONS.

a. Explanation.

(1) Category II instrument approach and landing minimums variations are based on ground facilities and environment, aircraft equipment, crew training, crew proficiency, and maintenance programs. For the pilot, the approach and landing minimums final consideration is the runway visibility which can be, and usually is, related to a cloud ceiling, although the concept is that if there is a runway visibility of 4,000 feet, as an example, there is a very high probability that the ceiling will be at least 300 feet. Therefore, Category I minimums are weather conditions of not less than a 200-foot ceiling and ½-mile visibility or runway visual range (RVR) of 2,400 feet. Category II minimums permit approaches at less than 200 feet decision height/RVR 2,400 to as low as 100 feet/RVR 1,200. Category III approach minimums are less than Category II but will not be discussed here.

(2) The ground facilities required for a Category II approach and landing include specific approach lighting extending more than 3,000 feet from the runway, thus eliminating any present heliports from being approved for Category II operations. Therefore, the following Category II approvals procedures for rotorcraft assume an approach to a runway at airspeeds at or above V_{MINI}.

(3) The regulations and advisory material covering the approval for IFR Category II operations are included in Part 91, Appendix A, and AC 91-16, Category II Operations - General Aviation Airplanes. Those references address airplanes; however, the concept is also suitable for the approval of rotorcraft for Category II operations. The equipment to be required and the procedures to be followed are basically the same for a rotorcraft as for an airplane. Additional reference material concerning Category II approval is contained in FAA Order 8440.5A, General Aviation Operations Inspection's Handbook, and AC 120-29, Criteria for Approving Category I and Category II Landing Minimum for FAR 121 Operations.

(4) Authority for rotorcraft to use Category A airplane minimums is contained in § 97.3(d)(1). FAA Order 8440.5, §§ 97.3, 91.6, and Appendix A of Part 91 provide authority to consider the rotorcraft as a small, Category A aircraft and relief from the requirement for two pilots and two sets of instruments and equipment. Any rotorcraft that is presented for Category II certification must first meet the requirements for rotorcraft instrument flight (Appendix B of Part 29 and paragraph AC 29.1543).

(5) In addition to the ground facilities and environment noted above, there are requirements in three other general areas to obtain Category II approval. These are certification of the aircraft and systems, certification and continuation training of flight crews, and a continuing maintenance program for the aircraft and Category II required systems. The entire Category II approval requires a Category II manual that covers all of these areas. FAA/AUTHORITY approval of this manual would normally be the responsibility of the operations and airworthiness inspectors that grant the approval to an operator for Category II operations.

(6) The additional equipment necessary for a Category II approval consists of the flight control guidance system. This system can be either a flight director system or an automatic approach coupler. A flight director system needs only to present computed steering data for the instrument landing system (ILS) localizer and should present at least raw glideslope data on the same instrument as the localizer steering commands. A single-axis steering autopilot could be used if it coupled to the ILS localizer. In a practical sense, however, contemporary rotorcraft flight director and automatic pilot systems use at least two-axes command guidance or coupling, and some provide coupling or guidance in three axes; localizer, glidepath, and airspeed. A marker beacon system or a radio altimeter is required for operations with decision heights of 150 feet or less. A rotorcraft flight manual (RFM) supplement is required to define the configuration limitations and procedures for Category II operation.

b. Procedures.

(1) Instrumentation. Test instrumentation is required to provide a time history of the following parameters throughout each approach:

- Localizer deviation.

- Glideslope deviation.

- Radar altitude (if available).

These parameters can be acquired from the cockpit display for each one. The localizer and glideslope deviations are normally recorded as a microampere deviation from the centerline on a continuous strip recording. The radar altitude is continuously recorded as feet above the ground on the same recording device. Any type of recorder that produces a time history of these parameters throughout the approach would be satisfactory. However, a recorder that can be read during, or immediately after, each approach is recommended. This will allow the acceptability of the tracking during the approach to be determined immediately after each approach.

In addition to the above data, cockpit data should be hand recorded on a format similar to that shown in AC 91-16, Attachment 3 (figures AC 29 MG 3-1 and AC 29 MG 3-2).

(2) Systems Evaluation.

(i) The major portion of a Category II approval is the evaluation of the flight guidance system. To certify the flight guidance system for a specific model rotorcraft, a demonstration of 50 ILS approaches with a 90 percent success rate (as defined in Part 91) must be accomplished. If the flight guidance system has not been previously certificated in the rotorcraft, a certification program should be completed for the system before the Category II evaluation is started. It should be determined that the flight guidance system does comply with all the certification requirements before 50 ILS approaches. This is particularly true of an autopilot system where hardover malfunctions must be considered.

(ii) The equipment to be installed for Category II operations must meet the performance criteria specified in AC 120-29, Appendix 1. This material details the criteria for approval of airborne equipment and its installations to meet Category II performance. This appendix covers the rotorcraft flight manual, the systems ground tests, and the installation requirements and tests. Transport category rotorcraft should meet the same systems performance requirements as transport category airplanes.

(iii) The flight demonstration required for Category II system approval is explained in Part 91, Appendix A, Paragraph (e). The accuracy requirements for the tracking equipment are included in Appendix 1 of AC 120-29. The usual method of determining the tracking accuracy is by measuring the localizer and glideslope deviations in microamperes and printing them on a continuous strip recorder. The observed cockpit date should also be recorded on a form similar to that in AC 91-16, Attachment 3 (figures AC 29 MG 3-1 and AC 29 MG 3-2). Each approach made during the evaluation should have a complete set of data.

(iv) Coupler systems that require manual trimming by the pilot to center the AFCS actuators should be carefully evaluated, especially in turbulent conditions or gusty crosswinds. These systems may not meet the trim requirements at the 100-foot decision height or may not provide sufficient tracking accuracy without excessive pilot attention and workload.

(v) The effects of coupler system hardover malfunctions should be evaluated in all axes to determine the minimum decision height. The altitude loss that would occur from a nose down hardover at the decision height should be determined. This altitude loss should be included in the rotorcraft flight manual with the appropriate limitation on the minimum height above the ground for operation with the coupler engaged.

(vi) It is recommended that the demonstration approaches be made to Category II ILS facilities, although this is not required by either Part 91, Appendix A, or AC 91-16. Many Category I ILS installations do not provide good enough signals at the lower altitudes for the precise tracking required for Category II operations. In many cases, this is due to the effects of terrain or buildings off the approach end of the runway. Nevertheless, if satisfactory accuracy can be attained, all the approaches

required for a Category II approval may be made at Category I facilities. During the flight test, especially if simulated IFR conditions are used in good weather, the approach control and control tower of the facility being used should be advised that Category II operations are being conducted. The Category II ILS clear areas must be kept unobstructed to allow satisfactory ILS signals. The air traffic control agencies should assure that taxiing aircraft, airfield maintenance trucks, and other airfield traffic are kept out of the critical areas during the data-gathering approaches. These agencies can also monitor the ILS facility for proper operation to Category II standards and can advise the test aircraft if abnormal operation occurs.

(3) Rotorcraft Flight Manual. Upon satisfactory completion of an engineering inspection and test program, the FAA/AUTHORITY Rotorcraft Flight Manual (RFM), or supplements thereto, should reflect the following:

(i) The limitations, if any.

(ii) Revision to the performance section, if appropriate.

(iii) A statement of Category II approval to the effect that “The airborne instruments and equipment meet the performance standards for Category II approaches” and the following note:

“NOTE: Compliance with the performance standards referenced above does not constitute approval to conduct Category II operations.

CATEGORY II APPROACH EVALUATION

Pilot in Command _____ Second in Command _____ Date _____

Registration No. _____ Airport _____ Runway _____ Weather _____ Wind _____

FAA Inspector _____

This form will be completed whenever an approach is attempted utilizing the airborne low approach system, regardless of whether the approach is abandoned or concluded succesfully.

APPROACH EVALUATION

SAMPLE

1. Was the approach successful? YES ☐ NO ☐
2. Flight control guidance system used
   a. Auto-coupler ☐
   b. Flight director ☐
   c. If equipped and used, did a and b agree? YES ☐ NO ☐
   Second in Command? YES ☐ NO ☐
   FAA Inspector? YES ☐ NO ☐
3. Airspeed at middle marker ± ____ at 100' ± ____ from programmed speed?
4. If unable to initiate ☐ or complete ☐ approach (indicate which), was reason due to:
   a. Airborne equipment ☐. Identify and describe nature of deficiency.
   b. Ground equipment ☐. Identify and describe nature of deficiency.
   c. Approach control or tower request ☐.
   d. Other ☐. State reason.
5. Was airplane in trim at 100' for continuation of flare and landings?
   YES ☐ NO ☐
6. If approach and landing abandoned, state altitude above runway: _____
   feet (State reasons) _____
   _____
7. Quality of overall performance: Good ☐ Acceptable ☐ Unacceptable ☐

_____
Pilot in Command's Signature

FIGURE AC 29.MG 3-1

CATEGORY II APPROACH EVALUATION (cont.)

INDICATE GLIDESLOPE AND LOCALIZER DISPLACEMENT AT MIDDLE MARKER AND 100 FT. A.G. POINT

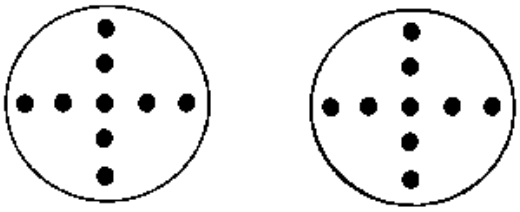

INDICATE AIRPLANE DISPLACEMENT & ORIENTATION WITH RESPECT TO RUNWAY CENTERLINE AT MIDDLE MARKER AND 100 FT. A.G. BY SYMBOL AT AIRPORTS AND RUNWAYS LISTED.

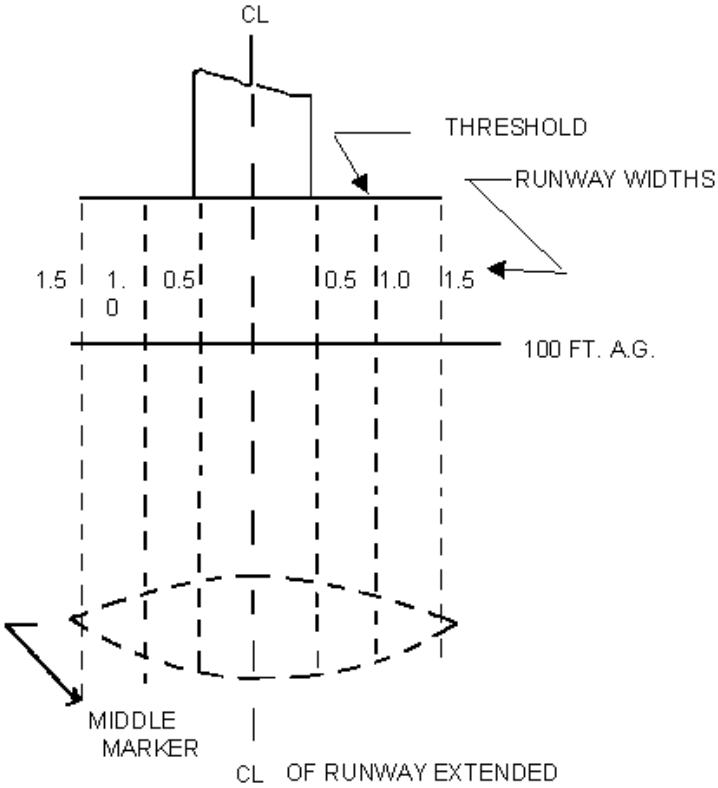

TOUCHDOWN WAS _____ FEET FROM THRESHOLD AND

FEET LEFT ▱ RIGHT ▱ OF CENTERLINE

REMARKS:

SAMPLE

FIGURE AC 29.MG 3-2

CHAPTER 3
AIRWORTHINESS STANDARDS
TRANSPORT CATEGORY ROTORCRAFT

MISCELLANEOUS GUIDANCE (MG)

AC 29 MG 4 FULL AUTHORITY DIGITAL ELECTRONIC CONTROLS (FADEC)

a. FULL AUTHORITY DIGITAL ELECTRONIC CONTROLS (FADEC) FOR INSTALLATIONS WITH CATEGORY A ENGINE ISOLATION.

(1) Background. The advent of “microprocessor technology” has resulted in rotorcraft engine controls being implemented by digital process control rather than by conventional means. These digital, processor-based full authority engine controls offer many performance advantages (such as isochronous governing) which were not feasible with conventional technology, pneumatic or hydromechanical controls. Because of the incorporation of this advanced technology, some additional considerations must be made of the engine installation to ensure regulatory compliance.

(2) Requirements. The following is a discussion of some special attention areas for a Part 29 Category A FADEC engine installation.
Paragraph AC 29.1309(b)(3)(ii)(D) contains a general definition of what constitutes a “full authority” control.

(i) Software Qualifications.

(A) Paragraph AC 29.1309f contains a general discussion on the use of the RTCA/DO-178B document that is used for the approval of system software. FADECs are generally developed to Level A software under RTCA document DO 178B based on the hazard category of the FADEC failure condition(s). However, if an applicant proposes a FADEC with Level B software based on the Functional Hazard Assessment results, this will require the proposal to be reviewed and approved by both the Engine Directorate and the Rotorcraft Directorate.

(B) RTCA/DO-178A may still be applicable for those FADECs that were previously developed and approved under DO-178A and the applicant is proposing to make changes to the FADEC software. However, if the applicant proposes to make changes to a DO-178A approved FADEC, the determination on whether the changes should be made under DO-178B or DO-178A will need to be made by the Engine Directorate and Rotorcraft Directorate. When utilizing DO-178A, one might arrive at the conclusion that the engine control, as a required function, is essential; therefore, level 2 software under DO-178A would be appropriate for the control functions. However, for this level 2 category software, errors are presumed to exist, and a software error in a full authority control could result in simultaneous unacceptable malfunctions in all engines. The provisions of

§ 29.1309(b)(2)(i) for continued safe flight and landing and the engine isolation rule, § 29.903(b), would generally preclude the use of this classification.

(C) System designs which provide redundant distinctive software or an alternate technology control which is automatically selected and meets all of the minimum regulatory requirements would reduce the impact of software errors and may allow the level 2; i.e., essential software classification. At level 1, it is accepted that the software is sufficiently error free that the software does not require further verification in the installation evaluation.

(ii) Lightning Strike Protection. Paragraph AC 29.1309(b)(3) contains a complete discussion of an acceptable method of demonstrating that the FADEC, as installed, is adequately protected against the catastrophic effects of lightning.

(iii) Electrical Power System Considerations.

(A) Normal Operation. The system should be evaluated with all power sources operating normally. If additional power source capability is being provided that is above the minimum required for certification, a certain portion of the evaluation should be conducted while operating in the minimum configuration. The minimum power source configuration should consider the provisions of § 29.903(b).

(B) Malfunction Conditions. Beginning with the minimum configuration that is required for certification, electrical power system malfunctions should be introduced and the impact on continued FADEC operation determined.

(C) Circuit Protection Location. The circuit protective devices for the FADEC should be located in the cockpit such that they can be readily reset or replaced in flight. The operation of the FADEC system is considered to be essential to safety in flight. Reference § 29.1357(d). The definition for “essential to safety in flight” is given in AC 29.1357b(4).

(D) System Separation. On multiengine applications, each system should be separated from the other system to the maximum extent practical. Wiring should be routed separately. Power should be taken from independent busses and grounds, and system components should be independent of one another.

(E) Periodic Checks. Where periodic checks are appropriate, they should be made at reasonable intervals. This would normally range from preflight checks for certain items of greater concern to a tie-in with normal aircraft maintenance intervals for other items. If a crew check is specified, it should be evaluated to ensure it is a reasonable check. If items to be checked are located in an area that can be covered by interior upholstery, for example, a crew check would not be considered reasonable, and further design considerations may be in order.

(iv) Powerplant Installation Considerations.

(A) A demonstration of compliance with § 29.901(c) would generally include a failure mode and effects analysis (FMEA) of the powerplant systems as installed. When a FADEC is utilized, the analysis would consider the control's failure modes, the installed engine reaction, the effect on the aircraft, and the crew response to the situation. Combinations of undetected failures should be considered. Engine failures which may be escalated in severity by the FADEC's response to the initial failure should be analyzed. Potentially hazardous failures should be evaluated during flight testing. The requirements of §§ 29.903(b)(2) and §§ 29.1309(b)(2)(i) should be reviewed in determining acceptability of failures.

(B) Section 29.903(b)(2), Category A engine isolation, is intended to ensure that a failure will not prevent the continued safe operation of the remaining engine(s) or require immediate action of the crew to ensure continued safe operation. The FADEC's of the individual engines should be independent. Where communication between FADEC's is required (for example, for torque sharing), care should be exercised to ensure that failures which may occur will not result in a power loss to the extent that total power available is less than would be available under OEI conditions. The no-required immediate-crew-action provision would preclude credit for manually selected or operated backup systems in meeting the § 29.903(b) rule. These unrequired backup systems, which may offer the advantage of get-home multiengine capability rather than forced OEI operation, would be evaluated on a no hazard basis.

(C) Section 29.939, turbine engine operating characteristics, intends a flight investigation to ensure that no adverse characteristics are present to a hazardous degree during normal and emergency operation in the allowed flight envelope. The evaluation should include assessment of the minimum FADEC system certification configuration; i.e., the minimum proposed by the applicant to meet Part 29 requirements. Reduced capabilities (e.g., restrictions on normal collective movements, limited aircraft maneuvers, etc.) may be acceptable for degraded FADEC modes or backup systems not required to meet Part 29 requirements if those degraded capabilities are reasonable and not hazardous as determined by flight evaluation. The restrictions should be specified in the flight manual.

(D) The rotorcraft with FADEC engines must of course meet all of the Part 29 requirements, but the areas described herein are those which deserve special attention.

b. <u>SINGLE CHANNEL FULL AUTHORITY DIGITAL ENGINE CONTROLS (FADEC) IN SINGLE ENGINE ROTORCRAFT APPLICATIONS.</u>

(1) <u>Background.</u> The purpose of this appendix is to provide guidance for compliance to Part 27 and Part 29 Category B regulations when the powerplant installation is a single engine fitted with a single channel FADEC system. The

application of single channel FADECs in single engine helicopters requires special considerations because this combination can have a higher probability of FADEC-related malfunctions that could result in loss of ability to execute a controlled power-on landing or operate safely throughout the flight envelope, relative to dual channel FADEC systems or multiengine installations. The issues that should be addressed by the applicant are criticality level of failures as determined from the engine system safety analysis (SSA), the resulting integrity requirements, capability to detect and present failure/fault data to the crew, and the ability of the crew to manage any failures/faults. The term “must” in this policy is used in the sense of ensuring the applicability of these particular methods of compliance when the acceptable means of compliance described herein is used. This policy establishes an acceptable means, but not the only means of certifying a single channel FADEC for single engine application.

(2) Definitions.

(i) Fault or Failure. An occurrence which affects the operation of a component, part, or element such that it can no longer function as intended (this includes both loss of function and malfunction).

(ii) Integrity. The term “integrity” for the purpose of this policy includes the hardware reliability requirements as well as the software level requirements commensurate with the system criticality.

(iii) Single Channel FADEC. A single channel FADEC system is one which provides full authority control of the engine from below ground idle to 100 percent power and in some cases from engine start similar to more complex dual channel redundant FADEC systems, but without a fully capable second channel providing a dual redundant system. The backup for the single channel FADEC is provided by a less capable channel either by hydromechanical or electronic means, usually for “get-home” purposes rather than for dispatchability.

(3) References. FAR paragraphs 29.901, 29.903, 29.927, 29.939, 29.1143, 29.1309, 29.1581.

(4) Related Documents.

(i) Federal Aviation Regulations (FARs) paragraphs 21.21, 29.1301, 33.28, 33.75

(ii) FAA Advisory Circular AC 27-1B

(iii) Standards - Latest revision of RTCA/DO-178 and RTCA/DO-160; SAE documents

(iv) ARP4754 and ARP4761

(5) Design Requirements for Compliance with FAR 29.901. FAR paragraph 29.901(b)(2) requires that each component of the installation be constructed, arranged and installed to ensure its continued safe operation between normal inspections or overhauls. FAR paragraph 29.901(c) requires that no single failure or malfunction of the powerplant control system will jeopardize the safe operation of the rotorcraft. For an engine with a single channel FADEC some form of redundancy is needed to ensure the continued safe operation of the rotorcraft in the event of a random complete failure. This redundant system must be accessible and provide the pilot with the ability to perform a controlled power-on landing. In addition, FAR paragraph 29.939(a) requires that turbine engine operating characteristics be investigated in flight. Flight tests are required as noted below to demonstrate compliance with the FAR requirements. The following paragraphs provide guidance for meeting these general design requirements.

(i) Redundancy: Because of the random nature of electrical/electronic component failures, there is no assurance that the electronic systems will operate safely between established inspection periods. Therefore, some redundancy technique should be applied to the electrical/electronic part of the FADEC system to reduce the probability of losing the ability to land safely or continue safe flight. This redundancy is usually provided by some form of backup system or alternate method of control of the engine. The requirement for a backup system can be achieved with a number of approaches that include a simple mechanical/hydromechanical system, a simple electrical/electronic system that is not a completely redundant channel, or a completely redundant system.

(ii) Availability: A means must be provided either by system design or operational procedures to ensure that the primary and the backup or alternate system are available functionally to serve the intended purpose. The manufacturer's required interval for testing the backup or alternate system should be based on the expected failure rate established during the failure analysis of the system. However, the pilot should have the capability to test the backup system at the pilot's discretion. Additionally, failure of the primary system must not affect the safe operation of the backup or alternate system.

(iii) Capability of back-up system: Section 29.1143 requires that each power control provide a positive and immediately responsive means of controlling its engine. Additionally, § 29.903 requires that the powerplant systems associated with engine control systems are designed to give reasonable assurance that the engine operating limitations will not be exceeded in service. Although back-up control may be somewhat degraded, the system should allow for control of the engine and the aircraft within their operating limits. It should be demonstrated that upon failure of the primary control the aircraft can continue to be operated safely and execute a controlled power-on landing without creating an undue pilot workload. This includes demonstration of the ability to maintain rotor speed within

acceptable limits while transitioning to the backup mode and while using the backup control.

(iv) Ability of crew to switch to back-up: If crew action is required for switching to the back-up mode, this ability must be demonstrated during all phases of flight from any seat which may be occupied by the pilot in command or the copilot. The process to be used by the pilot to switch to the back-up mode should be clearly described in the Rotorcraft Flight Manual (RFM) as required by FAR paragraph 29.1581.

(v) Transfer to backup: The transfer to the back-up mode from the primary control mode or an intermediate mode (fixed position) must occur without excessive time delay or variation in power. Time delays and power variations experienced during the transfer should be evaluated during flight test for acceptability. A means should be provided to alert the pilot that transfer to the back-up mode has occurred.

(vi) Annunciation: Adequate annunciations should be provided to cue the crew of faults/failures and/or transfer of engine controls. These annunciations are of visual and aural types and must be distinct as to purpose and should not be misleading, especially under any fault/failure. Flight evaluation of these annunciations is required before final acceptance can be made.

(vii) Automatic Transfer: If the system is designed to accomplish automatic transfer between control modes, the transfer should occur without excessive variation in power and a means should be provided to alert the pilot that transfer to the back-up mode has occurred. Multiple automatic transfers between control modes may cause aircraft instability. A method to lockout the primary control after its initial failure and automatic transfer to the backup should be provided. If pilot reset is to be allowed, the procedure should be described in the RFM.

(viii) Calculated failure rate (with unannunciated faults present): Before a calculation of the failure rate can be attempted, the failure should be defined. The determination of failure rate, using the definition of failure, can be the product of a Failure Mode Effects Analysis (FMEA) combined with a reliability analysis, using individual part reliability figures. The figures should come from some recognized data base. The failure rate calculations should consider the worst case application limitations such as flight operation, environmental considerations, and time of operation. The flight operations to be considered for the worst case scenario include all flight segments (take off, cruise, hover, landing, etc.) together and separately for the various missions the aircraft is expected to be used in. Another way to determine failure rate is to use service history. However, service history is applicable only if a high degree of similarity exists for the FADEC and its installed application. The calculated failure rate is the direct result of the FMEA, and should

meet the integrity level requirement determined by the Functional Hazard Assessment.

(6) Certification Approach:

(i) Analysis Requirements: Functional Hazard Assessment: Compliance to the requirements of FAR paragraphs 29.1141 and 29.1309 for a single channel FADEC in a single engine application should be based on criticality of application for the system under consideration. This criticality of application may be determined by performing an aircraft level hazard assessment that starts with the type of possible failures and ends with the results of these failures. The results can be categorized into criticality levels and the required integrity levels can be obtained by matching the required integrity level to the criticality level. The main emphasis should be on determining the higher levels of criticality (Major and above) and their source. This process should include consideration of failures seen at the operational level and interaction of the failures with the airframe and crew as well as the system itself. The following subject areas are related to this assessment.

(A) Assumptions: Assumptions should be made about the airframe/crew interface in order to perform the aircraft level hazard assessment. These assumptions are prerequisites to perform an aircraft level hazard assessment and must be listed in this hazard assessment and validated by airframe testing when the airframe is available. If the assumptions cannot be validated, the actual airframe test data must be substituted for the invalidated assumptions (assumed prerequisites) and the hazard assessment re-evaluated with the new data supported prerequisites. The results of this new assessment would be the deciding factor for acceptance of the FADEC system for the installation as designed or provide the necessity for design changes.

(B) Criteria: Acceptance of an engine fitted with a single channel FADEC system in a single engine rotorcraft application requires that the integrity levels of the FADEC system be compliant with the criticality levels determined by the aircraft level Functional Hazard Assessment (FHA). In addition, final acceptance of the system at the aircraft level for the application is based on the integrity level(s) that match the criticality level(s) determined by the hazard assessment that uses data that has been validated during the aircraft flight test program. These assumptions/prerequisites would include operational aspects associated with the possible FADEC failures and would include as a minimum the following:

(1) Crew/aerodynamic response to failure.

(2) Worst case flight operation for failure to occur. (Landing, IFR, etc.)

(3) Duration of flight operation (exposure time).

(4) System interaction with shared Inputs/Outputs with other systems and/or with back-up systems.

(5) Adequate annunciation of failure.

(ii) Validation Criteria:

(A) General:

(1) Validation of the assumptions/prerequisites made by the engine manufacturer in developing the SSA, using aircraft level FHA requirements, must be validated by conducting flight testing during the certification of the installation. The possibility exists that if the assumptions cannot be validated during flight testing, then engine and/or FADEC redesign may be required.

(2) Failure management methods that are related to operational characteristics should be addressed. It should be determined that the FADEC/engine manufacturer's envisioned failure management is desirable and compatible with the operational requirements. Therefore, the following basic FADEC related information should be identified:

(i) The detected failures.

(ii) The failures that are not detected.

(iii) The action that the FADEC takes when failures are detected.

(iv) The failures that are annunciated to the crew and in what manner.

(v) The anticipated operational action required as a result of detected failures.

(vi) Possible operational results of the undetected failures.

(vii) Verification that the assumed worst case flight operation is the worst case.

(B) Manual Backup: Additional aircraft operational testing is required to specifically evaluate the manual backup system for compliance with the FAR requirements. The acceptability of the manual backup system depends substantially on its installation and interface with the airframe. The following items need to be demonstrated in accordance with § 29.927 and § 29.939 or accomplished on each application prior to the acceptance of the manual backup system:

(1) It should be demonstrated by flight test with the failure of the primary engine control, that the aircraft can be flown and a safe and controlled power-on landing executed without creating an undue pilot workload.

(2) It should be demonstrated by flight test that switching between control modes will not create an unsafe condition during any phase of operation within the aircraft operating envelope.

(3) The pilot action required as a result of a failure of the primary control and used as an assumption in the FHA and FMEA should be validated during flight tests and listed in the emergency procedures section of the flight manual.

c. FADEC RELIABILITY REVIEW DUE TO INCREASED ROTORCRAFT ENDURANCE

(1) Background. This advisory material is to provide guidance for reevaluation of the FADEC control system reliability due to extension of the aircraft mission endurance. During the initial type certification of an aircraft, an analysis is normally conducted on systems to determine their criticality category (e.g. catastrophic, hazardous, major, etc.) and reliability requirements. To establish a system's reliability, an exposure time is determined by making certain assumptions. In most cases, the exposure time is the average endurance based on the various flight scenarios in which the aircraft is to be used. When an aircraft's expected mission endurance is increased by adding fuel capacity, a new analysis for system reliability should be conducted taking into account the new increased mission endurance.

(2) Requirements.

(i) If the applicant has access to the initial analysis used for the type certification, one method to accomplish the new reliability analysis is by multiplying the exposure time used in the original reliability analysis by the ratio of the increased maximum endurance to the original maximum endurance. That is, if the aircraft endurance increases by 50 percent due to additional fuel capacity, the assumed exposure time should also increase by 50 percent. The applicant should then rework the analysis using this new exposure time.

(ii) If the applicant does not have access to the initial analysis it will be incumbent upon them to provide the rationale used for determining the new exposure time and to provide a complete analysis for the systems determined to be critical. The FAA engineer should compare this new analysis to the original.

d. CERTIFICATION GUIDELINES FOR COMPLIANCE TO THE REQUIREMENTS FOR ELECTROMAGNETIC COMPATIBILITY (EMC) TESTING FOR NON-QUALIFIED EQUIPMENT AND EQUIPMENT KNOWN TO HAVE A HIGH POTENTIAL FOR INTERFERENCE WHEN INSTALLED ON ROTORCRAFT WITH ELECTRONIC CONTROLS THAT PROVIDE CRITICAL FUNCTIONS.

(1) Background.

(i) Rotorcraft operations are varied and use a wide assortment of equipment. While some of this equipment is qualified to aircraft standards, particularly environmental standards, some of the equipment not qualified to such standards may be the source of harmful electromagnetic interference. Rotorcraft typically have not had electronic controls that perform critical functions, such as engine controls and flight controls and therefore there was no real concern about requiring equipment to be qualified to aircraft standards. Typically, this equipment was installed with only a cross matrix operational check for EMC. These tests consisted of operating the equipment in question and checking visually for an indication of interference. The equipment was, for the most part, non-required equipment and the primary concern was that interference may be emitted from the equipment.

(ii) Many more recent rotorcraft designs are using electronic engine controls, and fly-by-wire may be implemented in the near future, thus unqualified equipment and their effects on critical aircraft systems are a particular concern. Additionally, the physical proximity of unqualified equipment to the Full Authority Digital Engine Controls (FADEC) is inherent due to the size of most rotorcraft and represents greater potential for interference than for larger fixed wing aircraft.

(2) Requirements.

(i) The rules to assure that required functions are not subject to interference are provided in the certification basis for the rotorcraft. Although the certification basis may differ between aircraft, the requirements that address electromagnetic interference are quite similar and result in the same methods for compliance. A note has been added to type data sheets for rotorcraft that employ FADEC. This note was added to remind all modifiers that the requirement for addressing interference exists and that special test considerations must be addressed to show compliance. Most EMC considerations can be addressed by the operational interference checks addressed in the background discussion. However, when a critical function is electronically provided, additional special test considerations should be addressed, in addition to the previously described EMC tests. The determination of when these other, more rigorous tests are required is a simple concept, but complex in practice. More rigorous testing is required to satisfy the concern for the installation of equipment that would interfere with the FADEC's control or failure management. There are two types of equipment installations that would cause this concern. The first type is equipment known to have a potential to interfere and may or may not be qualified to an aircraft standard, such as HF radios, high powered radars, hoists,

transmitting antennas located near the controls systems, etc. The second type of equipment does not have a high potential to interfere and is not qualified to an aircraft standard. It is important to determine if an acceptable environmental qualification test for ElectroMagnetic Interference (EMI) has been conducted for this equipment. The concern associated with this equipment is the interaction with the electronic control, and it should be determined if the equipment has been tested to an acceptable standard. One acceptable standard is the RTCA document DO160 (latest revision), Section 21, Category Z for EMI, but there also may be other acceptable standards. If there is a question of the acceptability of a standard, the applicant should contact the FAA. Lower levels of testing may be accepted, if there is additionally some favorable installation test data. This acceptance of lower level testing plus some additional installation test data will be evaluated on a case-by-case basis.

(ii) Accomplishment. In addition to the following special testing considerations, all installed equipment should be tested for EMC by operating all equipment under consideration and observe that no hazard is created by interference to required equipment.

(A) Class of Equipment - Equipment Known to Have a High Potential to Interfere: This class of equipment should be tested in the installation as described in the “Installation Test” paragraph below. Since the concern of this class of equipment is its “high potential for interference, its qualification is not a factor to preclude the requirement for testing. The type of equipment will determine if ground testing alone is sufficient; however, due to the high power nature of this class of equipment, flight testing is usually required. Kinds of equipment in this class are HF radios, high powered radars, hoist, etc.

(B) Class of Equipment - Not Qualified to Acceptable Interference Test Standard: Once it has been established that unqualified equipment is proposed to be installed, then one of two methods to show compliance may be implemented. One method is to laboratory test the unqualified equipment to an acceptable standard for EMI, such as RTCA DO160 (latest revision), Section 21, Category Z. The other method is to test the unqualified equipment in the installation as described in the “Installation Testing” (paragraph (4) below) to determine if it is a source of interference to the critical control (FADEC, Fly-By-Wire).

(iii) Laboratory Testing. Laboratory testing to the RTCA standard DO160 (latest revision), Section 21, Category Z is an example of one of the options to satisfy the interference concern for the unqualified equipment, providing the equipment does not fall into the class of equipment that is known to have a high interference potential. Testing the unqualified equipment in the laboratory will require an FAA-approved test plan and some type of conformity to identify the test article. Conformity should at least consist of conformity by the vendors’ description/drawings and functional specifications. Most equipment of this type should be conformed to a serial number as well as part number since there is a high probability that the production changes are not documented under a controlled system. However, if reasonable assurance can be

provided that other equipment of the same part number is identical to that tested, then credit for the test can be issued.

(iv) Installation Testing.

(A) Installation testing is one method to show compliance for unqualified equipment that does not have a high potential to cause interference. For interference considerations, installation testing is the only method of testing to show compliance for the class of equipment known to have a high interference potential such as HF radios, high powered radars, hoists, antennas located 0.5 meters or closer to the FADEC or other control, transmitting systems, etc.

(B) To accomplish the installation tests, there should be an FAA approved test plan that requires the unqualified equipment or high interference potential equipment to be operated through all reasonable modes of operation, to determine if electromagnetic interference is entering the control system. Installation testing consists of interrogating the control, if it has such a feature, to determine if the control system is adversely affected (identify the recorded faults that occur during the test). Additionally, real-time monitoring of the control's input parameters should be accomplished. The pass/fail criteria is "no detected interference" for a pass state and conversely a fail state if any interference is detected entering the control. If interference is detected, the source of interference should be investigated to determine if the detected interference is the worst case. In some cases, the detection of interference may result in flight tests being required to determine if the interference is worse in flight. After the worst case is defined, the interference must be eliminated at the source, or the interference must be evaluated to assure that the control, its functions, and its related indications do not result in an unsafe condition. For FADECs, special test equipment developed by the engine manufacturer will be required to interrogate and monitor the parameters. Other type critical controls may also require special test equipment to perform this type of testing.

(C) Installation Test Conditions: When installation tests are required, ground tests are sufficient except for the type of equipment that is identified as a "known" potential for interference and other equipment that either requires large currents to operate or radiates strong electromagnetic fields, especially equipment that is prohibited to be operated on the ground. Examples of the type of equipment "known" to possess interference potential are HF radios, high powered radios, hoists, installation where radio transmission antennas are in close proximity to the FADEC, etc. Examples of the other equipment that require large currents to operate or radiate strong electromagnetic fields are some EMS equipment, night sun lights, some air conditioners, video and sound systems that require large currents (25 amps and up) to operate, FLIRS, some forward looking radars, some weather radars, some communication systems that transmit 30 watts or more, and some data link transmission systems. This type of equipment represents the main concern for radiated and inductive interference; therefore, ground and flight tests should be conducted. Tests for conductive interference should be conducted for all other

unqualified equipment. Tests for conductive interference may be performed by ground tests, using the same techniques as previously described. Another exception to installation testing is, if the equipment has been tested in relation to the critical control on another installation and the installation under consideration can be shown to be identical. The data showing identicality of equipment and installation with passing test data are acceptable in place of further testing on the same type rotorcraft.

(3) Summary. The concern for potential interference to the FADEC or any other critical control may be addressed by the methods contained within this document. To address the interference aspects of unqualified equipment, the equipment must either be laboratory tested or tested as a part of the installation. Ground testing for the most part is sufficient, except for certain equipment with a high potential to cause interference. Other equipment, that may or may not be qualified, should be ground and flight tested if there are operational limitations on the ground or it fits the “known” potential to cause interference.

CHAPTER 3
AIRWORTHINESS STANDARDS
TRANSPORT CATEGORY ROTORCRAFT

MISCELLANEOUS GUIDANCE (MG)

AC 29 MG 5. AGRICULTURAL DISPENSING EQUIPMENT INSTALLATION.

NOTE: This paragraph has been extensively revised and expanded to clarify the restricted category certification of agricultural dispensing equipment installations on rotorcraft.

a. Explanation. In the early development of the rotorcraft one of its primary usages was agricultural operation. The FAA recognized that the existing requirements, which were designed primarily to establish an appropriate level of safety for passenger-carrying aircraft, imposed an unnecessary economic burden and were unduly restrictive for the manufacture and operation of aircraft intended only for use in rural, sparsely settled areas. Therefore, a special document that established new standards for agricultural dispensing equipment and other special purposes was developed. Restricted Category CAM 8 became effective October 11, 1950.

(1) During the recodification of 1965, CAR 8 ceased to exist as a regulatory basis and selected portions addressing certification were incorporated into FAR 21. While the specific standards in CAR 8 were not changed substantially when adopted into FAR 21, the less restrictive philosophy of CAM 8 and the policy material that was stated in the preamble to CAM 8 were not clearly conveyed.

(2) Advisory material published in 1965 and revised in 1975, summarized the information contained in the advisory portions of CAM 8. This new advisory material indicated that the CAM advisory material would be applicable to the related FAR's. Unfortunately, this document specified that CAM 8 could be used in conjunction with certain FAR's for restricted category certification of small agricultural airplanes only. Rotorcraft were omitted.

(3) A survey of restricted category rotorcraft projects related to agricultural modifications indicates that the CAM 8 philosophy was interpreted to allow the use of AC 43.13-2A structural criteria for most STC's issued through the early 1980's. Since then more restrictive guidance based on CAR 6 and FAR 27 requirements has been applied by some ACO's to several STC applications. Since the more restrictive guidance imposed a significant economic burden on the industry, the HAI requested a meeting with the FAA during the 1990 annual convention in Dallas. As a result of the meeting, an Action Notice to clarify the interpretation of FAR 21.25(a)(1) for restricted category aircraft has been issued.

(4) The following advisory material is a result of a reassessment of past and present policy.

b. Procedures. The certification basis for agricultural dispensing equipment in the restricted category is FAR 21.25(a)(1) as interpreted by Action Notice 8110.22. The accountable Directorate guidance for the substantiation requirements for rotorcraft is as follows:

(1) Substantiation of the agricultural dispensing system hoppers or spray tanks to the load factors provided in figure AC 29 MG 5-1 provides for proof of structure. The load factors of figure AC 29 MG 5-1 address the critical structural load conditions of dispensing equipment mounted in or near the fuselage and provide adequate margins of safety.

FIGURE AC 29 MG 5-1
ACCEPTABLE ULTIMATE LOAD FACTOR FOR
AGRICULTURAL DISPENSING EQUIPMENT DESIGN

	UP	DOWN	SIDE	FORWARD	AFT
Tanks & Equipment Mounted In Or Near The Fuselage	1.5g	4.0g	2.0g	4.0g Note 1	- - - -
Spray Booms	1.5g	2.5g	- - - -	Note 1	2.5g Note 2

Note 1: An ultimate load factor of 2 G's is acceptable for externally side or under fuselage mounted tank and forward mounted spray booms where failure in a minor crash landing will not create a hazard to occupants or prevent exit from the rotorcraft.

Note 2: The aft loads for spray booms may be developed by the applicant based on the 111 percent of V_{NE} for which certification is requested or the load factors of figure AC 29 MG 5-1, whichever is greater.

(2) The applicant may elect to substantiate his/her product by either static or dynamic testing, by analysis, or any combination thereof.

(3) Lower load factors may be used only when justified by manufacturer's data, rational analysis, or actual rotorcraft flight and ground load demonstrations.

(4) Tank pressure test, while not mandated, is recommended for safety reasons. An acceptable procedure is included in paragraph AC 29 MG 5(c)(4).

(5) Dispensing equipment installation attach points. If attach points exist which are an integral part of the rotorcraft and these attach points have been certified to the standard category requirements no further substantiation of the attach point is required

if an analysis indicates the dispensing system does not impose loads which exceed those for standard category certification.

(6) Ground clearance for dispensing equipment installation. A 5-inch ground clearance has typically been used for skid gear equipped rotorcraft which incorporate belly mounted supply tanks/hoppers or systems which have dual side mounted supply tanks/hoppers and the design incorporates cross tubes or other system components which are located beneath the bottom of the fuselage when these components are rigidly attached to the airframe structure. The 5-inch dimension is measured vertically from the ground to the lowest point of the installed system, with the rotorcraft in its operational configuration and gross weight (including disposable load) and while resting on a smooth, level asphalt surface. For rotorcraft equipped with wheels and/or landing gear struts, the maximum system deflections should be considered when determining the 5 inches of acceptable static ground clearance. The 5-inch ground clearance would only apply to original configuration of newly manufactured rotorcraft. However, a 3-inch ground clearance has been found acceptable and may be approved for skid gear equipped rotorcraft to account for the in-service permanent set allowed for skid gear members, (i.e., cross tube deflections allowed per the maintenance manual). Cable supported systems, (i.e., cargo hook installations) or dispensing systems utilizing flexible ducts (certain types of dry material dispensing equipment which may or may not be retractable) have been approved even though portions of the system may contact the surface during a normal landing.

(7) A number of rotorcraft are approved for external cargo operations that allow a gross weight higher than the approved internal gross weight limit. This difference is usually due to the allowable weight limit restriction of the landing gear. (The gear is not approved for the higher weight.) Those types of dispensing equipment, that can be loaded in flight to a weight that exceeds the allowable limit of the landing gear should incorporate a reliable means that rapidly reduces the total aircraft gross weight to within allowable landing gear limits. In most cases, this will involve jettison of the disposable load. The time interval for this operation should be demonstrated, and should not exceed a recommended 3 seconds from a level flight condition.

(8) A flight check or demonstration of the agricultural dispensing equipment installation is normally conducted. This flight check should also qualitatively determine that no hazardous deflection or resonance in the rotorcraft or dispensing system exists. This flight check should be conducted in accordance with the requirements of FAR 133.41.

(9) For rotorcraft certificated in dual categories, the inspection requirements of FAR 21.187(b) must be observed when converting from restricted to normal category.

c. Acceptable Means of Compliance.

(1) Analysis Method. Structural analysis (static) may be used if the structure is of a configuration for which experience has shown the method to be reliable. Structural

substantiation of tanks that are designed to contain liquid materials may be accomplished by pressure testing. For tanks or hoppers designed to contain dry material, (e.g., dust or fertilizer) static load tests may be used to verify structural integrity. The tank/hopper, mounting hardware, and support structure should all be substantiated to the load conditions specified by this paragraph considering the effects of internal fluid pressures when applicable.

(2) Static Tests. Static tests of tank/hoppers, mounting hardware, and support structure for each critical load condition may be accomplished using conventional techniques; such as, dead weight loading, whiffletree systems, and hydraulic rams. If tests of the tank and its mounting hardware are conducted using a test fixture representing the rotorcraft, the rotorcraft support structure may be substantiated independently by means of test and/or analysis. Static test loads should be applied in combination with associated internal fluid pressure loadings. The ultimate loads specified in paragraph AC 29 MG 5 should be sustained for at least 3 seconds without failure.

(3) Dynamic Tests.

(i) If the applicant elects to test to the load factors noted herein, the maneuvering and gust loadings will be considered to be adequately substantiated. For each condition, the critical volume and density of fluid should be used.

(ii) The tank and mounting hardware should support ultimate loads without detrimental permanent set or failure, respectively. The rotorcraft support structure may be included in the dynamic tests, or it may be substantiated separately via static test and/or analysis for each condition specified by this paragraph.

(4) Pressure Testing. Internal pressure loads may be applied using the water standpipe technique. Standpipe water height should be accurately computed for each critical spray tank static test loading. Pressure testing of spray tanks is not absolutely essential but is recommended for safety reasons. This testing will also determine whether the joints and connections are tight and will not leak in addition to determining any weak spots in the construction. Where spraying is done with highly volatile and flammable liquids, or where the tank has a return line, such as in an engine oil tank where the fluid is pumped back into the tank, it is recommended that the tank be tested for a pressure of 5 pounds per square inch. For other liquids, and where no fluid return line is used, testing to 3 ½ pounds per square inch should be satisfactory. There are many ways of pressure testing a tank, however, it is believed that the simplest and easiest method is to fill the tank with water and use a standpipe filled with water. A 1 1/8-inch pipe can be connected to the venting tube or one adapted to the filler opening. In either case the height of the pipe would be the same. For a 3 ½ PSI test of the tank the height of the water in the pipe would only need to be 8 feet and for a 5 PSI test only an 11 ½ -foot height of water will be needed.

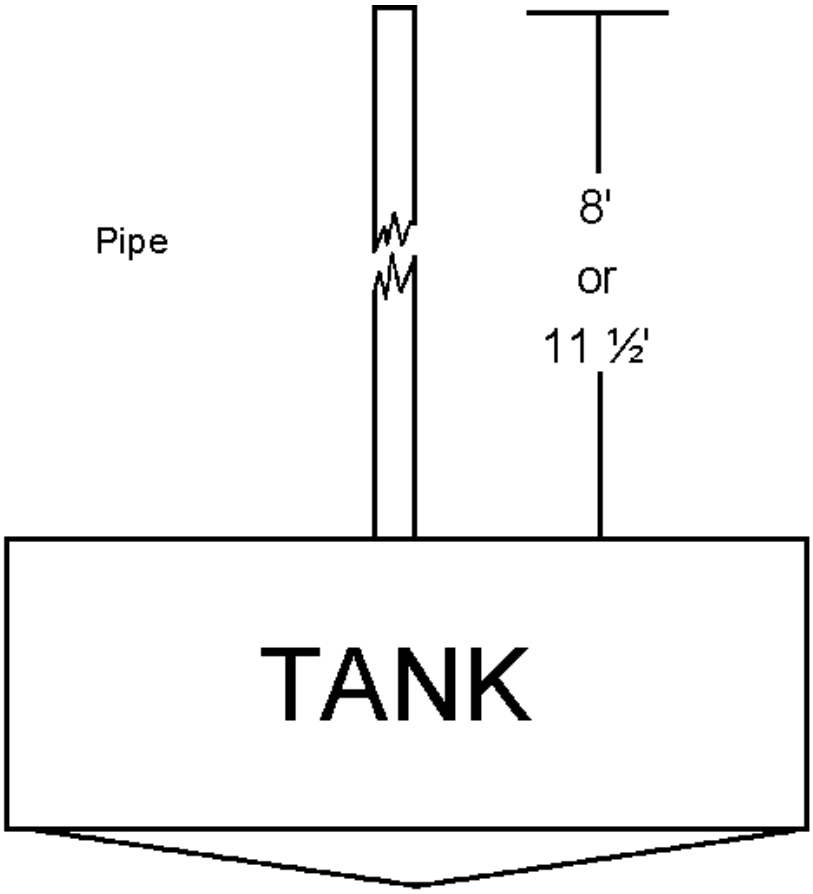

Figure AC 29.MG 5-2 Sketch of Tank Pressure Test

CHAPTER 3
AIRWORTHINESS STANDARDS
TRANSPORT CATEGORY ROTORCRAFT

MISCELLANEOUS GUIDANCE (MG)

AC 29 MG 6. EMERGENCY MEDICAL SERVICE (EMS) SYSTEMS, INSTALLATIONS, INTERIOR ARRANGEMENTS, AND EQUIPMENT.

a. Explanation. This paragraph pertains to EMS configurations and associated rotorcraft airworthiness standards. EMS configurations are usually unique interior arrangements that are subject to the appropriate airworthiness standards, FAR Part 29 or its predecessor CAR Part 7, to which the rotorcraft was certificated. No relief from the standards is intended except by § 21.21(b)(1) and exemption. EMS configurations are seldom, if ever, done by the original manufacturer.

(1) The FAA/AUTHORITY has not specified in the airworthiness or operating rules the minimum equipment for an EMS configuration. Whatever equipment is presented for evaluation and approval is subject to compliance with the airworthiness standards. Any equipment that is not essential to safe operation of the aircraft is evaluated for a “no hazard approval,” i.e., it is optional equipment and may be approved provided the use, operation, and possible failure modes of the equipment are not hazardous to the aircraft. Safe flight, safe landing, and prompt evacuation of the rotorcraft, in the event of a minor crash landing, for any reason, are the objectives of the FAA/AUTHORITY evaluation of interiors and equipment unique to EMS.

(i) For example, a rotorcraft equipped only for transportation of a nonambulatory person (a police rotorcraft with one litter) as well as a rotorcraft equipped with multiple litters and complete life support systems and two or more trained attendants/medical personnel may be submitted for approval. These configurations will be evaluated to the airworthiness standards appropriate to the rotorcraft certification basis.

(ii) Transport rotorcraft should comply with many flightcrew and passenger safety standards which dictate features of the basic certified rotorcraft which are related to the interior arrangement, to the doors and emergency exits, and to occupant protection. Compliance with the airworthiness standards results in an emergency interior lighting system, placards or markings for doors and exits, exit size, exit quantity and location, exit access, safety belts, and possibly shoulder harnesses or other restraint or passenger protection means as a part of a rotorcraft type design. The features, placards, markings and “emergency” systems which are required as a part of the type design should be retained unless specific replacements or alternate designs are necessary for the EMS configuration to comply with the airworthiness standards.

(2) Many EMS configurations of transport rotorcraft are equipped with the following:

(i) Attendant/medical personnel seats which may swivel.

(ii) Multiple litters, some of which may tilt.

(iii) Medical equipment stowage compartments.

(iv) Life support and other complex medical equipment.

(v) Incubators for infants.

(vi) Curtains or other interior light shielding for the flightcrew compartment.

(vii) External loud speakers and search lights.

(viii) Special internal and external communication radio equipment.

b. Procedures.

(1) General.

(i) Original type design information and criteria may or may not be available from the manufacturer. This may be “public,” not proprietary, information that is pertinent for interior modifications. It may be appropriate to include “standard” features, placards, and markings for the rotorcraft type design by reference in the applicant’s modification design data.

(ii) The EMS modification presented for approval usually contains equipment of one manufacturer’s model or design. The type design of the modification will have features to power and restrain the equipment, maintain the rotorcraft systems integrity, and to otherwise protect the occupants. See paragraph b(15) which refers to equipment substitution.

(2) Evacuation and Interior Arrangements. Access to the emergency exits/doors from any location in the cabin/compartment, access to and use of the exit/door opening means or release device, and the unobstructed area of the “standard” or type design exit are potential problems that should be addressed in the early design stage. Multi-litter arrangements may be especially critical.

(i) The operation or use of devices for locking the position of swivel seats, etc., and for rapid installation and removal of litters (incubators, etc.) should be labeled unless they are simple and obvious, and do not require exceptional effort. The design features of the device(s) and the seat and/or litter will influence the extent of information in any label necessary to insure proper and safe installation for routine use and for prompt evacuation when appropriate or necessary for the interior arrangement. The requirement for labels or markings (instructions, etc.) that applies to operation of

seat or litter features, release devices, etc., is not relieved even if trained attendants are necessary for an evacuation as discussed in paragraph c(2)(v). Placards or instruction cards that contain evacuation procedures do not necessarily contain detail procedures for individual seats, litters, and so forth. Release devices that are simple and obvious and do not require exceptional effort are recommended. For example, a single central control for litter release would be preferred over multiple action release devices. Seats and litters which require multiple actions or steps to position or release for an emergency evacuation for the effect on achieving a rapid evacuation determines it is acceptable after minor crash landing may be acceptable if an evaluation determines it is acceptable.

(ii) The passenger compartment or cabin should not be partitioned to impede access to the exits. A person seated in the compartment should have access to each exit in the compartment. All persons must be able or have provisions to rapidly clear (evacuate) the rotorcraft as specified in § 29.803(a). A demonstration or a "walk-through" of appropriate procedures may be necessary to assure the means and procedures are feasible and adequate. In certain designs and arrangements, an evacuation demonstration may be necessary to prove questionable interior and emergency exit/door arrangements.

(iii) Although not a standard, 90 seconds to clear the rotorcraft exits should be used as the time interval whenever an evacuation demonstration is dictated. Attendants and the flightcrew, trained in the evacuation procedures, may be used to remove the litter patients. It is preferable for the patient to remain in the litter; however, the patient may be removed from the litter to facilitate rapid evacuation through the exit. The patients are not ambulatory during the demonstration. The demonstration may be conducted in daylight with an upright rotorcraft. Exits on one side (critical side) should be used. Exits on the other side are blocked (possibly by a fire).

(iv) Special evacuation procedures and trained attendants may not be required for simple and obvious means of evacuation for a single litter. Procedures may be prominently displayed in durable markings, placards, cards, and condensed or summarized in the emergency procedures section of the Rotorcraft Flight Manual (RFM) or an EMS configuration RFM supplement.

(v) If any medical attendants are required for evacuation, the attendants should be trained in these procedures and listed in the Limitations section of the RFM or a supplement as a required crewmember. If attendants are not essential for safe rotorcraft operation or rapid evacuation, then an attendant is not a required crewmember.

(3) Restraint of Occupants and Equipment. The minor crash conditions specified in § 29.561(c) usually dictate all but the vertical (down and possibly up) load conditions. The flight and landing loads, such as +3.5g limit (flight) vertical override the minor crash loads when they are larger. See paragraphs AC 29.561 and AC 29.785 for further information.

(i) Whether seated or recumbent, the occupants must be protected as prescribed in § 29.785. Swivel seats and tilt litters may be used provided they are substantiated for the appropriate loads for the position selected for approval. Placards or markings may be used to assure proper orientation for flight, takeoff, or landing. The seats and litters should be listed in the type design data for the configuration. See paragraph (b)(15) for substitutions.

(ii) For recumbent occupants, harnesses, straps, a padded headboard, a diaphragm, or safety belts may be used if adequate for the forward and lateral loads of § 29.561(c). Harnesses/straps are recommended, however. When harnesses/straps are used, they should prevent the occupant from significant forward motion (4 g condition) that would remove the support from the head as well as the shoulder for "head down" motion. Infants in incubators should be similarly protected by padding and containment within the incubator and the incubator restrained for the load cases noted. If the infant is strapped to a removable platform, the platform and infant should be properly restrained within the incubator for the load cases noted. The incubator should be listed in the type design data for the configuration.

(iii) Incubator materials are subject to the flammability standards of § 29.853. Evacuation procedures should include incubators if a part of the interior.

(iv) Galleys, medical supplies, and equipment compartments or modules should be restrained and the individual compartments must also contain the contents for the conditions noted in paragraph (b)(3). Durable placards, decals, or markings should be used where appropriate to limit the maximum weight of any compartment and the whole module. Compartment latches having sufficient strength and displacement/engagement should be used to contain the compartment contents for the conditions noted. If necessary, a static load test or analysis should be employed to ensure the container/compartment remains intact and the latch does not disengage for the most critical conditions. Unrestrained (loose) contents in an individual compartment, in combination with similar compartments, should require use of a magnification factor with the conditions noted. Prudent design and location of compartments having heavy, unrestrained (loose) equipment will mitigate the potential effects of minor crash impact loads.

(4) Flammability Standards for Materials. Interior materials shall meet the flammability standards appropriate for the rotorcraft type design; § 29.853.

(i) For rotorcraft certified prior to adoption of Amendment 29-17 (1978), the cabin materials shall be at least flash resistant and wall, ceiling linings, the covering of all upholstery, floors, and furnishings shall be at least flame resistant. Advisory Circular No. 23–2, Flammability Tests, dated August 20, 1984, contains test information about flash and flame-resistant material.

(A) Flash-resistant material may be characterized as that not exceeding a 20-inch-per-minute (horizontal) burn rate. See AC 23-2 for further information.

(B) Flame-resistant material may be characterized as that not exceeding a 4-inch-per-minute (horizontal) burn rate.

(C) For incubators, transparencies must be flash resistant and fabric (padding, covers) straps, etc., must be flame resistant according to the standard.

(ii) For rotorcraft certified to Amendment 29-17 adopted in 1978, the materials shall be self-extinguishing as specified in the standards. For example, transparencies shall be self-extinguishing as prescribed in § 29.853(a)(2).

(iii) Additionally, for rotorcraft certified to standards of Amendment 29-23 (1984), cushions of each passenger seat must have a “fire blocking layer” as prescribed in § 29.853(b).

(iv) The applicant is urged to use self-extinguishing materials regardless of the certification basis.

(v) For further information on materials, refer to paragraph AC 29.853. Advisory Circular 23-2, “Flammability Tests,” dated August 20, 1984, also contains information about flash-resistant and flame-resistant material tests.

(5) Exit Signs/Markings and External Markings. The approved exits require certain signs, instructions, and identification. The rotorcraft type design contains the required data. The maintenance manual and the RFM should also contain this information. See paragraph AC 29.811 for more information. Alternates may be approved which then become part of the applicant’s type design data. All U.S. transport rotorcraft presently in service should have an emergency interior lighting system to comply with § 29.811(f). (Refer to the certification basis of the rotorcraft.)

(6) Interior or “Medical” Lights. The view of the flightcrew must be free from glare and reflections that could cause interference. Curtains that meet flammability standards may be used. Complete partition or separation of the crew and passenger compartment is not prudent. Means for visual and oral communication are usually necessary. Paragraph AC 29.773 concerns pilot visibility.

(7) Patient Interference. When passengers or patients are located in close proximity to the pilot and the primary flight controls of the rotorcraft, a guard or shield should be installed or the patient restrained to prevent inadvertent or potential convulsive interference with safe operation of the rotorcraft. The guard may be a part of the rotorcraft interior features. In addition, rapid evacuation should be assured if a guard is used.

(8) External Devices.

(i) Search lights, loud speakers, baggage pods, etc., may be installed on the underside of or elsewhere on the rotorcraft. The strength of the attachments shall be substantiated for the flight and landing conditions, and for the minor crash conditions where applicable. Pilot visibility should not be affected adversely by lights or light reflection.

(ii) The device or pod located on the underside of the rotorcraft should not contact a level landing surface after “limit landing load” deflection of the landing gear. The gear should deflect without causing damage to the device. For example, if the limit landing load deflection is 8 inches, the device shall have at least 8-inch clearance to avoid contact with the landing surface or have an equivalent feature of design. The physical characteristics of the rotorcraft design dictate the necessary clearance for landing gear deflection. In addition, the device should be designed and located on the rotorcraft to preclude penetration of the device into a critical area of the fuselage. For example, the device should be located to minimize the potential of penetration into a fuel line, fuel cell, primary control tube, or occupant seat for any reason.

(iii) A flight evaluation is necessary to determine the effects of the device or devices on the rotorcraft flight characteristics and flightcrew night visibility.

(9) Miscellaneous. Various paragraphs in this AC contain guidance for the standards cited in the reference list (reference c(1)). These paragraphs should provide insight into designing an EMS configuration that would be acceptable under the standards.

(10) Oxygen. EMS oxygen installations are supplied by either liquid or gaseous oxygen. Both types of systems are discussed in this paragraph.

(i) Liquid Oxygen.

(A) System General Description. This section covers specific requirements for liquid oxygen systems. Most liquid oxygen systems in use are installed in military aircraft and, as a result, much of this material is based on experience with these systems. A rotorcraft liquid oxygen system should be comprised of a liquid oxygen converter, tubing, fittings, quantity gage, heat exchangers, and appropriate pressure and flow control components as shown in figures AC 29 MG 6-1 and AC 29 MG 6-2. The installation may provide for replenishing the liquid oxygen supply by use of a quick-removable converter or, in the case of a fixed installation converter, by providing external access for connection to a portable service trailer. More complicated systems such as those with multiple converter assemblies are not discussed here since installation of those systems are not envisioned in rotorcraft at this time.

(B) System Components. All components should be aircraft qualified and suitable for use in an EMS rotorcraft application.

(1) Liquid Oxygen Converter. A liquid oxygen converter assembly is a self-powered system for the storage of liquid oxygen and for its conversion to gaseous oxygen when required. A principal part of the converter assembly is a vacuum insulated container. Pressure relief valves should be provided to allow the escape of gas generated when oxygen is not being expended in the supply line. Oxygen losses from a converter assembly vary from 5 to 20 percent per 24 hours depending on the size of the container, its installation environment, and so forth. Aircraft qualified and approved converters suitable for EMS rotorcraft use are available in either 5- or 50-liter capacities. Size selection should be determined by flow rate and duration requirements. Performance characteristics of each converter size are available from the manufacturer.

(2) Shutoff Valve Assembly. This valve shall be accessible to a flightcrew member and be mounted in the supply line on or as close as possible to the outlet of the converter. This valve provides for the confinement of the remaining supply of liquid oxygen to the converter in the event of an emergency. Since the system pressure is low, the use of an electrically actuated shutoff valve is satisfactory to accomplish this function. In some installations, where the evaporating coil is immediately adjacent to the converter, a flow fuse has been used to accomplish this function. Use of a flow fuse must be supported by a system fault analysis and testing to show maximum normal flow will not result in nuisance trips, and reliable trips will be provided for malfunction conditions resulting in excess flow.

(3) Filler Valve. Some designs combine this function with the build-up and vent valve assembly as shown in figure AC 29 MG 6-2.

(4) Build-up and Vent Valve Assembly. This valve is positioned in the “vent” position when the system is being filled with oxygen and in the “build-up position at other times. Some designs combine this function with the filler valve as shown in figure AC 29 MG 6-2.

(5) Pressure Build-up Coil Assembly and Pressure Closing Valve. With the build-up and vent valve in the “build-up” position gas that is formed is allowed to apply pressure to the liquid to provide adequate flow through the check valve to the evaporating coil assembly. A connection to a pressure relief valve is also provided.

(6) Evaporating Coil Assembly. This is provided to convert the liquid oxygen into a gaseous form. The evaporating coil assembly should be of sufficient capacity to maintain the design flow quantity to the dispensing regulators at a temperature within +10 and -20° F of cabin ambient temperature. MIL-D-19326G contains a discussion of installation considerations for this unit.

(7) Vent Line. Gaseous oxygen escapes through this line. At the conclusion of the fill operation, liquid oxygen will flow overboard in a steady stream from this line to indicate the container is full of liquid oxygen. The vent line should be located to drain overboard at the bottom of the rotorcraft fuselage. Flow from the overboard

vent should be directed so as not to create a hazard for personnel and not allow liquid oxygen to impinge on the rotorcraft. The vent lines should be insulated to prevent frosting and sweating if they pass over equipment which will be harmed by water dripping from the lines, or drip pans should be installed under the lines. There should be no hydrocarbon fills or drains, forward or above, in proximity to the vent outlet.

(8) Regulator. A regulator should be installed in the supply line downstream from the heat exchanger. The regulator should reduce the liquid oxygen converter operating pressure to a supply pressure of 50 pounds per square inch gauge (PSIG) to be compatible with the normal operating pressure of medical oxygen equipment.

(9) Flow Control Valve. This valve provides a calibrated flow of gaseous oxygen from an operating supply of 50 ± 5 PSIG. A valve whose proof pressure is specified at 80 PSIG and has a burst pressure rating of 350 PSIG would be considered satisfactory.

(10) Check Valve. This valve prevents gaseous oxygen in the supply system from backing up into the liquid oxygen in the container and increasing the vaporization rate of the liquid oxygen by exposure to the gas. This valve is normally an integral part of the liquid oxygen converter assembly.

(11) Quantity Indicators. A quantity indicator should be installed at the appropriate rotorcraft crew station to permit monitoring of the liquid oxygen supply. The indicator when installed in the rotorcraft should indicate the amount of liquid oxygen in the converter. Adequate clearance should be provided for the indicator connectors so that they can be readily disconnected by servicing personnel. Provisions should be made for the storage of the rotorcraft connectors to the liquid oxygen converter when they are disconnected. Liquid oxygen quantity indicating equipment is available in three types: capacitance gauging, electro-mechanical transducer indication, and differential pressure type indication.

(12) Pressure Relief Valves. Pressure relief valves are provided to vent overboard through the overboard vent system any excess pressures developing within the system.

(13) Lines. Lines should be either solid tubing or flexible hoses. Examples of acceptable solid tubing are aluminum alloy conforming to AMS 4071 or corrosion resistant annealed steel (304) confirming to MIL-T-8506. Flexible hoses should be used for rotorcraft system connections to removable converters and to other applications where relative movement may occur. Flexible hoses should be wire-braid-covered bellows or wire-braid-covered tetrafluoroethylene. Flexible hose conforming to MS90457 or MS24548 would be considered satisfactory. MS90457 hose is flexible to -297° F (-183° C), and MS24548 hose is flexible to -65° F (-54° C). Synthetic lines such as plastic, nylon, or rubber should not be used for lines subjected

to continuous pressure, or for application where the line will not be visible. Lines that are not visible are those that are located behind liners or in the walls of the fuselage.

(14) Fittings. If in contact, dissimilar metals should be suitably protected against electrolytic corrosion. Line assemblies should be terminated with “B” nuts or a similar manufactured terminating connection. Universal adapters (AN 807) or friction nipples used in conjunction with hose clamps should be avoided for use in pressurized systems.

(15) Drain Valve. Systems that have permanently installed containers should include a drain valve located to allow for complete draining of the liquid oxygen container. An acceptable drain valve would be one in accordance with MK-V-25962 that is suitably capped. A cap in accordance with AN 929-5 with a permanently attached chain is a suitable cap.

(16) Low Pressure, Low Level Warning System. It is recommended that provisions be included in the system to alert the appropriate aircraft crew member that the level of the oxygen supply has reached some low level. It is recommended that low level be actuated when less than 10 percent of the full container capacity is available. If low system pressure is also monitored, the low pressure valve selected should be such that any drop in supply line pressure upon inhalation should not activate the low pressure warning function.

(C) Component Installation. The following are typical installation considerations that should be addressed when designing the oxygen system.

(1) Location. The oxygen equipment, lines, and fittings should be located as remotely as practicable from sources of flammable fluids, high heat and electrical items, fuel, oil, hydraulic fluid, batteries, exhaust stacks, manifolds, and so forth. Oxygen lines should not be grouped with lines carrying flammable fluids. If possible, converters should not be in line with the plane of rotation of a turbine. System components should not be installed in an environment that will exceed the temperature limit of the component, and no part of the system should be installed in an area that will exceed 350° F (176° C). To minimize loss due to heat, the liquid oxygen converter should not be located near equipment that dissipates a high quantity of heat.

(2) Converter Mounting. The oxygen container should be readily accessible to servicing personnel. If the container is not removable for servicing, the filler should be external to the aircraft with adequate contamination protection. Mounting provisions for the converter and plumbing to the evaporating coil assembly should include a drain pan with an overboard drain.

(3) Flexible Hoses. Hoses should be of sufficient length to provide unstressed connections and be protected against chafing on surfaces or objects which may damage the wire covering. The bend radius imposed on the hoses by the

installation and during remove and replace actions should not be less than the minimum established by the hose specifications.

(4) Lubricants. No lubricants should be used on liquid oxygen pipe fittings. MIL-T-27730 Teflon tape may be used on male pipe fittings when required. Teflon tape should not be used on flared tube fittings, straight threads, coupling sleeves, or on the outer side of tube flares. None of the tape should be allowed to enter the inside of a fitting. Krytox fluorinated grease by E.I. Dupont De Nemours and Company, or an equivalent, may be used sparingly on seals.

(5) Tubing Routing and Mounting. There should be at least 2 inches of clearance between the oxygen system and flexible moving parts of the rotorcraft. There should be at least a ½-inch clearance between the oxygen system and rigid parts of the rotorcraft. The oxygen system tubing, fittings, and equipment should be separated at least 6 inches from all electrical wiring, heat conduits, and heat emitting equipment in the rotorcraft. Insulation should be provided on adjacent hot ducts, conduits, or equipment to prevent heating of the oxygen system. In routing the tubing, the general policy should be to keep total length to a minimum. Allow for expansion, contraction, vibration, and component replacement. All tubing should be mounted to prevent vibration and chafing. This should be accomplished by the proper use of rubberized or cushion clips installed at 24-inch intervals (copper) or 36-inch intervals (aluminum) and as close to the bends as possible. The tubing, where passing through or supported by the rotorcraft structure, should have adequate protection against chafing by the use of flexible grommets or clips. The tubing should not strike against the rotorcraft structure during vibration and shock encountered during normal use of the rotorcraft.

(6) System Marking. The rotorcraft should be permanently and legibly marked, as applicable, in the locations specified below (a minimum letter height of ¼ inch is recommended):

(i) Adjacent to the overboard vent opening:

CAUTION
LIQUID OXYGEN VENT

(ii) On outside surface of filler box cover plate:

LIQUID OXYGEN (BREATHING) FILL ACCESS

(iii) On underside surface of filler box cover plate:

CAUTION - KEEP CLEAN, DRY, AND FREE FROM OILS

(iv) In prominent place when filler box is open, preferably near liquid oxygen drain valve:

DO NOT OPEN DRAIN VALVE UNTIL DRAIN HOSE
AND DRAIN TANK ARE CONNECTED

(v) Other placards, such as one at the converter cautioning about the presence of liquid oxygen, may also be appropriate.

(7) Other installation criteria are given in Chapter 6, AC 43.13-2A, Acceptable Methods, Techniques, and Practices-Aircraft Alterations, dated June 9, 1977, and should be given full consideration.

(D) Precautions. The referenced SAE report contains precautions peculiar to a liquid oxygen installation, and this material should be reviewed. It should also be emphasized that liquid oxygen equipment and the aircraft being serviced must be electrically grounded during servicing to prevent an accumulation of static electricity and discharge. The following considerations are included for special emphasis:

(1) System Cleanliness. The completed installation should be free of oil, grease, fuels, water, dust, dirt, objectionable odors, or any other foreign matter, both internally and externally prior to introducing oxygen in the system.

(2) Closures. Lines which are required to be disconnected, due to the location of the converter within the rotorcraft during rotorcraft maintenance checks or overhaul, should be capped to prevent materials which are incompatible with oxygen from entering the system when the system integrity is broken. Caps which introduce moisture and tapes that leave adhesive deposits shall not be used for these purposes. All openings of lines and fittings shall be kept securely capped until closed within the installation.

(3) Degreasing. All components of the oxygen system should be procured for oxygen service use in an “oxygen clean” condition. Parts of the oxygen system, such as tubing, not specifically covered by cleaning procedures should be degreased using a vapor phase trichloroethane degreaser. Ultrasonics may be used in conjunction with vapor phase degreasing for the cleaning of components.

(4) Purging. The system should be purged with hot, dry 99.5 percent pure oxygen gas in accordance with the manufacturers recommendations after:

(i) Initial assembly of the oxygen system; and

(ii) After system closure whenever the oxygen system pressures have been depleted to zero, or the system has been left open to atmospheric conditions for a period of time or is opened for repairs.

(5) Maintenance and Replacement. All parts of the oxygen system should be installed to permit ready removal and replacement without the use of special tools. All tubing connections and fittings should be readily accessible for leak testing

with a leak test compound formulated for leak testing oxygen systems and for tightening of fittings without removal of surrounding parts.

(ii) Gaseous Oxygen.

(A) General. This guidance is intended to supplement the existing guidance in AC 43.13-2A, Chapter 6. If there are any differences within the two AC's, this guidance shall prevail since it pertains specifically to Part 29 requirements.

(B) System Components.

(1) High Pressure Cylinders. Many installations utilize hospital type cylinders rather than aviation type cylinders. A concern with the hospital type cylinders is the yoke and the hard plastic washer that is commonly used with these cylinders. It is very difficult to properly attach these yokes since the rotorcraft provides a high vibration environment and no positive lock is provided. Leaks are a continuous problem with this configuration. Yokes are available for these bottles that provide for a positive lock. Improved washers that provide for a good elastomeric seal and include a metal ring to limit crushing the washer are also available. If the hospital type bottles are to be used, only the modified yokes and improved seals should be considered for future installations. The preferred cylinder is the aviation type cylinder with the integral shut-off valve and regulator. All cylinders should be DOT approved.

(2) Lines.

(i) General. Any lines that pass through potential fire zones should be stainless steel.

(ii) High Pressure. Use of high pressure lines may be necessitated by the use of a pressure regulator that is remote from the cylinder. The intent is to locate the regulator as close as physically possible to the cylinder, and to minimize the use of fittings. Lines of 6-inch lengths are encouraged with 18-inch lengths being the maximum in unusual circumstances. Lines made of stainless steel are recommended.

(iii) Low Pressure. Although lines may only be subjected to low pressures, if they are located behind upholstery or for any reason are not 100 percent visible during normal operation, they should be solid metal lines or high pressure flexible lines such as Aeroquip 300 series hose, or Stratoflex 124, or 170 series hose assemblies. The so called "green lines" should only be used in locations that are 100 percent visible during normal operation. This would restrict their use to the run between the mask and the bulkhead disconnect in the aircraft cabin. Synthetic lines such as plastic, nylon, or rubber cannot be recommended for applications that will be exposed to continuous pressure (i.e., as opposed to pressurized when needed). These materials can cold flow.

(3) Fittings.

(i) High Pressure. Intercylinder connections are made with regular flared or flareless tube fittings with stainless steel. Usually fittings are of the same material as the lines. Mild steel or aluminum alloy fittings with stainless steel lines are discouraged. Titanium fittings should never be used because of a possible chemical reaction and resulting fire. An example of a series of fittings that has been accepted is the “SS” series Swagelok tube fittings (flareless).

(ii) Low Pressure. Fittings for metallic low pressure lines are flared or flareless, similar to high pressure lines. Line assemblies should be terminated with “B” nuts in a similar manner to a manufactured terminating connection. Universal adapters (AN 807) or friction nipples used in conjunction with hose clamps are not accepted for use in pressurized oxygen systems.

(4) Shut-off Valve. Each system should contain a shutoff valve that is located as close as practical to the high pressure cylinder(s), and it should be assessable to a flightcrew member. High pressure cylinders should use slow opening/closing system shut-off valves. Where the regulator is part of the cylinder, and low pressure oxygen is controlled, the emphasis in slow acting valves is not as significant, and use of a flow fuse may be possible. Use of a flow fuse must be supported by a system fault analysis and testing to show maximum normal flow will not result in nuisance trips, and reliable trips will be provided for malfunction conditions resulting in excess flow.

(5) Regulators. The regulator should be mounted as close as possible to the cylinders (reference b(9)(ii)(B)(2)(i)). If nonaviation qualified regulators are to be considered, their service history should be reviewed and careful consideration should be given to the manufacturer’s environmental qualification. Radio Technical Commission for Aeronautics Document D0-160 is a recognized and accepted standard for environmental considerations. As a minimum, consideration should be given to operation during altitude, temperature, and vibration extremes.

(6) Placards. Appropriate placards should be provided with the installed system. Emphasis should be placed on any precautions that are appropriate during filling of the system and so forth.

(7) Filler Connections. When a filler connection is provided, it is recommended it be located outside the fuselage skin or isolated in a manner that would prevent leaking oxygen from entering the rotorcraft. Careful evaluation should also be made of any nearby sources of fuel, oil, or hydraulic fluid under normal or malfunction conditions. Each filler connection should be placarded. In addition, any valves (on aircraft or ground servicing equipment) associated with high pressure should be slow acting.

(C) “Provisions Only” Considerations. In some instances systems are approved that only include provisions for a supply system consisting of the high

pressure cylinders, regulators, and their associated lines and fittings. In these instances, a placard should be provided that refers to a supply system that is considered satisfactory for the remainder of the installation. Other supply system configurations may very well be acceptable; however, they should be evaluated by the ACO that evaluated the original installation. An example of an acceptable placard for this situation is:

> Oxygen Supply System must be in accordance with the requirements given in STC SH _____. Deviations to the configuration specified must be evaluated and approved by the Manager (include reference to the appropriate FAA ACO).

(11) Medical Communication Equipment. This equipment is provided to allow for communication between the rotorcraft and ground medical personnel. It includes voice communication and may also include telemetry equipment for the transmission of graphic data. It should be demonstrated that this equipment functions, and the range at which this determination was made should be recorded in the project file. The functional demonstration should include a 360° turn (clockwise and counterclockwise) to assure no significant sections of signal blanking exists. The remainder of the emphasis on this equipment should be to assure that operation of this equipment does not interfere with normal operation of any avionic systems whose installation is required for safe operation of the rotorcraft.

(12) Cabin Lighting. EMS interiors normally include higher intensity cabin lighting than other interiors. This lighting capability should be carefully evaluated to ensure it does not interfere with operation of the rotorcraft. In some installations a special curtain is required to separate the cockpit from any interference by the lighting. The FAA/AUTHORITY project file should include a short discussion of how this evaluation was conducted. See paragraph b(6) for other curtain considerations.

(13) Other EMS Equipment. These items of equipment that are installed for the EMS mission are considered to be optional equipment and should be operated to assure they function properly. This evaluation would normally be done by someone that is knowledgeable about the particular type of equipment since correct operation of the equipment is essential to a valid determination that the required rotorcraft systems are not being interfered with. This includes all removable pieces of medical equipment that are used for patient care. The primary purpose of the evaluation of this equipment is to emphasize the possibility of any adverse interference between operation of the EMS equipment and the systems whose installation is required for safe operation of the aircraft, the adequacy of the installation provisions, and assurance that failure modes will not result in a hazardous condition for the rotorcraft.

(14) Miscellaneous. The following areas are not peculiar to EMS installations; however, their significance is enhanced by the complexity of an EMS installation.

(i) Compatibility. Many EMS installations are a collection of several STC's and may also include some "FAA/AUTHORITY field approvals." For this situation it should be shown that the overall installation provides for safe operation of the aircraft. Operation of a search light, if included, should be emphasized since this system can be difficult to keep out of the cockpit.

(ii) Electrical Load Analysis. An electrical load analysis should be conducted, and additional guidance is available in paragraph AC 29 MG 1. If the analysis indicates the generator(s) can be overloaded, appropriate measures should be taken to account for the problem. In some instances a placard that specifies certain operating limitations may be satisfactory while in other instances an electrical interlock may be in order. In general, if the amount of overload is relatively small, the placard solution will probably be satisfactory; whereas if the amount of possible overload is significant, it is more likely that an interlock scheme will be necessary.

(iii) Aircraft Grounding. It should be emphasized in an appropriate place in the STC data (RFM, maintenance information, etc.) that any time the EMS systems are being operated or serviced (oxygen for example) on the ground, the rotorcraft itself must be grounded.

(iv) Electrical Outlets. All electrical outlets provided in the cabin should be the three-prong grounded type. When not in use, these outlets should be suitably protected against the entry of fluids.

(v) Placards. All medical outlets should be placarded (air, oxygen, vacuum, etc.). Electrical power outlets should be placarded for type of voltage and amperage capacity. A placard stating no smoking when oxygen is in use should be included. Other placards would include information appropriate to the oxygen system, operation of special controls, etc.

(vi) Equipment in Cargo and Baggage Compartments. When components are added to the compartment, revisions should be made to protect the system components due to shifting cargo. In addition, when oxygen components are installed, the compartment should be placarded against the storage of oil or hydrocarbons. A smoke detector is recommended for a compartment if oxygen cylinders are installed in a closed, nonaccessible compartment. Also, the compartment weight limitations placard should be changed. Paragraph AC 29.787 pertains to cargo and baggage compartments.

(15) Equipment Substitution. The EMS modification that is presented for approval will contain specific items of equipment, and the approval will make reference to this equipment. If other equipment (new model, manufacturer, etc.) is to be substituted, then an evaluation should be made to assure the substitute equipment is also satisfactory. This evaluation would normally consist of comparing the attachment means, design features, failure modes, specifications, and operation of the two units. The purpose of the evaluation is to assure there are not differences that have an

adverse effect on the airworthiness of the installation. Other differences would not be considered significant. A specific seat and litter design is approved as a part of the EMS configuration. Substitutions may be approved in accordance with the standards.

c. Related FAR Sections and References.

(1) FAR Sections. §§ 29.337, 29.471, 29.561, 29.773, 29.783, 29.785, 29.803, 29.805, 29.809, 29.811, 29.813, 29.815, 29.831, 29.853, 29.1301, 29.1309, 29.1353, 29.1357, 29.1411, 29.1431, 29.1557(d), 29.1583(d), 29.1585, and 29.1589.

(2) Other References.

(i) Helicopter Association International, Emergency Medical Services Recommended Guidelines, 1987, First Revision, 2 pages.

(ii) National Highway Traffic Safety Administration, Air Ambulance Guidelines, dated 1981.

(iii) FAR Part 91, General Operating and Flight Rules.

(iv) FAR Part 135, Air Taxi Operators and Commercial Operators.

(v) AC 67-1, Medical Information for Air Ambulance Operators, dated March 4, 1974.

(vi) AC 23-2, Flammability Tests, dated August 20, 1984.

(vii) Oxygen Equipment for Aircraft, Society of Automotive Engineers Aerospace Information Report No. 825B, Rev. 9/86.

(viii) Acceptable Methods, Techniques, and Practices--Aircraft Alterations, AC 43.13-2A, dated June 9, 1977.

(ix) Design and Installation of Liquid Oxygen Systems in Aircraft, General Specification for Military Specification MIL-D-19326G, dated October 1, 1985.

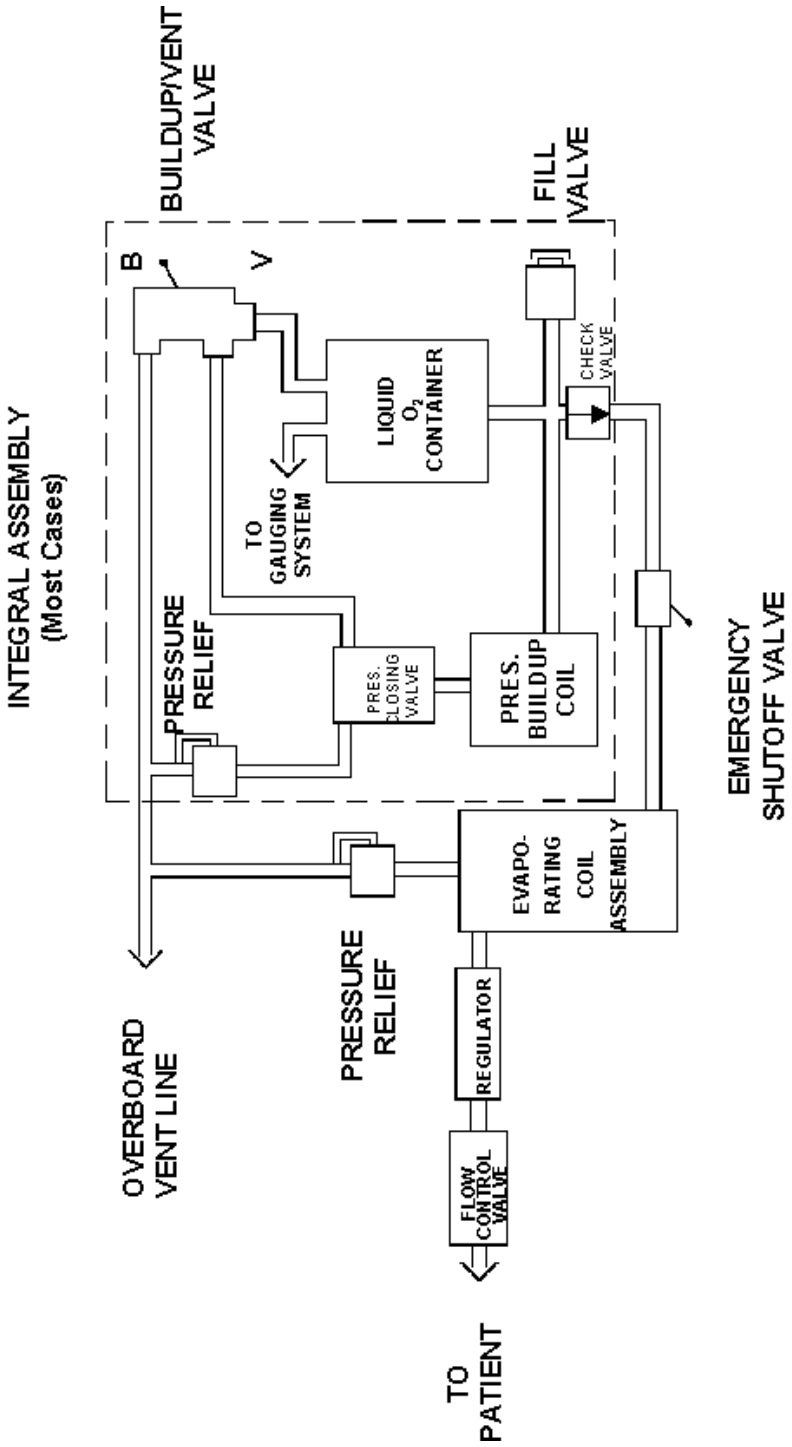

FIGURE AC 29.MG 6-1 TYPICAL LIQUID OXYGEN SYSTEM

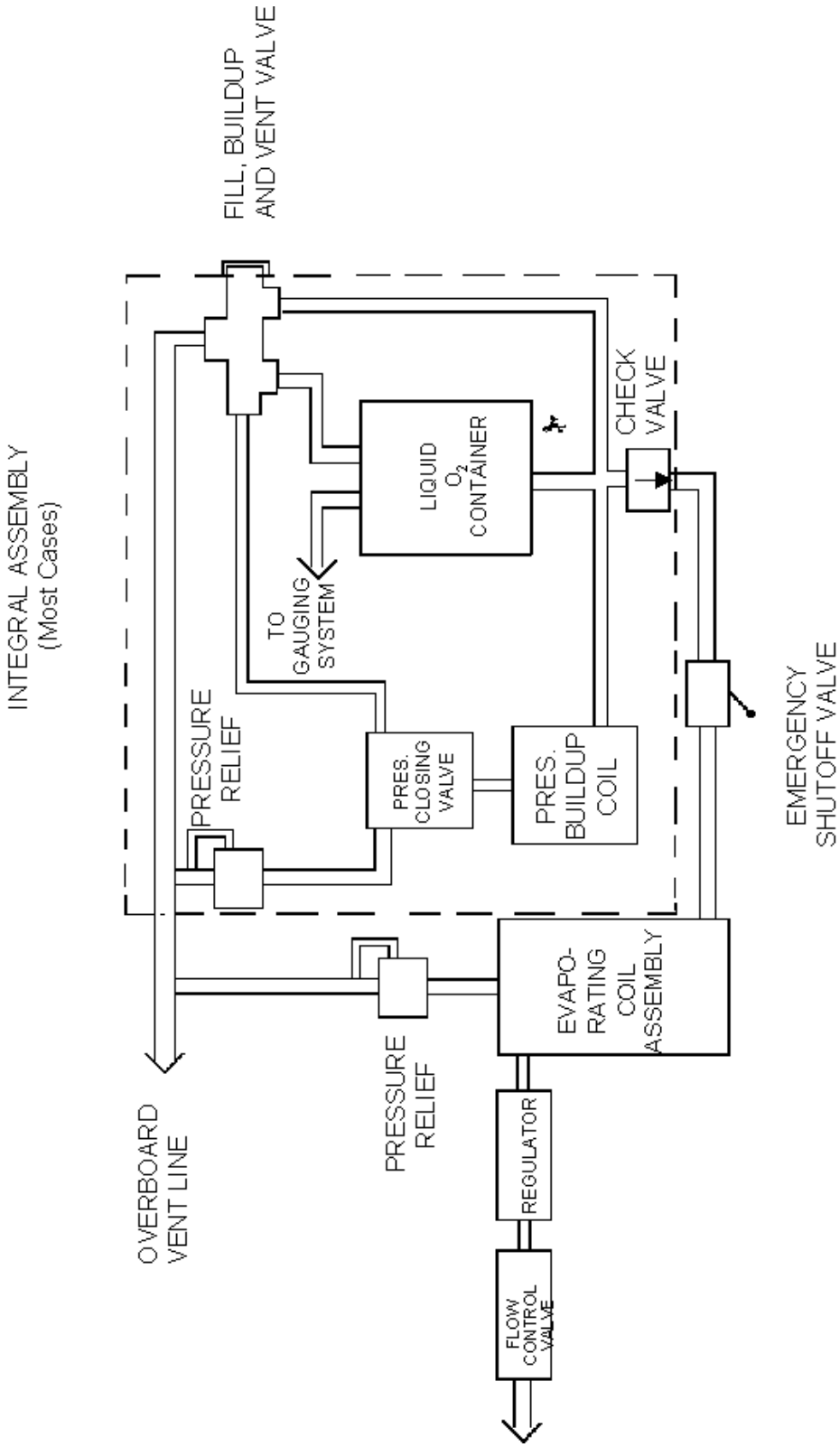

FIGURE AC 29.MG6-2 TYPICAL LIQUID OXYGEN SYSTEM - USING COMBINATION VALVE

CHAPTER 3
AIRWORTHINESS STANDARDS
TRANSPORT CATEGORY ROTORCRAFT

MISCELLANEOUS GUIDANCE (MG)

AC 29 MG 7. STRUCTURAL CONDITION INDICATORS.

a. Related Sections. § 29.301 - Loads; § 29.305 - Strength and Deformation; § 29.571 - Fatigue Evaluation of Flight Structure; § 29.1301 - Function and Installation; § 29.1309 - Equipment, Systems and Installations; § 29.1321 - Arrangement and Visibility; § 29.1322 - Warning, Caution, and Advisory Lights; § 29.1355 - Distribution System; § 29.1503 - Airspeed Limitations: General; and § 29.1529 - Instructions for Continued Airworthiness.

b. Background.

(1) Structural condition indicators have been used on rotorcraft for several years in two main programs: as part of the basic type design and as part of airworthiness directive (AD) action. When approved as part of the basic type design, only limited “credit” has been given for the installation of structural condition indicators; i.e., components provided with a structural condition indication system were required to be designed to § 29.571 “safe-life” criteria considering the structural condition indicator system inoperative. So-called “nonhazard” approvals were granted. When used as part of the mandatory actions of ADs, structural condition indicators have had a degree of “credit” recognized, primarily in the recognition of “fail-safety” provided by the indicator system.

(2) Since structural condition indicators have been used during both original type design and AD issuance, and since there is movement toward increased damage tolerance in rotorcraft design, policy concerning condition indicator use is considered appropriate.

c. At present, the use of structural condition indicators alone on new type designs is not considered an acceptable substitute for providing the necessary safe life for each component. However, areas which may be considered when approving these indicators for fail-safety credit are delineated in the following paragraphs.

d. What, how, when, where, and who of structural condition indicators.

(1) Indication of what?

(i) Previous structural condition indicators have primarily been used for crack detection. Several types of through-the-thickness crack detection systems are currently in use. Two types which detect changes in pressure in an instrumented chamber due to gas movement through a cracked wall are known as the blade

inspection method (BIM) system and the integral spar inspection system (ISIS). These systems can only detect full-depth cracks which are large enough to allow loss (of gain) of pressure from the instrumented chamber. This presents a limitation since full-depth cracks may be fast growing before detection. Another through-the-thickness crack method is a pressurized, dyed fluid or oil system to detect through cracks in specially designed bolts (NASA patent), spindles, pins, or other closed chamber mechanical equipment.

(ii) Surface cracks can be found by systems such as surface-mounted crack detection wires. These systems would allow a greater safe crack growth period for assuring safe landing after detection than the through-crack-detection systems, but they have been used little in operations because of significant limitations; e.g., complexity of installation, durability problems, limited areas of coverage, and strain level limitations.

(iii) Some aircraft have had mast moment indicators or other load indicators to help prevent the pilot from inadvertently applying a high load to the instrumented system or to help the pilot reduce the load by control movements. These load indicators only indirectly give indications of structural condition; therefore, only limited “credit” is allowed for this use. “Credit” is limited in that the fatigue life substantiations of § 29.571 should consider a reasonable number of excursions into the higher ranges established for the load indicator, and special inspections, rework, or replacement instructions should be provided for any strength degradation associated with high range excursions.

(2) <u>How indicated</u>?

(i) Current BIM systems use two types of indicators. The visual blade inspection method (VBIM) uses a gauge mounted on the blade which must be read visually by maintenance personnel while the aircraft is parked. The cockpit blade inspection method (CBIM) uses lights mounted in the cockpit which may be monitored by the crew. Other pressurized chambers have used dyes or oils to improve visual inspection effectiveness. Mast moment indicators and other load indicators use instruments with marked ranges and needles.

(ii) No specific types of load indicators are required by the FAA/AUTHORITY but the type used should be evaluated for accuracy, readability, and overall effectiveness. Paragraphs AC 29 MG 7(e) and (f) cover, in more detail, the use of structural condition indicators.

(3) <u>When indicated</u>? Structural condition indicators are used before flight, during flight, and for normal maintenance inspections. Paragraphs AC 29 MG 7 (e) and (f) contain guidance for cockpit-mounted instruments which are monitored during flight. Indicators used for normal maintenance inspections are the preferred type since they can be scheduled to allow the most effective use of available maintenance personnel of well-equipped maintenance facilities and of parts available.

(4) Where indicated? Indications on the component are provided by VBIM systems and by systems utilizing dye or colored oil leakage. Cockpit-mounted lights and gauges may be used for certain critical structures which require frequent, but simple, checks. Maintenance panel locations (cabin, equipment bay, etc.) are the preferred locations for use in routine maintenance.

(5) Who reads indicators? The flightcrew, of necessity, monitors indicators mounted in the cockpit for use during flight. Gauges with ranges of values representing mast bending moments or other structural loads are monitored by the flightcrew, as necessary, to reduce or to prevent control operations from imposing excessive loads or to prevent too many high load applications. Maintenance personnel are generally responsible for reading component-mounted indicators and for monitoring indicators which are mounted on maintenance panels. The before-flight checks may be conducted by maintenance personnel or by flightcrew in certain cases (i.e., cockpit-mounted gauges or “push-to-test” checks).

e. Actions required by indicators.

(1) On-ground indications. Indications noted on the ground should be followed by a functional check of the indication system as provided for by its design. If indications persist after the system has been checked and found to be functional, further inspection of the affected component(s) should be conducted for damage assessment. Any damage found as a result of the detailed inspections should be repaired or replaced as appropriate.

(2) In-flight indications.

(i) Indications used for in-flight monitoring have in the past been used for two main reasons: to provide a structural load display (such as mast bending moment) and to help resolve a service problem (CBIM systems have been used to supplement conventional inspection methods in blind areas).

(ii) Structural load display systems should not be used instead of correcting deficient designs. Structural load display systems are appropriate for use in locating control positions, such as the cyclic stick, under transient conditions such as slope landings and hover in sidewinds, but structural load display systems are not considered appropriate for routine operations such as climbout or cruise with constant attention required by the flightcrew. If the load indicator provides a needed tool to the pilot in limited types of operations and does not significantly add to pilot workload otherwise, its use can be considered.

(iii) In the past, certain service problems have been solved by adding in-flight indicators such as CBIM systems. When retrofit of the affected structure is impossible or impractical, and when conventional inspection techniques are shown to be inadequate by themselves, CBIM or similar systems may be the only practical

solution, despite the increase in pilot workload and the potential for problems caused by overreaction by the pilot to a structural fault indication. When used for correction of service difficulties, the structural condition indicator system should be accompanied by clear, concise crew directions to prevent possible catastrophic overreaction. Load reduction measures such as rotor speed changes, airspeed reductions, altitude changes, etc., should be clearly provided, if needed. Crack propagation time from indication should be sufficient to allow continued safe flight to a safe landing area. For new designs, CBIM or similar systems which add to the pilot's workload are considered inappropriate. Proper redesign to provide the needed safe life, fail-safety, and inspectability is considered the appropriate action.

f. Complementary considerations of structural condition indicator use.

(1) Two basic programs are commonly used for approval of structural condition indicators. Basic type certification procedures are used for mast moment indicators and similar systems, and AD's (with appropriate type design changes) are used for CBIM systems which require pilot attention and corrective action when an indication of a structural fault is detected.

(2) The fatigue substantiation required by §§ 27.571 and 29.571 should consider a conservative number of excursions into the high load range monitored by a structural condition indicator such as a mast moment indicator. Static strength should not be adversely affected by a single excursion into the high load range monitored by the indicator.

(3) Complementary design provisions should accompany the use of a structural condition indicator system. Redundancy of load paths and inspection systems and indicator system failure analyses should be provided, as necessary, to meet the requirements of § 29.1309. The life remaining after the indicator system detects a structural failure should be calculated (with test verification), and compatible inspection and/or overhaul programs should be provided.

(4) The FAA/AUTHORITY approval of a structural condition indicator system requires evaluation by the airframe, systems and equipment, and flight test specialists. The airframe specialist has the responsibility to review effects of structural condition indicator system use on aircraft loads, strength and deformation, and structural fatigue evaluation as well as the instructions for continued airworthiness. The systems and equipment specialist needs to evaluate the system for function and installation as well as the reliability requirements of § 29.1309. Flight test evaluation of the instruments' arrangement and visibility, effect on crew workload, and possible changes for RFM is also needed. Care should be exercised to assure that responsibilities are not given to the flightcrew which would be more appropriately handled by a redesign or by the maintenance personnel. Early coordination between all specialists is necessary to prevent delays from last minute design changes.

CHAPTER 3
AIRWORTHINESS STANDARDS
TRANSPORT CATEGORY ROTORCRAFT

MISCELLANEOUS GUIDANCE (MG)

AC 29 MG 8. (Amendment 29-35) SUBSTANTIATION OF COMPOSITE ROTORCRAFT STRUCTURE.

a. Reference FAR Sections. §§ 29.305, .307, .571, .603, .605, .609, .610, .611, .613, .629, .923, .927, .931, .1529 and Appendix A.

b. Purpose. These substantiation procedures provide a more specialized supplement to the general procedures outlined by AC 20-107A, “Composite Aircraft Structure.” These procedures address substantiation requirements for composite material system constituents, composite material systems, and composite structures common to rotorcraft. A uniform approach to composite structural substantiation is desirable, but it is recognized that in a continually developing technical area which has diverse industrial roots, both in aerospace and in other industries, some variations and deviations from the procedures described herein will be both necessary and acceptable. Significant deviations from this material should be coordinated in advance with the Rotorcraft Directorate.

c. Special Considerations. Since rotorcraft structure is configured uniquely and is inherently subjected to severe cyclic stresses, special consideration is required for the substantiation of all rotorcraft structure, including composites. This special consideration is necessary to ensure that the level of safety intended by the current regulations is attained during the type certification process for all structure with special emphasis on composite structure because of its unique structural characteristics, manufacturing quality and operational considerations, and failure mechanisms.

d. Background.

(1) Historically, rotorcraft have required unique, conservative structural substantiation because of unique configuration effects, unique loading considerations, severe fatigue spectrum effects, and the specialized comprehensive fatigue testing required by these effects. Rotorcraft structural static strength substantiation for both metal and composite structure is essentially identical to that for fixed wing structure once basic loads have been determined. However, rotorcraft structural fatigue substantiation for metals is significantly different from fixed wing fatigue substantiation. Since AC 20-107A, as developed, applies to both fixed wing aircraft and rotorcraft; it, of necessity, was finalized in a broad generic form. Accordingly, a need to supplement AC 20-107A for rotorcraft was recognized during type certification programs. One significant difference in traditional rotorcraft fatigue substantiation programs and fixed wing fatigue programs is the use of multiple full-scale specimen fatigue tests for rotorcraft programs rather than just one full-scale specimen test. Also, constant

amplitude, accelerated load tests are typically used rather than spectrum tests because of the high frequency loads common to rotorcraft operations. These rotorcraft fatigue tests have traditionally involved the generation of stress versus life or cycle (S-N) curves for each critical part (most of which are subjected to the cyclic loading of the main or tail rotor system) using a monotonic (sinusoidal) fatigue spectrum based on maximum and minimum service stress values. Unless configuration differences or flight usage data dictate otherwise, the monotonic fatigue spectrum's period is typically based on six ground-air-ground (GAG) cycles for each flight hour of operation. The S-N curves for the substantiation of each detailed part are typically generated by plotting a curved line through three data points (reference Appendix 1 of this AC, "Fatigue Evaluation of Transport Category Rotorcraft Structure (Including Flaw Tolerance)"). The three data points selected are a short specimen life (low cycle fatigue), an intermediate specimen life and a long specimen life (high cycle fatigue). Each raw data point is generated by monotonically fatigue testing at least two full-scale specimens (parts) to failure or run out for each data point on the S-N curve. The raw data point values are then reduced by an acceptable statistical method to a single value for plotting to ensure proper reliability of the associated S-N curve. Order 8110.9, "Handbook on Vibration Substantiation and Fatigue Evaluation of Helicopter and Other Power Transmission Systems" and Appendix 1 contain comprehensive discussions of the S-N curve generation process. The rotorcraft S-N curve process contrasts sharply with the fixed wing process of using a single full-scale fatigue article (usually an entire wing or airframe, which constitutes a single full-scale assembly data point), generic material or full-scale assembly S-N data (e.g., MIL-HDBK-5 for metals, MIL-HDBK-17B for composites, or AFS-120-73-2 for full-scale assemblies), a non-monotonic spectrum and relatively large scatter factors to verify or determine the design fatigue life of the full-scale airplane.

(2) Also, rotorcraft have employed and mass produced composite designs in primary structure (typically main and tail rotor blades) since the early 1950's. This was 10 or more years before composites were type certificated for primary fixed-wing structure in either military or civil aircraft applications (with some notable limited production exceptions, such as the Windecker fixed wing aircraft). In any case, the early 1950 period was well before a clear, detailed understanding of composite structural behavior (especially in the areas of macroscopic and microscopic failure mechanisms and modes) was relatively common and readily available in a usable format for the average engineer working in this field. It also predated the initial issuance of AC 20-107. Currently, much composite design information is proprietary, either to government, industry or both, and many data gathering methods have not been completely standardized. Consequently, a significant variation from laboratory to laboratory in material property value determination methods and results can exist. The early rotor blade designs (as well as current designs) are by nature relatively low strain, tension structure designs. Also, by nature, these designs are not damage or flaw critical. Thus by circumstance as much as design, early composite rotor blade and other composite rotorcraft designs incorporated an acceptable fatigue tolerance level of safety. In the 1980's, more test data, analytical knowledge, and analytical methodology became available to more completely substantiate a composite design. Current

FAR's 27 and 29 contain many sections (reference paragraph a.) to be considered in substantiating composite rotorcraft structure, but this advisory material is needed to supplement the general guidance of AC 20-107A by providing specific rotorcraft guidance for obtaining consistent compliance with FAR sections applicable to rotorcraft.

e. Definitions. The following basic definitions are provided as a convenient reading reference. MIL-HDBK-17, and other sources, contain more complete glossaries of definitions.

(1) AUTOCLAVE. A closed apparatus usually equipped with variable conditions of vacuum, pressure and temperature. Used for bonding, compressing or curing materials.

(2) ALLOWABLES. Both A- basis and B- basis values statistically derived and used for a particular composite design.

(3) BALANCED LAMINATE. A composite laminate in which all laminae at angles other than 0° occur only in ± pairs (not necessarily adjacent).

(4) A-BASIS ALLOWABLE. The "A" mechanical property value is the value above which at least 99 percent of the population of values is expected to fall, with a confidence of 95 percent.

(5) B-BASIS ALLOWABLE. The "B" mechanical property value is the value above which at least 90 percent of the population of values is expected to fall, with a confidence of 95 percent.

(6) BOND. The adhesion of one surface to another, with or without the use of an adhesive as a bonding agent.

(7) COCURE. The process of curing several different materials in a single step. Examples include the curing of various compatible resin system pre-pregs, using the same cure cycle, to produce hybrid composite structure or the curing of compatible composite materials and structural adhesives, using the same cure cycle, to produce sandwich structure or skins with integrally molded fittings.

(8) CURE. To change the properties of a thermosetting resin irreversibly by chemical reaction; i.e., condensation, ring closure, or addition. Cure may be accomplished by addition of curing (crosslinking) agents, with or without catalyst, and with or without heat.

(9) DELAMINATION. The separation of the layers of material in a laminate.

(10) DISBOND. A lack of proper adhesion in a bonded joint. This may be local or may cover a majority of the bond area. It may occur at any time in the cure or subsequent life of the bond area and may arise from a wide variety of causes.

(11) FIBER. A single homogeneous strand of material, essentially one--dimensional in the macro-behavior sense, used as a principal constituent in advanced composites because of its high axial strength and modulus.

(12) FIBER VOLUME. The volume of fiber present in the composite. This is usually expressed as a percentage volume fraction or weight fraction of the composite.

(13) FILL. The 90° yarns in a fabric, also called the woof or weft.

(14) GLASS TRANSITION. The reversible change in an amorphous polymer or in amorphous regions of a partially crystalline polymer from (or to) a viscous or rubbery condition to (or from) a hard and relatively brittle one.

(15) GLASS TRANSITION TEMPERATURE. The approximate midpoint of the temperature range over which the glass transition takes place.

(16) HYBRID. Any mixture of fiber types (i.e., graphite and glass).

(17) IMPREGNATE. An application of resin onto fibers or fabrics by several processes: hot melt, solution coat, or hand lay-up.

(18) LAMINA. A single ply or layer in a laminate in which all fibers have the same fiber orientation.

(19) LAMINATE. A product made by bonding together two or more layers or laminae of material or materials.

(20) LOW STRAIN LEVEL. As used herein, is defined as a principal, elastic axial gross strain level, that for a given composite structure provides for no flaw growth and thus provides damage tolerance of the maximum defects allowed during the certification process using the approved design fatigue spectrum.

(21) MATERIAL SYSTEM CONSTITUENT. A single constituent (ingredient) chosen for a material system (e.g., a fiber, a resin).

(22) MATERIAL SYSTEM. The combination of single constituents chosen (e.g., fiber and resin).

(23) MATRIX. The essentially homogeneous material in which the fibers or filaments of a composite are embedded. The resins used in most aircraft structure are thermoset polymers.

(24) MAXIMUM STRUCTURAL TEMPERATURE. The temperature of a part, panel or structural element due to service parameters such as incident heat fluxes, temperature, and air flow at the time of occurrence of any critical load case, (i.e., each

critical load case has an associated maximum structural temperature). This term is synonymous with the term “maximum panel temperature.”

(25) POROSITY. A condition of trapped pockets of air, gas, or void within a solid materials, usually expressed as a percentage of the total nonsolid volume to the total volume (solid + nonsolid) of a unit quantity of material.

(26) PRE-PREG, PREIMPREGNATED. A combination of mat, fabric, nonwoven material, tape, or roving already impregnated with resin, usually partially cured, and ready for manufacturing use in a final product which will involve complete curing. Prepreg is usually drapable, tacky and can be easily handled.

(27) RESIN. An organic material with indefinite and usually high molecular weight and no sharp melting point.

(28) RESIN CONTENT. The amount of matrix present in a composite either by percent weight or percent volume.

(29) SECONDARY BONDING. The joining together, by the process of adhesive bonding, of two or more already-cured composite parts, during which the only chemical or thermal reaction occurring is the curing of the adhesive itself. The joining together of one already-cured composite part to an uncured composite part, through the curing of the resin of the uncured part, is also considered for the purposes of this advisory circular to be a secondary bonding operation. (See COCURING).

(30) SHELF LIFE. The length of time a material, substance, product, or reagent can be stored under specified environmental conditions and continue to meet all applicable specification requirements and/or remain suitable for its intended function.

(31) STRAIN LEVEL. As used herein, is defined as the principal axial gross strain of a part or component due to the principal load or combinations of loads applied by a critical load case considered in the structural analysis (e.g., tension, bending, bending-tension, etc.). Strain level is generally measured in thousandths of an inch per unit inch of part or microinches/per inch (e.g., .003 in/in equals 3000 microinches/inch).

(32) SYMMETRICAL LAMINATE. A composite laminate in which the ply orientation is symmetrical about the laminate midplane.

(33) TAPE. Hot melt impregnated fibers forming unidirectional pre-preg.

(34) THERMOPLASTIC. A plastic that repeatedly can be softened by heating and hardened by cooling through a temperature range characteristic of the plastic, and when in the softened stage, can be shaped by flow into articles by molding or extrusion.

(35) THERMOSET (OR CHEMSET). A plastic that once set or molded cannot be re-set or remolded because it undergoes a chemical change; (i.e., it is substantially infusible and insoluble after having been cured by heat or other means).

(36) WARP. Yarns extended along the length of the fabric (in the 0° direction) and being crossed by the fill yarns (90° fibers).

(37) WORK LIFE. The period during which a compound, after mixing with a catalyst, solvent, or other compounding constituents, remains suitable for its intended use.

f. RELATED REGULATORY AND GUIDANCE MATERIAL.

Document	Title
(1) AC 20-95	"Fatigue Evaluation of Rotorcraft Structure"
(2) AC 20-107	"Composite Aircraft Structure"
(3) AC 21-26	"Quality Control for the Manufacture of Composite Materials"
(4) MIL-HDBK-17	"Polymer Matrix Composites Volume 1: Guidelines"

g. PROCEDURES FOR SUBSTANTIATION OF ROTORCRAFT COMPOSITE STRUCTURE. The composite structures evaluation has been divided into eight basic regulatory areas to provide focus on relevant regulatory requirements. These eight areas are: (1) fabrication requirements; (2) basic constituent, pre-preg and laminate material acceptance requirements and material property determination requirements; (3) protection of structure; (4) lightning protection; (5) static strength evaluation; (6) damage tolerance and fatigue evaluation; (7) dynamic loading and response evaluation; and (8) special repair and continued airworthiness requirements. Original as well as alternate or substitute material system constituents (e.g., fibers, resins, etc.), material systems (combinations of constituents and adhesives), and composite designs (laminates, cocured assemblies, bonded assemblies, etc.) should be qualified in accordance with the methodology presented in the following paragraphs. Each regulatory area will be addressed in turn. It is important to remember that proper certification of a composite structure is an incremental, building block process which involves phased FAA/AUTHORITY involvement and incremental approval in each of the various areas outlined herein. It is strongly recommended that a FAA/AUTHORITY certification team approach be used for composite structural substantiation. The team should consist of FAA/AUTHORITY engineering, the MIDO inspector(s), the associated Designated Engineering Representatives (DER's), the associated Designated Manufacturing Inspection Representatives (DMIR's), and cognizant members of the applicant's organization. Personnel who are composites specialists (or are otherwise

knowledgeable in the subject) should be primary team member candidates. Once selected, it is recommended that team meetings be held periodically (possibly in conjunction with type boards) during certification to ensure the building block certification process is accomplished as intended.

(1) The first area is the fabrication requirements of § 29.605:

(i) The quality control system should be developed considering the critical engineering, manufacturing, and quality requirements and a guidance standard such as AC 21-26, “Quality Control For the Manufacture of Composite Materials.” This ensures that all special engineering, or manufacturing quality instructions for composites are presented, evaluated, documented, and approved, using drawings, process and manufacturing specifications, standards, or other equivalent means. This should be one of the early phases of a composite structure certification program, since this represents a major building block for sequential substantiation work.

(ii) Specific allowable defect limits on, for example, fiber waviness, warp defects, fill defects, porosity, hole edge effects, edge defects, resin content, large area debonds, and delaminations, etc., for a particular material system component, laminate design, detailed part, or assembly should be jointly established by engineering, manufacturing, and quality and the associated inspection programs for defect detection created, validated, and approved. Each critical engineering design should consider the worse-case effects of the manufacturing process (maximum waviness, disbonds, delaminations, and other critical defects) allowed by the reliability limitations of the approved inspection program.

(iii) If bonds or bond lines such as those typical of rotorcraft rotor blade structure are used, special inspection methods, special fabrication methods or other approved verification methods (e.g., engineering proof tests, reference paragraph g(5)) should be provided to detect and limit disbonds or understrength bonds.

(iv) Structurally critical composite construction fabrication process and procurement specifications, for fabricating reproducible and reliable structure, must be provided and FAA/AUTHORITY approved early during the certification process and should, as a minimum, cover the following:

(A) Vendor and Qualified Parts List (QPL) Control. Applicants should be able to demonstrate to FAA/AUTHORITY certification team members (both the manufacturing and inspection district office (MIDO) and FAA/AUTHORITY engineering) at any time, that their quality control systems ensure on a continuous basis, that only qualified suppliers provide the basic material constituents or material systems (e.g., pre-pregs) that meet approved material specifications. Recommended guidelines for qualification of alternate material systems and suppliers are contained in MIL-HDBK-17B, Volume I, Section 2.3.2. These methods can also be used, periodically for qualification status renewals of existing material systems and suppliers.

(B) Receiving Inspection and In Process Inspection. Applicants should be able to demonstrate to FAA/AUTHORITY certification team members (both MIDO and engineering), at any time, that their receiving and in-process quality control systems provides products which continuously meet approved material and process specifications. Quality systems should be designed with appropriate checks and balances, such that the necessary statistical reliability and confidence levels for the items being inspected (that are specified by engineering) are continuously maintained. This will require periodic standard inspections and engineering characterization tests on basic constituent and material system samples which should be conducted, as a minimum, on a batch-to-batch basis. The periodic testing necessary to maintain the quality standard should be conducted by the applicants on conformed samples and should be FAA/AUTHORITY-witnessed.

(C) Material System Component Storage and Handling. Applicants should be able to demonstrate to FAA/AUTHORITY certification team members (both MIDO and engineering), at any time, that their composite material system (or constituent) storage and handling procedures and specifications provide products which continuously meet approved material and process specifications. Quality systems should be designed with appropriate checks and balances, such that the necessary statistical reliability and confidence levels for the items being inspected (which are specified by engineering) are continuously maintained. This should require, as a minimum, periodic inspections to ensure that proper records are kept on critical parameters (e.g., room temperature “bench” exposure, shelf life, etc.) and that periodic basic constituent and material system characterization tests are conducted, on a batch-to-batch basis. The periodic testing necessary to maintain the quality standard should be conducted by the applicants on conformed samples and should be FAA/AUTHORITY-witnessed.

(D) Statistical Validation Level. It is necessary to maintain the minimum required statistical validation level of the quality control system (which should be specified for each critical item or constituent by the approved quality and engineering specifications). The statistical validation level should be defined and approved early in certification. Also, approval and proper usage should be continuously maintained during the entire procurement and manufacturing cycles.

(v) Alternate fabrication and process techniques should be approved and should comply with § 29.605. Any alternate techniques should provide at least the same level of quality and safety as the original technique. Any changes should be presented and FAA/AUTHORITY-approved well in advance of the change’s production effectivity.

(2) The second area is the basic raw constituent, pre-preg, and laminate material acceptance requirements and material property determination requirements of §§ 29.603 and 29.613. These criteria require application of the critical environmental limits such as temperature, humidity, and exposure to aircraft fluids (such as fuel, oils, and hydraulic fluids), to determine their effect on the performance of each composite

material system. Temperature and humidity effects are commonly considered by coupon and component tests utilizing preconditioned test specimens for each material system selected. Material “A” & “B” basis allowable strength values and other basic material properties (based on MIL-HDBK-17, or equivalent) are typically determined by small scale tests, such as coupon tests, for use in certification work. In the case of composites, determination of these basic constituent and material system properties will almost invariably involve the submittal, acceptance and use of company standards. This is currently necessary because MIL-HDBK-17 has not completed development of “B” basis allowables for inclusion in the handbook. Also, test methods vary somewhat from manufacturer to manufacturer; therefore, individual company results will exhibit some scatter in final material property values. Any company standard which is approved and used should meet or exceed related MIL-HDBK-17 requirements. Material structural acceptance criteria and property determination should, as a minimum, include the following:

(i) Property characterization requirements of all material systems (e.g., pre-pregs, adhesives, etc.) and constituents (e.g., fibers, resins, etc.) should be identified, documented, and approved. These requirements, once approved, should be placed in all appropriate procedures and specifications (such as those in paragraph (g)(1) above).

(ii) Moisture conditioning of test coupons, parts, subassemblies, or assemblies should be accomplished in accordance with MIL-HDBK-17, other similar approved methods or per FAA/AUTHORITY approved programs.

(iii) The maximum and minimum temperatures expected in service (as derived from test measurements, thermal analyses on panels and other parts, experience, or a combination) should be determined and accounted for in static and fatigue strength (including damage tolerance) substantiation programs considering associated humidity induced effects.

(iv) The glass transition temperature, Tg, is an important characteristic parameter of amorphous polymers, such as epoxies. It is the temperature below which the polymer behaves like a “glassy” solid and above which it behaves like a “rubbery” solid, i.e., it is the temperature at which there is a very rapid change in physical properties. In actuality, the change from a hard polymeric material to a rubbery material takes place over a narrow temperature range. A composite material will experience a drastic reduction in matrix controlled mechanical material properties when loaded in this temperature range. Since the resin (matrix) is the critical structural constituent in a composite and since Tg exceedance is critical to structural integrity; Tg determination is necessary. The Tg margin methodology of MIL-HDBK-17, Section 2.2.2.1, should be implemented, i.e., the wet glass transition temperature (Tg) should be 50° F higher than the maximum structural temperature (see definition). For any type of resin or adhesive, an acceptable temperature margin using MIL-HDBK-17 techniques (e.g., consideration of limited high temperature excursions) or equivalent methodologies based on tests and/or experience should be established and approved early in the certification process.

In no case should structural strength be degraded below limit load capability on a maximum world wide high temperature day.

(v) Local design values should be established by analysis and characterization tests and approved for specific structural configurations (point designs) which include the effects of stress risers (e.g., holes, notches, etc.) and structural discontinuities (e.g., joints, splices, etc.). Proper determination of these values for full-scale design and test should be considered one of the most critical building blocks in substantiating and evaluating a composite structure. These transitional load transfer areas typically produce the highest stresses (and strains) and serve as the nucleation sites for many of the failures (including those due to the relatively low interlaminar strength of composites) that occur in service in a full-scale part or assembly. Small scales tests (such as coupon, element, and subcomponent tests), or equivalent approved testing programs, and analytical techniques should be carefully designed, prepared, and approved to evaluate potential “hot spots” and provide accurate simulations and representations of full-scale article stresses and strains in the critical transition areas. Proper certification work in this area will ensure initial safety and continued airworthiness in full-scale production articles.

(vi) The design strain level for each major component and material system should be established and approved such that specified impact damage considerations are defined and properly limited. The effects of the approved strain levels should be established for each composite material using small scale characterization tests and the results should be used to establish or verify the maximum allowable design strain level for each full-scale article. The maximum allowable design strain values selected should also take into account the reliability and confidence levels established for the relevant portions of the quality control system. This methodology is necessary because the amount and size of flaws in the production article may restrict the allowable level of design strain. In a no-flaw-growth design, the maximum specified impact damage and manufacturing flaw size at the most critical location on the part will be a major factor in determining the maximum allowable elastic strain. This design approach is currently selected for nearly all civil and most military applications; since, under normal conditions, only visual inspections are required in the field (unless unusual external damage circumstances such as a hail storm occur) to maintain the initial level of airworthiness (safety). However, many military applications because of their demanding missions, employ scheduled field non-destructive inspection (NDI) maintenance, (such as comparative ultrasonics) to ensure that flaw growth either does not occur, is controlled by approved structural repair, or by replacement of affected parts. To date, civil applications have not been presented that desire a flaw growth, phased NDI approach. Therefore, selection of the full-scale article’s design strain limit based on small scale tests for a no flaw growth design is seen to be extremely important.

(vii) Composite and adhesive properties should be determined such that detrimental structural creep does not occur under the sustained loads and environments expected in service. Small scale characterization tests (such as coupon, element, and subcomponent tests) and analysis, which verify and establish the full-scale design

criteria and parameters necessary to ensure that detrimental structural creep in full-scale structure does not occur in service, should be conducted early in certification and should be FAA/AUTHORITY-approved.

(viii) Material allowable strength values for full-scale design and testing should be developed using the coupon procedures presented in MIL-HDBK-17 or equivalent. At least three batches of material samples should be used in material allowable strength testing. Company standards should be prepared, evaluated and FAA/AUTHORITY approved early in certification (as part of the building block process), that reflect the material property determination considerations recommended in MIL-HDBK-17 on a equal to or better than basis.

(3) The third area is the protection of structure as required by § 29.609. Protection against thermal and humidity effects and other environmental effects (e.g., weathering, abrasion, fretting, hail, ultraviolet radiation, chemical effects, accidental damage, etc.) should be provided, or the structural substantiation should consider the results of those effects for which total protection is impractical. Determination and approval of worst-case or most conservative operating limits, and damage scenarios should be accomplished. Appropriate flammability and fire resistance requirements should also be considered in selecting and protecting composite structure. Usually a hazard analysis is conducted early in certification which identifies the various threats and threat levels for which protection must be provided. This data is then used to construct and submit for approval the methods-of-compliance necessary to provide proper structural protection.

(4) The fourth area is the lightning protection requirements of § 29.610. Protection should be provided and substantiated in accordance with analysis and with tests such as those of AC 20-53A and FAA Report DOT/FAA/CT-86/8. For composite structure projects involving rotorcraft certified to earlier certification bases (which do not automatically include the lightning protection requirements of § 29.610), these requirements should be imposed as special conditions. The design should be reviewed early in certification to ensure proper protection is present. The substantiation test program should also be established, reviewed and approved early to ensure proper substantiation.

(5) The fifth area is the static strength evaluation requirements of §§ 29.305 and 29.307 for composite structure. Only conservative proven methods of static analysis and failure criteria should be employed. The material stress-strain curve should be clearly established, at least through the ultimate design load, for each composite design. Composite structure should be statistically demonstrated, incrementally, through a program of analysis, coupon tests, minor component ultimate load tests and major component ultimate load tests. The static strength substantiation program should consider all critical loading conditions for all critical structure including residual strength and stiffness requirements after a predetermined length of service, e.g., end of life (EOL) (which takes into account damage and other degradation due to

the service period). Analytical reports and tests should consider all possible failure modes and should include the critical, allowable effects of:

(i) Environment (reference paragraphs AC 29 MG 8 g(2) and g(3)).

(ii) Service Life (residual limit strength and stiffness demonstration).

(iii) Load path loss (fail-safe analysis and limit strength demonstration).

(iv) The standard fabrication process and its variability.

(v) Impact damage expected during service up to the established threshold of detectability of the field inspection methods to be employed.

(vi) Point design and structural discontinuity considerations (e.g., stress risers, joints, etc.).

(vii) Unless the ultimate strength of each critical bonded joint can be reliably substantiated in production by NDI techniques (or other equivalent, approved techniques), then limit load capability must be guaranteed by either of the following or a combination thereof:

(A) The maximum disbond of each critical bonded joint which will carry limit load is established by test, analysis, or both. Disbonds greater than these values are typically prevented by design features.

(B) Each critical bonded joint on each production article should be proof tested to the critical limit load.

(viii) For static strength analysis laminae and laminate “A” and “B” basis allowables (determined in accordance with paragraph g(2)) should be used subject to the following conditions unless lower material properties are required by point design considerations (e.g., stress risers, joints, etc.) stiffness requirements (e.g., flutter or vibration margins), fatigue strength (including damage tolerance), or other overriding considerations.

(A) When applied loads are distributed through a single load path or single member within an assembly, the failure of which would result in the loss of the structural integrity of the component involved or inability of the rotorcraft structure to carry limit load, the part should be designed, analyzed, and tested using “A” basis allowables.

(B) Redundant (fail-safe) structures in which the failure of individual elements would result in applied loads being safely redistributed to other load carrying members without exceeding the limit load capability of the rotorcraft structure may be designed, analyzed, and tested using “B” basis allowables.

(6) The sixth area is the fatigue evaluation requirements of § 29.571. The fatigue evaluation method for the rotorcraft being certified should consider damage tolerance in accordance with AC 20-107A.

(i) The safe-life method for composite structure as defined in AC 20-107A is a flaw tolerant safe-life method (e.g., the test specimens consider inherent production flaws and impact damage (reference paragraph (7)(ii)).

(ii) Large area disbonds, weak bonds, delaminations, or other defects should be considered in tests or be prevented or be limited by appropriate flaw tolerant special design features and by special manufacturing, maintenance, and inspection procedures. Special attention should be assigned to all pure bond lines (reference paragraph (5)).

(iii) Non-fail-safe or partially fail-safe dynamic component structure, which may employ bond lines as the only load path, should be designed to relatively small previously approved values of elastic, ultimate strain for the material system utilized, and should be subjected to full-scale S-N curve testing. Six or more specimens are recommended, as part of the substantiation process. Where practical, flight-by-flight spectrum testing should be used.

(iv) All critical safety of flight composite structure must be designed to be flaw (damage) tolerant. Environment degradation and in-service damage critical values are typically included in the flaw tolerance evaluation. All other key factors, such as material selection, manufacturing, and quality assurance controls, and in-service inspection and maintenance, as noted previously, are also to be accounted for.

(v) The fail-safe design features of the rotor heads and blade retention systems, other critical primary composite structure, and point design features (e.g., bonded metal-to-composite joints) should be assessed and appropriate inspection programs provided to prevent catastrophic failure from flaw/damage propagation.

(vi) The method of generating S-N curves using approved raw data should be demonstrated, evaluated, and approved.

(vii) Any limited life items must be identified and placed in the Airworthiness Limitations section of the maintenance manual in accordance with § 29.571.

(viii) Load spectra, load truncation methods and all other major aspects of the fatigue evaluation are documented in test proposals and approved.

(ix) Flaw growth rates (from initial detectability to the established value for residual strength) must be previously established and closely monitored during

substantiation. This data should be used to establish special phased inspections and maintenance intervals for critical structure, as required.

(7) The seventh major area is the dynamic loading and response requirements of § 29.629 for vibration and resonance frequency determination and separation for aeroelastic stability and stability margin determination for flutter critical flight structure. Critical parts, locations, excitation modes, and separations are to be identified and substantiated. This substantiation should consist of analysis supported by tests and tests which account for repeated loading effects and environment exposure effects on critical properties, such as stiffness, mass, and damping. Initial stiffness, residual stiffness, proper critical frequency design, and structural damping are provided as necessary to prevent vibration, resonance, and flutter problems.

(i) All vibration and resonance critical composite structure are identified and properly substantiated.

(ii) All flutter-critical composite structure are identified and properly substantiated. This structure must be shown by analysis to be flutter free to 1.1 V_{NE} (or any other critical operating limit, such as V_D, for a VSTOL aircraft) with the extent of damage for which residual strength and stiffness are demonstrated.

(iii) Where appropriate, crash impact dynamics considerations should be taken into account to ensure proper crash resistance and a proper level of occupant safety for an otherwise survivable impact.

(8) The eighth area is the special repair and continued airworthiness requirements of §§ 29.611, 29.1529, and FAR Part 29 Appendix A for composite structures. When repair and continued airworthiness procedures are provided in service documents (including approved sections of the maintenance manual or instructions for continued airworthiness) the resulting repairs and maintenance provisions must be shown to provide structure which continually meets the guidance of paragraphs (1) through (7) of this AC paragraph. All certification based repair and continued airworthiness standards, limits, and inspections must be clearly stated and their provisions and limitations defined and documented to ensure continued airworthiness. In general, no composite repair should be attempted which is out of scope to repairs stated in an approved Structural Repair Manual (SRM) without an engineering design approval by a qualified FAA/AUTHORITY representative (DER or staff engineer). The following minimum criteria should be met in any acceptable composite repair:

(i) The repair should be permanent.

(ii) The repair should restore the structure to the required strength and stiffness.

(iii) The repair should restore all functional requirements.

(iv) The repair should have a negligible weight penalty.

(v) The repair should be aerodynamically compatible.

(vi) The repair materials should be compatible in all essential aspects with the parent materials.

In summary, primary composite structure is an especially critical structure that requires a clearly defined, phased approval (building block) certification process. This process should involve the entire project certification team from a project's start to its finish so that proper certification is continuously and ultimately achieved. Also, in some special cases, involving new advanced state-of-the-art composite technology, an issue paper may be necessary. However, in the majority of cases (using current composite materials and design philosophy) the applicant's acknowledged use of this advisory material (as recorded in the type board minutes) should eliminate the need for a separate issue paper.

CHAPTER 3
AIRWORTHINESS STANDARDS
TRANSPORT CATEGORY ROTORCRAFT

MISCELLANEOUS GUIDANCE (MG)

AC 29 MG 9 ROTORCRAFT ONE-ENGINE-INOPERATIVE POWER ASSURANCE

a. Purpose. The purpose of this document is to establish an approach for an engine power assurance procedure which will assure that the required OEI power level can be achieved.

b. General. The data and methods described herein are intended to be utilized as a guide and not necessarily the only means of achieving the desired result.

c. Applicability. The applicability of the document is intended to be primarily in support of the new 30-second and 2-minute OEI rotorcraft engine rating scheme.

d. Partial Power Assurance (Engine “Run-Line”).

(1) Fundamental to the concept of limited-use one-engine-inoperative (OEI) ratings is the requirement to be certain that the rated OEI power will indeed be available when needed. Conventional periodic power-assurance and topping checks are impractical with the limited-use rating concept because of the rapid expenditure of useful life during exposure at the engine speeds and temperatures consistent with limited-use ratings; therefore, we require a means of assuring the power available, other than by actual demonstration on each service engine. The advent of more sophisticated controls and engine developments catering to the 30-second/2-minute OEI rating concepts can provide the means to determine: (1) that the thermodynamic/mechanical capability of the engine as tested at the prevailing ambient conditions, will permit reaching a specified power level at any other ambient condition and (2) the fuel system and the various limiters will not prevent the engine achieving OEI power on demand. Pending availability of these new methods, the “parallel run line check” approach is recommended.

(2) The method commonly called the “parallel run-line check” that has been in use for two decades may require refinement for application to the new rating structure where the degree of extrapolation to the OEI power level is more extensive and the slope of the individual engine characteristic is important. As in any power assurance method, success is strongly dependent on the validity of the data base, the maintenance of the engines and sensor/indicating systems, and the care taken during the conduct of the power check. In addition, trending of individual engine performance by the operator and associated analyses can be used to avoid unnecessary flight delays and engine removals.

(3) Thermodynamic/mechanical capability can be addressed by test stand mapping of development engines over a range of ambient conditions to establish an adequate data base of engine characteristics. This will address characteristic slope variations between engines and establish correction factors necessary for extrapolation of data from a power assurance checkpoint to the 30-second OEI rating. Statistical verification and/or modification of the data base may be necessary during production by mapping of sample production engines. Performance data, at the 30-second OEI condition, taken during the supplementary block test and also during the “overhaul test” will demonstrate the capability of an engine and its control system near the end of an overhaul period to produce the required power. This will demonstrate capability with a deteriorated base-performance engine.

(4) The question of fuel system limitations and other various limiters, which could prevent the engine from achieving OEI power on demand, may be addressed by use of more sophisticated control systems, for example, electronic controls utilizing several engine parameter limiters each with automatic datum reset capability. Such control systems can sense an engine failure and automatically reset the operating limiters upward from “normal” to “OEI” limits. Conventional flow and electronic bench testing can be used to verify the function and limit setting of the units when new or after overhaul or repair. The reset features can be extended in function to include a fixed magnitude pulldown type reset for use in verifying new and field production engine/control combination function ability. Pulldown type resets are currently in use today for verification of limiter settings on some engines and can be utilized in this application to avoid unneeded exposure of the engine to the rapid life expenditure conditions.

(5) While the above is envisioned as the probable means in which assurance of capability will occur early in the application of such engines, there will be other means developed. One such means would be utilization of modern electronic engine condition or health monitors to display “go” or “no go” conditions relative to the ability of the engine and its control system to produce 30-second OEI power if required. In this application the device would be a “power assurance meter” and could be used with electronic, hydro-mechanical, and pneumo-mechanical control systems. It is entirely reasonable to expect that self-taught or self-programmed power assurance meters can be used that continually program the actual performance slope of the subject engine and extrapolate to the 30-second OEI with continuous engine monitoring. Self-programming occurs by sampling engine temperature, speed, torque, other characteristics (such as fuel pressure), and ambient conditions, resulting in the reflection of an actual characteristic for the installed engine. The availability of this information permits treating engines individually, whether it is a new or deteriorated engine or one with either minimum or maximum slope, without the necessary compromises to “best” engines that necessarily occurs using the earlier statistical approach. The question of instantaneous fuel system capacity could be addressed by fuel pump/control systems incorporating bypass systems equipped with flow meters. The health monitor or power assurance meter can continually integrate the fuel flow increment available in terms of power increment required in the event of OEI and would

include this intelligence in its pass-fail judgment criteria. Systems of this type would further be conducive to in-service ground checks by overt by-pass deactivation from low power settings to assure satisfactory mechanical function.

(6) Power assurance for the limited-use OEI ratings depends on a complete understanding of the engine model's operating characteristics. Two approaches have been discussed, one where, with the aid of a sophisticated fuel control system, the engine "learns" its own characteristics, and the other where the performance extrapolation is compared with a known minimum standard. The establishment of the standard is obviously a vital part of the procedure, which depends to a large extent on the existence of a reliable data base. In a mature program this is relatively easy to maintain, since it is possible to use the new production engine acceptance data to establish engine-to-engine variation and also to test engines prior to overhaul to determine the effects of deterioration. Thus, an up-to-date minimum or worst-engine characteristic can be maintained and service engines would be compared with this minimum engine.

(7) When the engine in question is a completely new design, or a remote derivative of an existing design, establishing the initial data base presents some problems which must be resolved. New production engines will eventually establish engine-to-engine variation, but initially an estimated worst variation must be assumed. The rate of deterioration and its impact on the base standard must be accounted for from the first engine delivered, yet it may be some time before an acceptable number of engines can be tested after service.

(8) A partial solution lies in the development and qualification cycle of the engine. A typical new-design program requires several development engines, of which more than half can be expected to be used for endurance or accelerated endurance testing. Furthermore, by the time certification is completed and production deliveries have commenced, these engines will normally have amassed several thousand hours of running usually to a schedule far more rigorous than normal service. The information gathered during these tests will provide the necessary data base for the assessment of in-service engines, and it can be progressively enlarged, and the derived data refined, as further production and service data are obtained.

e. Engine Considerations. This section describes the potential causes of an engine not delivering specification OEI power levels in spite of passing a parallel run-line power assurance check. Possible solutions are discussed in the context of one time use 30-second and 2-minute ratings.

(1) Fuel Flow.

(i) An engine may not achieve maximum power available or emergency rating because insufficient fuel is supplied. This condition has a number of possible causes:

(A) Low acceleration schedule

(B) Low maximum fuel stop

(C) Low fuel pump output

(D) Restrictions between the fuel control and the combustor

(ii) The proposed emergency ratings (OEI) may preclude the use of a topping check to uncover the above problems; therefore the following procedures are advanced which can be used either separately or in combination with other approved methods to assure that the required fuel flow is available.

(iii) During engine acceleration the fuel flow rate is considerably higher when compared with the normal steady state condition. This fact can be used to verify the availability of OEI fuel flow. The verification can be done by a direct measurement of fuel flow during an acceleration or derived indirectly from the engine acceleration rate. It is envisaged that the determination of fuel flow by these procedures should be done by some automatic means.

(iv) Figure AC 29 MG 9-1 is a bypass technique in which some of the fuel controls output is routed away from the engine and back to tank. This forces the fuel control onto the acceleration schedule in order to maintain gas generator speed. The design of the system should ensure that with the bypass flowing the fuel control outlet pressure and flow at the OEI ratings are simulated. The bypass system can be either permanently installed and operated in flight, (Failure Malfunction Effects Analysis must be provided), or as an item of ground test equipment. The quantity of fuel bypassed should be equivalent to the worst case difference between fuel flow at the 30-second rating and typical power assurance power levels. However, trend monitoring and service history may provide the basis of an alternative to periodic measurement.

(2) Limiters. A means must be provided to assure that a lower than required (for OEI power) limiter setting does not exist. Limiters that could prohibit reaching OEI power are as follows:

(i) Ng Limiter - (Maximum Compressor Speed Limiter or Governor)

(ii) Measured gas temperature limiter.

(iii) Output shaft torque limiter.

(iv) N_p limiter or power turbine governor - (Power turbine governors can be verified at lower than OEI power conditions.)

(v) Fuel flow limiter or maximum fuel flow stop - (Fuel flow limiting has been addressed in previous paragraphs.)

(3) Failure Modes and Effects Analysis. Failure modes and effects analysis, along with limited demonstration and suitable engine health monitoring procedures, may provide the basis of an acceptable solution to possible unexpected power limiting due to engine condition. It should be shown in the analysis that there is no probable event or combination of events which can cause a latent problem leading to inadequate fuel flow at high powers. The analysis should include all components of the fuel system such as: pump(s), control system (mechanical, hydromechanical, electronic, etc.) pipework, filters, fuel nozzle(s), and electrical interfaces. It should also address the probable effects of accumulated running time, dirty fuel, and hostile environment.

(4) High Corrected Gas Producer Speed.

(i) The proposed OEI ratings will cause the engine to run at high corrected gas producer speeds ($Ng/\sqrt{\theta}$). At high $Ng/\sqrt{\theta}$, performance characteristics of components, especially in the compressor, can change significantly and to an extent which would change the extrapolation of low speed run line data.

(ii) In operation, the effects of the accretion of dirt, FOD, component deterioration, and erosion of blading may also cause changes in the high-speed performance of an engine.

(iii) The above effects must be considered when developing power assurance procedures and data.

(5) Special Devices.

(i) The satisfactory operation of devices or systems whose functioning is required in order to achieve the OEI powers should be verified. Devices or systems, which in normal operations are not exercised through the range of travel needed to achieve the OEI powers, may require special checks to assure adequate capability.

(ii) Special devices that are required only in order to achieve the OEI powers (for example, solenoids to provide additional cooling flow to hot-section components or a water/anti-freeze mixture into the compressor), should be subjected to periodic checks and have a demonstrated high reliability.

f. Airframe Considerations.

(1) Instrumentation Accuracy.

(i) The accuracy of any power assurance check is strongly dependent on the air data and engine parameters. SAE ARP 1217 (May 1979) provides guidance on the desired measurement accuracy for parameters used for engine health and diagnostic monitoring. The parameters to be considered with their respective functions include:

Pressure Altitude Flight Speed Free Air Temperature (stagnation)	Air data basis for establishing power plant inlet pressure and temperature.
Torque Power Turbine Speed	Direct measurement of power output.
Gas Generator Speed(s) Measure Gas Temperature	Primary thermodynamic and limiting parameters
Fuel Flow	Secondary trend monitoring and potential limiting parameter

(ii) The overall power check accuracy can be assessed on a suitable statistical basis using equations that link the measured parameters and inserting system accuracy distributions for each value. This approach will provide an overall assessment of power check accuracy and will highlight major contributors to error. The accuracy assessment at each parameter should include the following elements:

Sensor error Indicator error Reading error	System error

(iii) This assessment might show that while conventional instrument displays of air data are acceptable, servo driven digital displays are desired for engine parameters. Further, displays that provide a “snapshot” of engine readings at a given moment may be useful in avoiding variation in power level during the finite period needed to manually read and log the set of parameters.

(2) Installation Loss Definition.

(i) Installation loss definition is an extremely important aspect of any form of rotorcraft engine performance. Engines are certificated and sold with uninstalled performance guarantees and estimates as to the power output capabilities. Installation of the engine in the rotorcraft imposes power output penalties that must be accounted for in any sort of power assurance check procedure. Normal practice dictates that the engine manufacturer provides a computer program that accurately predicts the engine power output capability throughout the approved flight envelope. This computer program has the capability to correct the power output for the losses incurred by the rotorcraft installation.

(ii) Losses that can reduce engine power available are as follows:

(A) Air intake total pressure loss

(B) Air intake total temperature rise

(C) Exhaust back pressure

(D) Accessory power extraction

(E) Compressor bleed air extraction

(F) Off-optimum power turbine output speed effects

(iii) The above items and methods of dealing with them are clearly defined in SAE Aerospace Recommended Practice (ARP) 1702. Typically, these losses will not be a fixed percentage but will vary with engine operating conditions and environment.

(iv) Any calculations involving power assurance data should use the approved engine performance program, and the rotorcraft losses should be input on a discrete basis so that the interaction between losses and their independent variability is properly considered. This approach is clearly defined in ARP 1702. Accurate consideration of the losses should produce a Power Assurance Check that will preclude premature removal of acceptable engines or continued operation of inadequate power plants.

g. Rotorcraft Flight Manual (RFM).

(1) The Power Assurance Check data for the installed engine (engine data adjusted for inlet losses, exhaust losses, bleed extraction, power extraction, and off-optimum output shaft speed operation) should be presented in the RFM in an easily useable format. The data format may consist of charts of engine torque (at constant power turbine shaft speed) versus allowable values of gas generator speed and gas path temperature covering the range of ambient conditions for takeoff operations. Associated limitations for the rotorcraft transmission and the engine should be noted.

(2) The RFM should also address the following:

(i) Include succinct statements of the reason for the Power Assurance Check and what must be done if the Power Assurance Check results are not acceptable.

(ii) Clearly state that Power Assurance Check either is a pre-takeoff or in-flight procedure, as required by operations, specifications and/or other approval authority documents.

(iii) Be kept simple, easy to use, and identify equipment operation limitations and requirements.

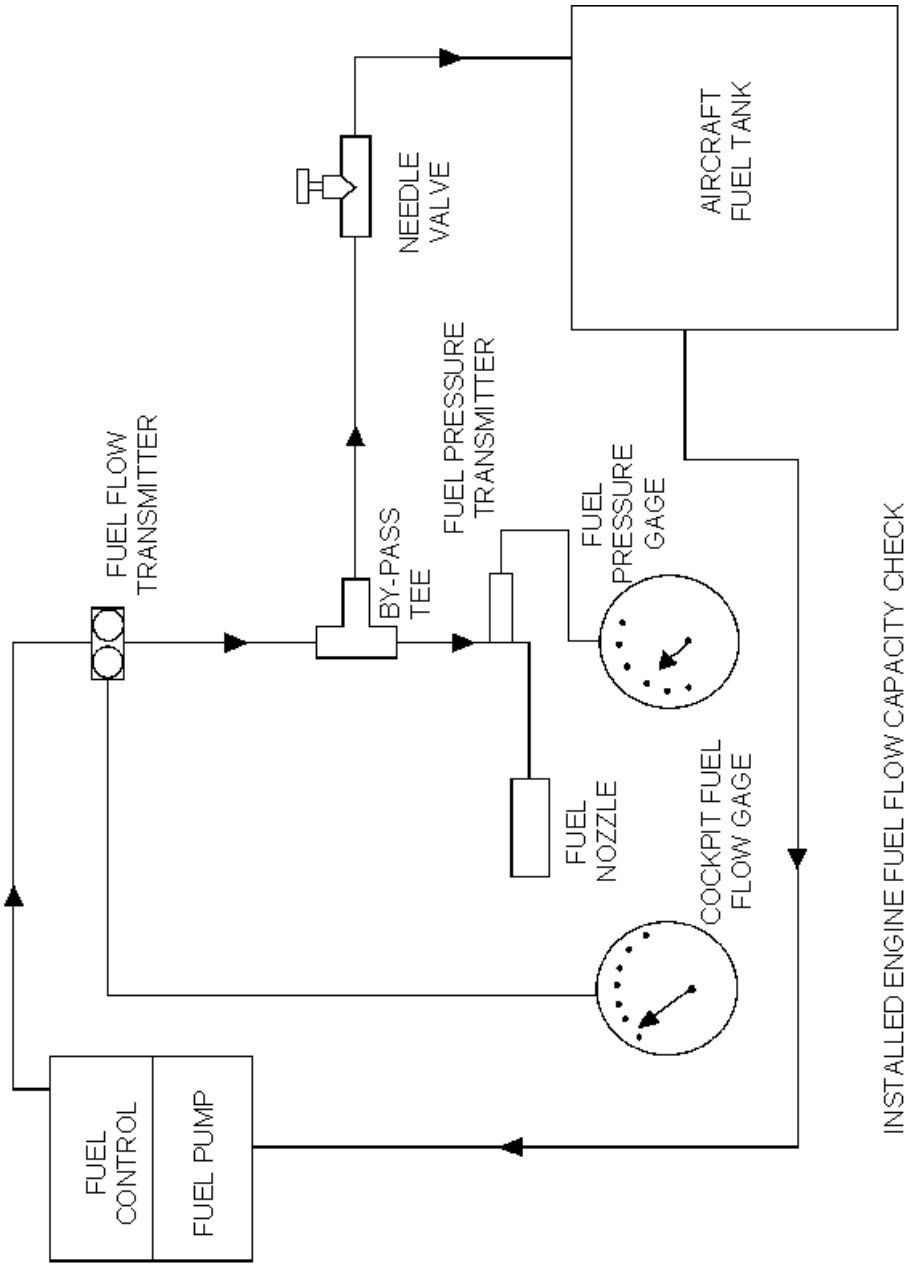

FIGURE AC 29.MG 9-1

CHAPTER 3
AIRWORTHINESS STANDARDS
TRANSPORT CATEGORY ROTORCRAFT

MISCELLANEOUS GUIDANCE (MG)

AC 29 MG 10 ADVISORY MATERIAL FOR SUBSTANTIATION OF EMERGENCY FLOTATION SYSTEM

a. Reference. FAR sections 29.521, .563(b), .751, .753(a)(1), (a)(2), .801(b), (d), .807(d).

b. Explanation.

(1) This section pertains to emergency flotation systems used to provide buoyancy for rotorcraft not specifically certificated for ditching but performing over-water operations. According to paragraph AC 29.801, ditching may be defined as an emergency landing on the water deliberately executed with the intent of abandoning the rotorcraft as soon as practical. Currently, ditching certification is not required by FAR 29; however, certification requirements are prescribed for applicants requesting ditching certification approval. If a rotorcraft operates over water during a Part 135 operation, the rotorcraft must comply with FAR 135.183, which may require floats.

(2) There are no airworthiness rules specifying the minimum standards for emergency flotation systems on rotorcraft not certificated for ditching. Equipment presented for evaluation must perform its intended function and not create a hazard for the rotorcraft or occupants. The objective in evaluating emergency flotation systems is safe flight and evacuation of the rotorcraft in emergency situations. Adequate emergency flotation systems would aid in keeping rotorcraft sufficiently upright and in adequate trim to permit safe and orderly evacuation in an emergency water landing.

c. Procedures. The following guidance criteria is based on past certification policy and experience for emergency flotation systems. Demonstration of compliance to other criteria may produce acceptable results if adequately justified by rational analysis. Model tests of the appropriate emergency water landing configuration may be conducted to demonstrate satisfactory flotation and trim characteristics where satisfactory correlation between model testing and flight testing has been established. Model tests and other data from rotorcraft of similar configurations may be used to satisfy the water requirements where appropriate.

(1) Flotation Systems.

(i) Normally inflated. The flotation systems which are normally inflated and intended for **emergency use only**, should be evaluated for:

(A) Structural integrity when subjected to:

(1) Air loads throughout the approved flight envelope with floats installed,

(2) Water loads during water entry, and

(3) Water loads after water entry at speeds likely to be experienced after water impact.

(B) Rotorcraft handling qualities throughout the approved flight envelope with floats installed.

(ii) Normally deflated. Emergency flotation systems which are normally stowed in a deflated condition and inflated either in flight or after water contact during an emergency water landing should be evaluated for:

(A) Inflation.

(1) Proper Inflation. The inflation system design should minimize the probability of the floats not inflating properly or inflating asymmetrically. This may be accomplished by use of a single inflation agent container or multiple container system interconnected together. Redundant inflation activation systems will also normally be required. If the primary actuation system is electrical, a mechanical backup actuation system will usually provide the necessary reliability. A secondary electrical actuation system may also be acceptable if adequate electrical system independence and reliability can be documented.

(2) Inadvertent actuation. The inflation system should be safeguarded against spontaneous or inadvertent actuation for all flight conditions. It should be demonstrated that float inflation at any flight condition within the approved operating envelope will not result in a hazardous condition unless the safeguarding system can be shown to be reliable. Limitations to the approved envelope can be established so inadvertent actuation does not impose a hazard at the new envelope.

(3) Float actuation. The float activation means may be fully automatic or manual with a means to verify primary actuation system prior to each flight. If manually inflated, the float activation switch should be located on one of the primary flight controls. These activation means should be safeguarded against spontaneous or inadvertent actuation for all flight conditions.

(4) Flight Limitations. Maximum airspeeds for intentional in-flight actuation of the float system and for flight with the floats inflated should be established as limitations in the Rotorcraft Flight Manual (RFM) unless in-flight actuation is prohibited by the RFM.

(5) Inflation time. For floats inflated automatically by water contact, inflation time from actuation to neutral buoyancy should be short enough to prevent the rotorcraft from becoming submerged to the point where egress is impeded.

(6) Pressure checking. A means should be provided for checking the pressure of the gas storage cylinders prior to each flight. A table or device showing acceptable gas cylinder pressure variation with ambient temperature and altitude (if applicable) should be provided.

(7) Over inflation. A means should be provided to minimize the possibility of over inflation of float bags under any reasonably probable actuation conditions.

(8) No puncture inflation. The ability of the floats to inflate without puncture when subjected to actual water pressure should be substantiated. A full scale rotorcraft immersion demonstration in a calm body of water is one acceptable method of substantiation. Other methods of substantiation may be acceptable depending upon the particular design of the flotation system.

(9) Flotation bag containment. Float installations should be evaluated to ascertain that emergency exits are not blocked by the inflated floats when the float bags are inflated to their maximum inflation pressure or their most adverse inflation pressure for emergency exits and the rotorcraft at its most critical weight and center of gravity configuration.

(B) Structural Integrity. The flotation bags should be evaluated for loads resulting from:

(1) Airloads during inflation and fully inflated during the most critical flight conditions and water loads with fully inflated floats during water impact for the rotorcraft desiring float deployment before water entry; or

(2) Water loads during inflation after water entry.

(C) Handling qualities. Rotorcraft handling qualities should be verified by test or analysis to comply with the applicable regulations throughout the approved operating envelopes for:

(1) Deflated and stowed condition,

(2) In-flight inflation condition,

(3) Fully inflated condition, and

(4) Partially inflated condition, assuming the most critical float compartment fails to inflate.

(2) The float system attachment hardware should be shown to be structurally adequate to withstand critical air loads and water loads during water entry when both deflated and stowed and fully inflated (unless in-flight inflation is prohibited). The appropriate vertical loads and drag loads determined from water entry conditions (or as limited by flight manual procedures) should be addressed. The effects of the vertical loads and the drag loads may be considered separately for the analysis.

(3) Flotation and Trim should be investigated for a range of sea states from zero to the maximum selected by the applicant and should be satisfactory in waves having height/length ratios of 1:12.5 Category A rotorcraft, 1:10 Category B rotorcraft with Category A engine isolation, and 1:8 for Category B rotorcraft.

(i) Demonstrated to be satisfactory to at least sea state 4 water conditions.

(ii) Flotation tests should be investigated at the most critical rotorcraft loading condition.

(iii) Flotation time and trim requirements should be evaluated with a simulated, ruptured deflation of the most critical float compartment. Flotation characteristics should be satisfactory in this degraded mode to at least sea state 2 water conditions.

(iv) Probable rotorcraft door/window open or closed configurations and probable damage to the airframe/hull (i.e., failure of doors, windows, skin, etc.) should be considered when demonstrating compliance with the flotation and trim requirements.

(4) Float System Reliability. Reliability should be considered in the basic design to ensure approximately equal inflation of the floats to preclude excessive yaw, roll, or pitch in flight or in the water.

(i) Maintenance procedures should not degrade the flotation system (such as introducing contaminants which could affect normal operation, etc.).

(ii) The flotation system design should preclude inadvertent damage due to normal personnel traffic flow and excessive wear and tear. Protection covers should be evaluated for function and reliability.

(5) Buoyancy requirements for emergency flotation systems should be a minimum of 25 percent excess buoyancy at maximum internal gross weight. The weight of fresh water (density 62.42 lb/ft^3) displaced by fully submerged float or floats should be a minimum of 25 percent greater than the maximum certificated internal gross weight of the rotorcraft. Analysis may be used for buoyancy verification.

(6) Sufficient watertight compartments should provide an acceptable margin of positive stability with any single main float compartment flooded or deflated. The location of the floats, the most critical compartment, the rotorcraft weight, mass moment of inertia, and center of gravity location are also important considerations for stability. Analyses, tests, or a combination thereof may be used to substantiate a positive margin of stability with the most critical compartment flooded or deflated.

(7) The inflatable bag type floats should be designed for the maximum pressure differential developed at the maximum design altitude. That is, the resulting pressure difference between an operational altitude and a take-off site elevation should be established and substantiated. This resulting pressure differential may become an operating limitation.

(8) The float landing loads may be determined from the drop test of the float landing gear or the loads may be derived from landing gear drop test or loads may be determined from model or full scale water entry tests. The vertical loads are distributed over three fourths of the bag's projected area. Bag floats are not subject to the side loads. Rigid floats are to be designed for vertical, horizontal, and side loads distributed along the length of the float.

(9) Design and/or support of the forward part of bag type floats should be evaluated for maximum design speeds to prevent collapse or significant distortion of the bag while in flight.

(10) Resistance to puncture and abrasion at attach/wear points is an important design consideration. Girt or attachment design loads should be sufficient to withstand the maximum imposed design loads.

(11) Occupant Egress and Survival. Each practicable design measure should be taken to minimize the probability that the behavior of the rotorcraft would cause immediate injury to the occupants or prevent evacuation of the rotorcraft after an emergency landing on water. Emergency exits should be located such that they are above the waterline and will not be blocked by the inflated floats or partially inflated floats, impeding evacuation of the rotorcraft. The flotation time and trim of the rotorcraft should allow the occupants to evacuate the rotorcraft. i.e., the rotorcraft should remain sufficiently upright and in adequate trim to permit safe and orderly evacuation of all personnel. For configurations which are considered to have critical occupant egress capabilities due to float proximity, an actual demonstration of egress may be required. When a demonstration is required, it may be conducted on a full-scale rotorcraft actually immersed in a calm body of water or using any other rig/ground test facility shown to be representative. The demonstration should show that floats do not impede a satisfactory evacuation.

(12) Rotorcraft Flight Manual. The Rotorcraft Flight Manual should contain the information pertaining to the emergency flotation system. This material should include:

(i) The information pertinent to the limitations applicable to the emergency float system and operating limitations for the emergency float system,

(ii) Procedures and limitations for flotation device inflation,

(iii) Procedures for use of emergency flotation equipment, and

(iv) Procedures for emergency water landing occupant evacuation.

CHAPTER 3
AIRWORTHINESS STANDARDS
TRANSPORT CATEGORY ROTORCRAFT

MISCELLANEOUS GUIDANCE (MG)

AC 29 MG 11 FATIGUE EVALUATION OF TRANSPORT CATEGORY ROTORCRAFT STRUCTURE (INCLUDING FLAW TOLERANCE)

a. PURPOSE. This advisory material provides an acceptable means of compliance with the provisions of § 29.571 of the Federal Aviation Regulations (FAR) dealing with the fatigue evaluation of transport category rotorcraft structure (AC 20-95, Fatigue Evaluation of Rotorcraft Structure, May 18, 1976, applies to normal category rotorcraft structure and older transport category rotorcraft). The fatigue evaluation procedures outlined in paragraph AC 29 MG 11 are for guidance purposes only and are neither mandatory nor regulatory in nature. Although a uniform approach to fatigue evaluation is desirable, it is recognized that in such a complex problem, new design features and methods of fabrication, new approaches to fatigue evaluation, and new configurations may require variations and deviations from the procedures described herein. It is recommended that major deviations from the procedures be coordinated with the Rotorcraft Standards Staff, ASW-110, to assure national standardization.

b. SPECIAL CONSIDERATIONS. The structure of rotorcraft is subject to cyclic stresses in practically every regime of flight. In addition, since rotorcraft are highly maneuverable and capable of forward, rearward, sideward, vertical, and rotational flight, operating limitations due to fatigue are possible in practically all flight situations. Corrosion and other environmental damage are also common in rotorcraft operations. For these reasons, special attention should be focused on the fatigue evaluation of rotorcraft structure.

c. BACKGROUND.

(1) During recent years there have been significant state-of-the-art and industry practice developments in the area of structural fatigue and fail-safe strength evaluations of transport category rotorcraft. The advance in the state-of-the-art has resulted from two primary programs: (1) the perfecting of production techniques for composite construction, and (2) the damage tolerant design features required to meet the battle damage requirements of military programs such as the Advanced Attack and Heavy Lift Helicopter (AAH and HLH) programs.

(2) Recognizing that advances in state-of-the-art and industry practice warranted changes to the existing fatigue requirements in Part 29, the regulatory requirements of § 29.571 were substantially revised. The revision to § 29.571 requires new guidance material containing compliance provisions related to the changes. Also, paragraph AC 29 MG 11 supplements AC 20-95 for new transport category rotorcraft and provides guidance material in the flaw tolerance area. General guidance material

for flaw/damage tolerance of composite structures is provided in AC 20-107A, Composite Aircraft Structure, April 25, 1984.

d. INTRODUCTION.

(1) Definitions.

(i) Fatigue Tolerance. The capability of structure to continue functioning without catastrophic failure after being subjected to fatigue (repeated) loads expected during operation of the rotorcraft. Fatigue tolerance may be achieved by safe-life design, flaw tolerant safe-life design (enhanced safe life), fail-safe design considering flaw growth, or a combination.

(A) Safe Life. The capability of pristine structure as shown by tests, or analysis based on tests, not to sustain measurable cracks during the service life of the rotorcraft or before an established replacement time. Special inspection intervals or other special procedures are not usually prescribed for safe-life substantiations. (Routine inspections for wear, fretting, corrosion, crack, and service damage as outlined in § 29.1529 are, of course, appropriate.)

(B) Flaw Tolerant (Enhanced) Safe Life. The capability of flawed structure as shown by tests or analysis based on tests to sustain, without measurable flaw growth, the spectrum of operating loads expected during the service life of the rotorcraft or during an established replacement time. Measurable flaw growth means flaw growth beyond an acceptable threshold of detectability. Enhanced safe life may be achieved by designing structure (single element or multiple element) that provides for resistance to crack initiation from manufacturing or service flaws, by material selection, by material processing, by limitation of stress levels, and by geometric design features. The protection of structure against environmental damage and accidental mechanical damage through the use of protective coatings may be used in determining initial flaw types and sizes to be considered."

(C) Fail-Safe Design Considering Flaw Growth. The capability of rotorcraft structure to continue functioning without catastrophic failure after being subjected to fatigue damage, corrosion, intrinsic flaws, or accidental damage expected during fabrication and operation of the rotorcraft. The concept of fail-safety now includes some discrete damage requirements and more explicitly requires consideration of "life-remaining" after flaws occur until the flaws are detected using a prescribed inspection plan or until the part is replaced. Fail-safe designs may include any of the following features:

(1) Multiple Load Path. Structure providing two or more separate and distinct paths of structure that will carry limit load after complete failure of one of the members.

(i) Active Multiple Load Path. Structure providing two or more load paths that are all loaded during operation to a similar load spectrum. The use of active multiple load paths requires special attention to fatigue damage in the remaining members after failure of a member.

(ii) Passive Multiple Load Path. Structure providing load paths with one or more of the members (or areas of a member) relatively unloaded until failure of the other member or members.

(2) Flaw Arrest (Flaw Stopper) Feature. Structure that does not provide completely separate and distinct load paths but does provide features of design such as bonded and/or riveted straps, changes in geometry, or special processing techniques such as rolling or coining to retard or arrest flaw growth.

(3) Slow Flaw Growth Feature. Structure (single element or multiple element) that provides for slow flaw growth by material selection, material processing, limitation of stress levels, geometrical design features, or by other methods.

NOTE: The detection of the crack or other flaw is an integral part of the flaw growth method. The need to use complicated inspection techniques may not be practical in some cases. See the discussion in paragraph AC 29 MG 11 g(1)(iii)(B).

(ii) Flaw. Structural imperfections in excess of type design allowances for “as manufactured” or “pristine” structure.

(A) In Metallics.

(1) For Fail-Safe Crack Growth. Corner cracks for holes, semicircular cracks for surfaces, realistic cracks for other locations.

(2) For Flaw Tolerance (Enhanced) Safe Life. Gouges, scratches, corrosion, fretting, or wearing likely to occur during fabrication and operation of the rotorcraft.

(B) In Nonmetallics. Flaws should be determined in accordance with AC 20-107A guidance.

(iii) Limit Design Load. “The maximum loads to be expected in service,” as defined by § 29.301(a), are considered as limit loads for new structure and as ultimate loads for flaw tolerance residual strength demonstration purposes. The residual strength after failure should equal or exceed these loads for flaw tolerance.

(iv) Damage Tolerance. No definition is provided in paragraph AC 29 MG 11 for this expression because many definitions have been applied by the civil and military communities. The expression has been used to describe design features, structural systems (including design, manufacturing, and operating

considerations), and substantiation techniques such as fracture mechanics analyses for metallics. Paragraph AC 29 MG 11 uses expressions for those features of the general damage tolerance concept used to provide and demonstrate fatigue tolerance of rotorcraft structure including consideration of flaws. Tolerance to flaws rather than tolerance to damage is specified in paragraph AC 29 MG 11 since flaws intrinsic to certain manufacturing and fabrication processes are covered in addition to damage from handling, corrosion, etc.

(2) Rotorcraft Flaw Tolerance. Flaw tolerant design as substantiated by fail-safe flaw growth or flaw tolerant (enhanced) safe-life means outlined in § 29.571 and paragraph AC 29 MG 11 g is required, unless it entails such complications that an effective flaw tolerant structure cannot be achieved within the limitations of geometry, inspectability, or good design practice. Good design practice includes consideration of component complexity, component weight, methods of production and component cost. Under these circumstances, a design that complies with safe-life criteria should be used. Typical examples of structure that might not be conducive to flaw tolerance design are swashplates, main rotor shafts, push rods, small rotor head components (i.e., devices, bolts, etc.), landing gear, and gearbox internal parts including bearings. In addition, the need for the use of inspection techniques and equipment or highly trained personnel--resources not available (for economic or other reasons) to the small operator or in remote areas of operation--should be carefully considered (reference paragraphs AC 29 MG 11 d(1)(i)(C)(3) and g(1)(iii)(B)).

(3) Test Background. Experience with the application of methods of fatigue evaluation indicates that a relevant test background should exist in order to achieve the design objective. Even under the flaw tolerance method discussed in paragraph AC 29 MG 11g, it is the general practice within industry to conduct flaw tolerance tests for design information and guidance purposes. Flaw location and flaw growth data based on test results and service history of similar parts, if available, should also be considered in establishing a recommended inspection program.

(4) Manufacturing Considerations. Assurance of structural adequacy also includes manufacturing and fabrication in accordance with design requirements and specifications, quality control to monitor compliance, and effective service inspection procedures.

(5) Fatigue Tolerance Considerations. In the fatigue tolerance evaluation, the following items should be considered:

(i) Identification of the structure to be considered in each evaluation (a failure mode and effects analysis or similar method should be used).

(ii) The stresses and strains (steady and oscillatory) associated with all representative steady and maneuvering operating conditions expected in service.

(iii) The frequency of occurrences of various flight conditions and the corresponding spectrum of loadings and stresses.

(iv) The fatigue strength, fatigue crack propagation characteristics of the materials used and of the structure, and the residual strength of the damaged structure.

(v) Inspectability, inspection methods, and detectable flaw sizes.

(vi) Variability of the measured stresses of paragraph AC 29 MG 11 d(5)(ii), the actual flight condition occurrences of paragraph AC 29 MG 11 d(5)(iii), and the fatigue strength material properties of paragraph AC 29 MG 11 d(5)(iv).

e. FLIGHT STRAIN MEASUREMENT PROGRAM.

(1) General. Subsequent to design analysis, in which aircraft loads and associated stresses are derived, the stress level and/or loads are to be verified by a carefully controlled flight strain measurement program. (This guidance is similar to that of AC 20-95.)

(2) Instrumentation.

(i) The instrumentation system used in the flight strain measurement program should accurately measure and record the critical strains under test conditions associated with normal operation and specific maneuvers. The location and distribution of the strain gages should be based on a rational evaluation of the critical stress areas. This may be accomplished by appropriate analytical means supplemented, when deemed necessary, by strain sensitive coatings or photoelastic methods. The distribution and number of strain gages should define the load spectrum adequately for each part essential to the safe operation of the rotorcraft as identified in § 29.571(a)(1)(i). Other devices such as accelerometers may be used as appropriate.

(ii) The corresponding flight parameters (airspeed, rotor RPM, center of gravity accelerations, etc.) should also be recorded simultaneously by appropriate methods. This is necessary to correlate the loads and stresses with the maneuver or operating conditions at which they occurred.

(iii) The instrumentation system should be adequately calibrated and checked periodically throughout the flight strain measurement program to ensure consistent and accurate results.

(3) Parts to be Strain-Gauged. Fatigue critical portions of the rotor systems, control systems, landing gear, fuselage, and supporting structure for rotors, transmissions, and engine are to be strain-gauged. For rotorcraft of unusual or unique design, special consideration might be necessary to ensure that all the essential parts are evaluated.

(4) Flight Regimes and Conditions to be Investigated.

(i) Typical flight and ground conditions to be investigated in the flight strain measurement program are given in Attachment 1 to paragraph AC 29 MG 11.

(ii) The determination of flight conditions to be investigated in the flight strain measurement program should be based on the anticipated use of the rotorcraft and, if available, on past service records for similar designs. In any event, the flight conditions considered appropriate for the design and application should be representative of the actual operation in accordance with the rotorcraft flight manual. In the case of multiengined rotorcraft, the flight conditions concerning partial engine-out operation should be considered in addition to complete power-off operation. The flight conditions to be investigated should be submitted in connection with the flight evaluation program.

(iii) The severity of the maneuvers investigated during the flight strain survey should be at least as severe as the maximum likely in service.

(iv) All flight conditions considered appropriate for the particular design are to be investigated over the complete rotor speed, airspeed, center of gravity, altitude, and weight ranges to determine the most critical stress levels associated with each flight condition. The temperature effects on loads as affected by elastomeric components are to be investigated. To account for data scatter and to determine the stress levels present, a sufficient amount of data points should be obtained at each flight condition. Consideration can be given to the use of scatter factors in determining the sufficiency of data points. In some instances, the critical weight, center of gravity, and altitude ranges for the various maneuvers can be based on past experience with similar design. This procedure is acceptable where adequate flight tests are performed to substantiate such selections. The combinations of flight parameters that produce the most critical stress levels should be used in the fatigue evaluation.

f. FREQUENCY OF LOADING.

(1) Types of Operation.

(i) The probable types of operation (transport, utility, etc.) for the rotorcraft should be established. The type of operation can have a major influence on the loading environment. In the past, rotorcraft have been substantiated for the most critical general types of operation with some consideration of special, occasional types of operation. To assure that the most critical types of operation are considered, each major rotorcraft structural component should be substantiated for the most critical types of operation as established by the manufacturer. The types of operation shown below should be considered and, if applicable, used in the substantiation:

(A) Long flights to remote sites (low ground-air-ground cycles but high cruise speeds).

(B) Typical, general types of operation.

(C) Short flights as used in logging operations.

(ii) One means is to substantiate for the most severe type of operation; however, this method is not always economically feasible.

(iii) A second means is to quantify the influence of mission type on fatigue damage by adding to or replacing hour limitations by flight cycle limitations (if properly defined and easily identifiable by the crew, for example: one landing, one load transportation). A special type of flight hour limitation replacement using factorization of flight hours for multiple types of operations may be feasible if continuing manufacturers' technical support is provided and documented; i.e., the manufacturer either provides the factorization analyses or checks them on a continuing basis for each rotorcraft.

(iv) Where one or more of the above operations are not among the general uses intended for the rotorcraft, the rotorcraft flight manual should state in the limitations section that the intended use of the rotorcraft does not include certain missions or repeated maneuvers (i.e., logging with its high number of takeoffs/landings per hour). A note to this effect should also appear in the rotorcraft airworthiness limitations section of the maintenance manual prepared in accordance with § 29.1529.

(v) Should subsequent usage of the rotorcraft encompass a mission for which the original structural substantiation did not account, the effects of this new mission environment on the frequency of loading and structural substantiation should be addressed and where practicable, in the interest of safety, a reassessment made. If this reassessment indicates the necessity for revised retirement times, those new times may be limited to aircraft involved in the added mission provided--

(A) Proper part reidentification is established;

(B) A Rotorcraft Flight Manual (RFM) supplement outlining limitations is approved;

(C) An airworthiness limitations section supplement is approved; or

(D) An appropriate combination of part reidentification, RFM supplement, or airworthiness limitation section supplement is approved.

(2) Loading Spectrum. The spectrum allocating percentage of time or frequencies of occurrence to flight conditions or maneuvers is to be based on the expected usage of the rotorcraft. This spectrum is to be such that it is unlikely that actual usage will subject the structure to damage beyond that associated with the

spectrum. Considerations to be included in developing this spectrum should include prior knowledge based on flight history recorder data, design limitations established in compliance with § 29.309, and recommended operating conditions and limitations specified in the rotorcraft flight manual. The distribution of times at various forward flight speeds should reflect not only the relation of these speeds to V_{NE} but also the recommended operating conditions in the rotorcraft flight manual that govern V_c or cruise speed. Where possible, it is desirable to conduct the flight strain-gage program by simulating the usage as determined above, with continuous recording of stresses and loads, thus obtaining directly the stress/load spectra for structural elements.

g. FATIGUE STRENGTH EVALUATION (INCLUDING ROTORCRAFT FLAW TOLERANCE).

(1) General. A means should be established using the conventional safe-life approach or another fatigue tolerant approach to control the airworthiness of principal structural elements identified under § 29.571(a)(1)(i). While the conventional safe-life approach is acceptable under certain circumstances as defined in § 29.571, the enhanced safe-life and fail-safe flaw growth approaches are to be used unless shown to be impractical as stated in § 29.571. A fatigue strength evaluation of structure considering tolerance to flaws is intended to ensure that even when flaws are present due to manufacturing of service operations, the structure will withstand service loads without failure until the flawed parts are replaced or until the flaws (including resulting fatigue cracks) are detected and appropriate action taken. Either of two types of fatigue strength evaluation may be used for flaw tolerance substantiation: flaw tolerant (enhanced) safe-life or fail-safe flaw growth methods. Flaw tolerant (enhanced) safe-life includes the testing and analyses currently associated with safe-life substantiation, plus consideration of flaws. Flaw growth methods include the testing and analyses currently associated with damage tolerance assessment (DTA). Tests are required to substantiate flaw propagation rates and residual strength. Either method or a combination can be used to meet the requirements of § 29.571 for tolerance to flaws. Flaw tolerance evaluation encompasses establishing the components to be designed as flaw tolerant, defining the loading conditions and extent of flaws for which the structure is to be designed, conducting structural tests and analyses to substantiate that the design objectives have been achieved, and establishing replacement times or establishing inspection programs as necessary to assure detection of fatigue damage. On components predominantly loaded by centrifugal force, care should be taken in selecting limit load to assure that it is the maximum expected in service. Design features that should be used in attaining a flaw tolerant structure are:

(i) Use of multi-path construction and the provision of crack stoppers to limit the growth of cracks and to provide adequate residual strength.

(ii) Selection of materials and stress levels that preclude crack growth from flaws or that provide a controlled slow rate of crack propagation combined with

high residual strength after initiation of cracks. Tests are required to substantiate crack propagation rates.

(iii) Design to permit detection of cracks and other flaws, including the use of crack detection systems, in all critical structural elements before cracks can propagate and become dangerous or result in appreciable strength loss and to permit replacement or repair. Inspection means appropriate for flaw tolerant design follow:

(A) Routine Inspections. To support routine inspection programs, blind areas should be avoided, where practical. Access panels and openings should be considered early in design.

(B) Special Inspections. These inspections will generally result from test results as well as the geometry of the design. Care should be given to special inspection techniques to be used in the field. Inspection techniques requiring facilities and resources beyond the capability of the small operator or not generally available in remote-area operations traditionally associated with rotorcraft operations should not be specified for field inspections. Conservative sizes for detectable cracks or other flaws should be used. Sufficient interval inspections should be provided to detect cracks before they grow from a detectable size to a size that reduces the remaining strength below design limit strength. If special inspection techniques not commonly available cannot be avoided, then use of enhanced safe-life substantiation techniques should be used.

(C) Pressurized Chambers. This design feature may be used to detect cracks that cause a chamber to lose its pressure (either positive or negative). The loss of pressure can be indicated by gages, or dye may be used if it is shown to be a dependable indicator. Care should be taken in the design of pressurized chambers and their indicating systems to assure dependability. Undependable systems can cause an inordinate number of false indications and maintenance problems.

(D) Vibration Generation. This characteristic should be considered both from the aspect of vibrations giving indications of a failure and from the aspect of the increased fatigue loading resulting from the vibrations.

(E) Noise Generation. If initial failure will result in a clear and unmistakable noise that is sufficiently continuous and loud, this characteristic can be used in achieving flaw tolerance without additional special inspections.

(F) Crack Detection Wire, Foil, etc. Detection wire may be used in areas that are sufficiently well defined so that the wire can be properly located. This technique is appropriate in areas otherwise difficult to inspect. The potential for false readings and possible maintenance problems should be considered.

(G) Health Monitoring. Techniques such as vibration sensing and analysis or real time oil analysis can be used to provide information on establishing inspection time.

(iv) Use of multiple element structures may be provided so that damage or failure occurring in one element of the member will be confined to that element and the remaining structure will still possess adequate load-carrying ability until the failed element is discovered by inspection.

(v) Provisions to limit the probability of concurrent multiple damage, particularly after long service, should be provided. These provisions should ensure adequate independence of each failure mode of multi-path constructions. The use of full-scale fatigue test articles are recommended in this evaluation. Examples of concurrent multiple damage to be avoided are:

(A) Simultaneous failure or partial failure of multiple path discrete elements working at similar stress levels.

(B) Failures or partial failures, in adjacent areas, due to redistribution of loading following a failure of a single element.

(2) Identification of Principal Structural Elements. Principal structural elements are those that contribute significantly to carrying flight and ground loads and whose failure could result in catastrophic failure of the rotorcraft. Typical examples of such elements are:

(i) Rotor blades and attachment fittings.

(ii) Rotor heads, including hubs, hinges, and some main rotor dampers.

(iii) Control system components subject to repeated loading, including control rods, servo structure, and swashplates.

(iv) Rotor supporting structure (lift path from airframe to rotor head).

(v) Fuselage, including stabilizers and auxiliary lifting surfaces.

(vi) Main fixed or retractable landing gear and fuselage attachment structure.

(3) Identification of Locations Within Principal Structural Elements to be Evaluated. The locations of damage to structure for damage tolerance evaluation can be determined by analysis or by fatigue test on complete structures or subcomponents. However, tests will be necessary when the basis for analytical prediction is not reliable, such as for complex components. If less than the complete structure is tested, care should be taken to ensure that the internal loads and boundary conditions are valid.

(i) The following should be considered:

(A) Strain gage data on undamaged structure to establish points of high stress concentration as well as the magnitude of the concentration;

(B) Locations where analysis shows high stress or low margins of safety;

(C) Locations where permanent deformation occurred in static tests;

(D) Locations of potential fatigue damage identified by fatigue analysis;

(E) Locations where the stresses in adjacent elements will be at a maximum with an element in the location failed;

(F) Partial fracture locations in an element where high stress concentrations are present in the residual structure;

(G) Locations where detection would be difficult;

(H) Design details that service experience of similarly designed components indicates are prone to fatigue or other damage; and

(I) Components fabricated from materials of potentially low fracture toughness or high flaw growth rate.

(ii) In addition, the areas of probable damage from sources such as a severe corrosive and/or fretting environment, a wear and/or galling environment, or a high maintenance environment should be determined from a review of the design and past service experience.

(4) Extent of Flaws. Each particular design should be assessed to establish appropriate damage criteria in relation to inspectability and flaw extension characteristics. In any flaw determination, it is possible to establish the extent of flaws in terms of detectability with the inspection techniques to be used, the associated single element failure or initially detectable flaw size, the residual strength capabilities of the structure, and the likely flaw extension rate (after either an element failure or a partial failure) considering the expected stress redistribution under the repeated loads expected in service and with the expected inspection frequency. Although multiple-element design should be used where practical, and obvious partial failure could be considered to be the extent of the flaw for residual strength assessment, provided a positive determination is made that manufacturing or service flaws will not initiate flaw growth within the life of the part or that the fatigue flaw growth will be detectable by the available inspection techniques at a sufficiently early stage of the flaw growth. In a swashplate or pin containing pressurized chamber, an obvious partial failure might be detectable through the inability of the chamber to maintain pressure after occurrence of the damage. Flaw tolerant (enhanced) safe-life evaluations from flaws should consider flaws to be expected during manufacturing (including handling) and during service. Special coatings against corrosion, flame plating or plasma plating

against fretting corrosion, and energy absorption coating or shielding against damage associated with maintenance may be used in determining the type and extent of flaws to be considered in flaw tolerant (enhanced) safe-life evaluations. The following are typical examples of the type of partial failures that may be considered in the flaw growth fail-safe and enhanced safe-life evaluation. These may or may not be appropriate to the design being considered. These examples have been sources of service difficulty on prior/existing designs:

(i) Detectable skin cracks in the trailing edge sections of rotor blades.

(ii) Detectable failures of individual straps in “strap packs.”

(iii) Detectable skin cracks emanating from the edge of structural openings or cutouts;

(iv) Detectable circumferential or longitudinal skin crack in the basic fuselage or tail boom structure;

(v) Complete severance of interior frame elements or stiffeners in addition to a detectable crack in the adjacent skin;

(vi) Presence of a detectable fatigue failure in at least the tension portion of the spar web or similar element;

(vii) Detectable failure of a primary attachment, including blade attachment fittings and control surface hinge and fittings; and

(viii) Fretting, corrosion, and galling conditions expected in service.

(5) Provisions for Inspection. The designer should strive to ensure adequate inspectability of all structural parts to qualify them under the fail-safe flaw growth provisions. In those cases where blind areas or surfaces exist, suitable design features should be provided to allow inspection techniques (either visual or nondestructive testing, as necessary) to assure adequate residual strength is achieved unless shown to be impractical due to limitations of geometry and good design practice. In addition, the alternate safe-life approach to fatigue tolerance should be implemented if the inspection techniques are shown to be too complicated and impractical.

(6) Testing of Principal Structural Elements. The nature and extent of tests on complete structures or on portions of the primary structure will depend upon applicable previous design, construction, tests, and service experience in connection with similar structures. For flaw tolerant safe-life testing, simulated flaws should be as representative as possible of actual gouges, scratches, pitting, or fretting to be expected in manufacture and service. For fail-safe testing considering crack propagation, simulated cracks should be as representative as possible of actual fatigue damage. Where it is not practical to produce actual fatigue cracks, flaws can be

simulated by cuts made with a fine saw, sharp blade, guillotine, or other suitable means. The validity of saw cuts, etc., should be verified by comparison to coupon tests of a cracked specimen of the same material. In those cases where bolt failure, or its equivalent, is to be simulated as part of a possible flaw configuration in joints or fittings, bolts can be removed to provide that part of the simulation.

(7) Flaw Tolerance Demonstration (Flaw Tolerant (Enhanced) Safe-Life or Fail-Safe Flaw Growth).

(i) It should be determined by analysis, supported by test evidence, that the structure with the extent of damage established for residual strength evaluation can withstand the specified design limit loads (considered as ultimate loads). Flaw tolerant safe-life substantiation provides a safe period of operation of structure with flaws with only routine inspections necessary. Safe crack growth (fracture mechanics) substantiation for fail-safe designs, on the other hand, provides for limited operation after crack initiation from flaws until the cracks can be safely detected. Since flaw tolerant safe life does not provide for detailed crack growth beyond the threshold of detectability, it will tend to apply to life-limited parts, particularly those hard to inspect. Safe crack growth substantiation of fail-safe designs is applicable to readily inspectable parts and may provide for replacement “on condition” rather than at a specified life.

(ii) The enhanced safe-life of metallic components will use analyses and testing similar to that of basic safe-life except that “flawed” specimens will be tested rather than “pristine” specimens.

(A) In order to determine the mean fatigue strength and the variability in fatigue strength considering flaws, it is necessary to test a number of specimens in establishing stress versus number of cycles (S-N) curves. Both full-scale and coupon specimens may be used to account for the variability in fatigue strength. A reduction factor should be applied to the mean curve in arriving at a working S-N curve. This factor should include consideration of the number of specimens tested, the variability of the fatigue results and, where available, previous test data on the same materials or similar components, as well as service experience.

(B) Where new materials or designs are being evaluated, it is recommended that a larger reduction factor be used until additional test data justifying a change are available. The mean and reduced S-N data acceptable to the Administrator on specimens with stress concentration factor, as applicable. A reduced S-N curve and the loading spectrum of paragraph AC 29 MG 11 f(2) should be used in determining replacement times.

(C) Figure AC 29 MG 11-1 represents the method of constructing a typical S-N curve from the fatigue test data. Four to six full-scale specimens have commonly been used in past safe-life programs to determine mean S-N curves. The applicant may propose a specific number of specimens that may be evaluated with

respect to the proposed methodology in determining the acceptability of the structural substantiation program.

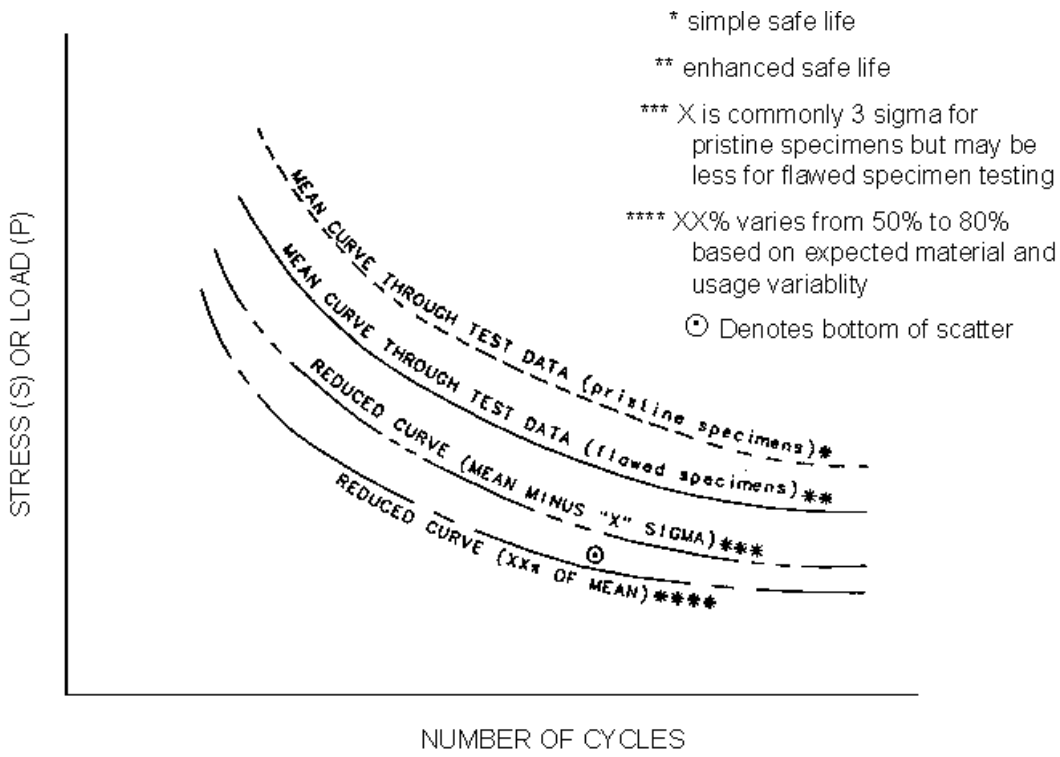

FIGURE AC 29.MG 11-1 S-N OR P-N CURVE USAGE

(D) Additional coupon tests have been used, when necessary, to identify more completely test scatter due to material properties variability. When the agreed-upon number of specimens is tested at various acceptable load levels, a reduction by three mean standard deviations, sigma (σ), necessary to account for material properties, should be made to establish a reduced S-N curve for determination of retirement times. This reduction may take into account the fact that flawed specimens were tested to preclude a dual penalty situation. Reduction by two mean standard deviations rather than three, may be used if justified by appropriate design features such as multiple elements or unmistakable flaw indications or by material properties that provide benign types of failure modes.

(E) "Run-outs" (specimens that do not fail) may be treated in one of three ways: deleted from data (conservative), considered as a failure at maximum test cycles (conservative), or considered in a rational manner to develop a more realistic "σ." To further account for variability in fatigue strength not totally accounted for by this reduction in S-N data, the lesser of this reduction, 80 percent of mean, or bottom of scatter, may be used as a limit, where justified, depending on material properties.

(iii) The procedures in Paragraph 7a of AC 20-107A provide criteria for substantiating safe flaw growth for composite structure.

(iv) Safe crack growth (fracture mechanics) substantiation should show that the damage growth rate under the repeated loads expected in service (between the time at which the damage becomes initially detectable and the time at which the extent of damage reaches the value for residual strength evaluation) provides a practical basis for development of the inspection programs and procedures described in paragraph AC 29 MG 11g(8). For multiengine load paths, a minimum of three inspection intervals is recommended between the initially detectable damage time and the time when residual strength is reduced to design limit load by crack growth. For single element structures, a minimum of four inspection intervals is recommended. The repeated loads should be defined in the loading, temperature, and humidity spectra. The loading conditions should take into account the effects of structural flexibility and rate of loading where it is significant.

(v) For flaw tolerance to achieve an improvement in safety over safe-life for composite structures, the procedures of Paragraph 7a of AC 20-107A are recommended. For flaw tolerance to achieve and improvement in safety over simple safe-life for metallic structures, the following testing criteria are recommended to supplement flaw tolerant safe-life analysis using flawed specimen S-N curves or crack growth analyses using appropriate stress intensity factors and da/dn data from coupon tests:

(A) <u>Flaw Tolerant (Enhanced) Safe-Life Testing Criteria</u>. Test full-scale specimens with flaws or a mix of full-scale and coupon specimens with flaws to obtain S-N data. Plot the data as shown in figure AC 29 MG 11-1. Utilize the S-N data and

loading spectrum of paragraph AC 29 MG 11 f(2) in substantiating a crack-free life or in arriving at a replacement time by cumulative damage analysis means. Where practical (as allowed by the number of damaging cycles in the loading spectrum), spectrum testing may be used for fatigue substantiation in lieu of S-N testing followed by analysis. The replacement time established should be included in the airworthiness limitations section of the document established under § 29.1529.

(B) Fail-Safe Crack Growth (Fracture Mechanics) Substantiation. Test two or more specimens to obtain crack propagation data using either a realistic load spectrum or an accelerated load (spectrum or single) associated with the use of propagation theory and data after cracks have been initiated. Unless a more rational method with an equivalent level-of-safety is applied for, the following methods of setting inspection intervals should be applied. In all cases, the inspection methods and intervals should adequately consider variables such as inspectability, type of inspection, crack growth behavior, and other scheduled maintenance considerations.

(1) For single element (load path) structure, plot the data and set the inspection as shown in figure AC 29 MG 11-2.

(i) Set the initial inspection at $L_1/3$.

(ii) Set the repetitive inspection intervals at $L_2/4$.

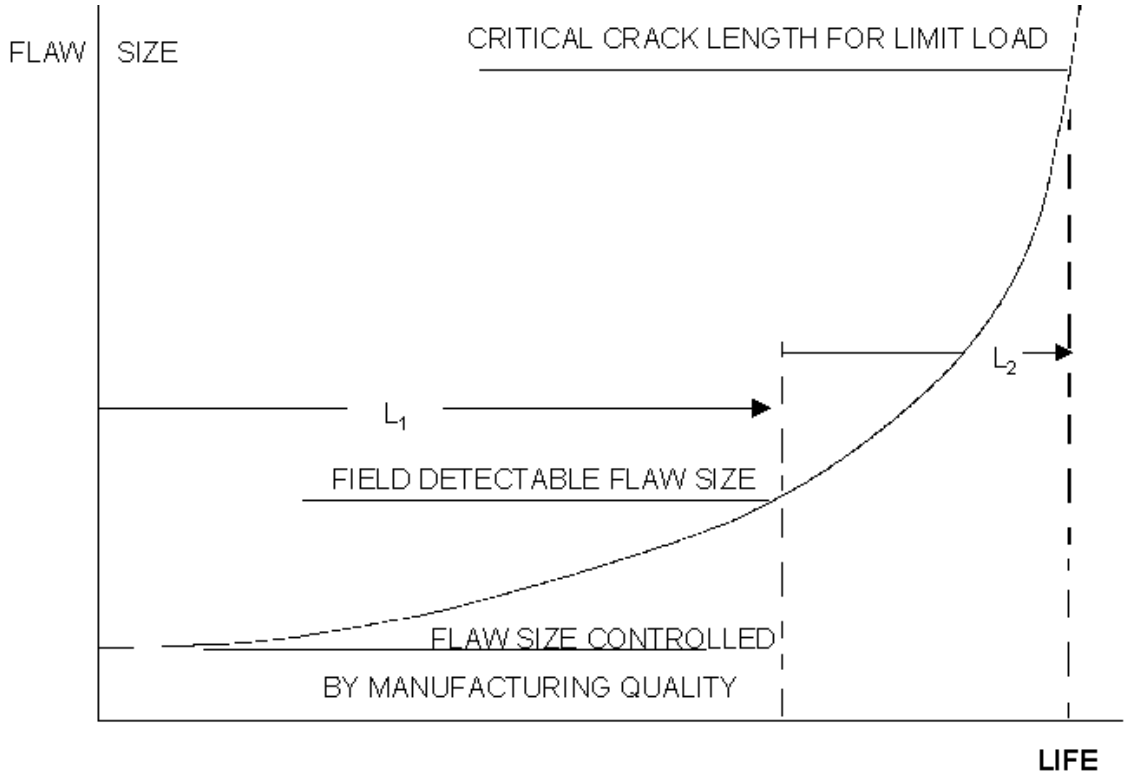

FIGURE AC 29.MG 11-2 CRACK GROWTH FOR SINGLE ELEMENT STRUCTURE

(2) For multi-element load path structure:

(i) Test all paths simultaneously with a 0.05-inch thick crack (or size detectable by manufacturing quality control procedures) in the critical element at the start of tests.

(ii) Note when field detectable cracking occurs.

(iii) Note when one element fails.

(iv) Note when the residual strength of the remaining elements decreases to limit load due to crack growth.

(v) From figure AC 29 MG 11-3, set initial inspection at $L_1/3$.

(vi) Set repetitive inspection intervals at $(L_2 + L_R)/3$.

NOTE: If partial failure of the critical element is not detectable, then L_2 becomes zero.

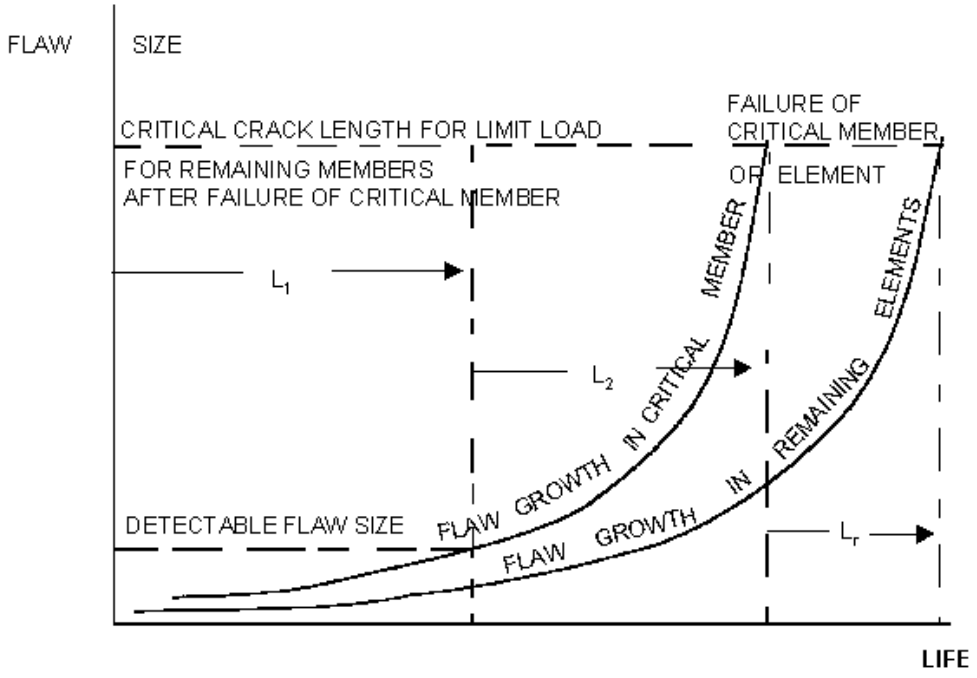

FIGURE AC 29MG 11-3 CRACK GROWTH FOR REMAINING ELEMENTS
OF MULTIPLE ELEMENT STRUCTURE

(C) Other test and inspection programs may be used rather than those of paragraph AC 29 MG 11 g(7)(v)(A) and paragraph AC 29 MG 11 g(7)(v)(B), if shown to have comparable or better probability of assuring that a catastrophic fatigue failure will not occur.

(vi) The flaw tolerance characteristics can also be shown analytically by reliable or conservative methods such as the following:

(A) By demonstrating quantitative relationships with structure already verified as damage tolerant;

(B) By demonstrating that the damage would be detected before it reaches the value for residual strength evaluation; or

(C) By demonstrating that the repeated loads and limit load stresses do not exceed those of previously verified designs of similar configuration, materials, and inspectability.

(8) Inspection. Detection of flaws before they become dangerous is the ultimate control in ensuring the flaw tolerance characteristics of the structure. Therefore, the applicant should provide sufficient guidance information to assist operators in establishing the frequency, extent, and methods of inspection of the critical structure, and this kind of information should, under § 29.571(a)(2), be included in the maintenance manual required by § 29.1529. Due to the inherent, complex interactions of the many parameters affecting flaw tolerance, such as operating practices, environmental effects, load sequence on flaw growth, and variations in inspection methods, related operational experience should be taken into account in establishing inspection procedures. Comparative analysis can be used to guide the changes from successful past practice, when necessary. Therefore, maintenance and inspection requirements should recognize the dependence on experience and should be specified in a document that provides for revision as a result of operational experience, such as the one containing the operator's FAA/AUTHORITY-approved structural inspection program developed through the Maintenance Review Board (MRB) procedures for FAR Part 121 operators.

h. COMBINATION OF REPLACEMENT TIME AND FLAW GROWTH EVALUATION. It may be possible to extend the replacement time of safe-life components that exhibit limited flaw tolerance capability by using a combination of the safe-life and flaw growth characteristics as described elsewhere in paragraph AC 29 MG 11 and by assigning both a replacement time and inspection period to these components. The replacement time may then be based on the combined probability of not initiating a fatigue crack at or before the replacement time and the probability that the crack, if initiated, will be detected prior to catastrophic failure or loss of limit load (or maximum attainable load, whichever is less) carrying capability. The probability of detection should be based on consideration of the inspection effectiveness, the inspection intervals, and the fatigue life remaining after an obvious

partial failure. A lower strength reduction factor commensurate with this probability of detection may then be used in the determination of the replacement time.

Attachment 1 to AC 29 MG 11
FLIGHT STRAIN PROGRAM CONDITIONS TO BE INVESTIGATED

1. GROUND CONDITIONS.
   a. Normal start.
   b. Rapid increases of RPM on ground to maximum power-on RPM of main rotor.
   c. Taxiing with full cyclic control.
   d. Landing run (if applicable).
   e. Braking (if applicable).
   f. Normal shutdown.
   g. Special ground checks (if applicable).

2. IN-GROUND-EFFECT (IGE) MANEUVERS.

   a. Hovering.

      (1) Steady with rotor at maximum side of RPM tolerance.
      (2) Steady with rotor at minimum side of RPM tolerance.
      (3) 90° right turn.
      (4) 90° left turn.
      (5) Control reversal.
         (i) Longitudinal.
         (ii) Lateral.
         (iii) Rudder.
      (6) Sideward flight.
         (i) Right.
         (ii) Left.
         (iii) Rearward flight.

   b. Maneuvering.

      (1) Jump takeoff.
      (2) Normal takeoff and accelerate to climb airspeed.
      (3) Normal approach and landing.
         (i) Multiengine.
         (ii) One-engine-inoperative.
      (4) Full autorotational landing.

Attachment 1 to AC 29 MG 11
FLIGHT STRAIN PROGRAM CONDITIONS TO BE INVESTIGATED
(continued)

3. FORWARD FLIGHT-POWER ON.

a. Level flight.
(1) 40 percent V_H.
(i) Minimum side of main rotor RPM tolerance (RPM +)
(ii) Maximum side of main rotor RPM tolerance (RPM -)
(2) 60 percent V_H.
(i) (RPM +)
(ii) (RPM -)
(3) 80 percent V_H.
(i) (RPM +)
(ii) (RPM -)
(4) V_H.
(i) (RPM +)
(ii) (RPM -)
(5) V_{NE}.
(i) (RPM +)
(ii) (RPM -)

b. Maneuvers.
(1) Full power climbs.
(i) All engines operative.
(ii) One-engine-inoperative.
(2) Cyclic pull-ups.
(i) 60 percent V_H.
(ii) 90 percent V_H.
(3) Normal acceleration from climb airspeed to 90 percent V_H.
(4) Turns.
(i) Right at 60 percent V_H and 90 percent V_H.
(ii) Left at 60 percent V_H and 90 percent V_H.
(5) Control reversals at 90 percent V_H.
(i) Longitudinal.
(ii) Lateral.
(iii) Rudder.
(6) Deceleration from 90 percent V_H to descent airspeed.
(7) Part power descent.
(i) All engines.
(ii) One engine out.

Attachment 1 to AC 29 MG 11
FLIGHT STRAIN PROGRAM CONDITIONS TO BE INVESTIGATED
(continued)

4. POWER TRANSITIONS.

a. All engines operating to one engine out.
(1) In full power climb.
(2) At 90 percent V_H.

b. One engine out to all engines operating in powered descent.

c. All engines operating to autorotation.
(1) At 60 percent V_H.
(2) At maximum forward transition speed.

d. Stabilized autorotation to all engines operating at normal autorotation airspeed.

5. AUTOROTATION.

a. Stabilized.
(1) At 70 percent V_{NE}.
(2) At $_{NE}$.

b. Turns at 70 percent and 100 percent V_{NE}.
(1) Right.
(2) Left.

c. Cyclic pull-up.

d. Control reversals.
(1) Longitudinal.
(2) Lateral.
(3) Rudder.

The flight and ground conditions of this table may be used as practical in developing operating load spectra for the range of projected aircraft usage such as:

(1) Short missions with high-power cycles and ground-air-ground (GAG) cycles (such as used in logging operations).

(2) Medium range missions of 1 to 2 hours that include three or more GAG or LO-HI power cycles per mission.

Attachment 1 to AC 29 MG 11
FLIGHT STRAIN PROGRAM CONDITIONS TO BE INVESTIGATED
(continued)

(3) Long range missions that consider the longest practical range of the aircraft and consider two or more GAG (or high power) cycles per mission (such as used for remote offshore drilling platforms).

If aircraft usages that produce a large number of high-power cycles (approximately 50 per hour) or high GAG cycles (approximately 25 per hour) such as logging operations are not included in the fatigue tolerance substantiation, this should be noted in the RFM and Maintenance Manual airworthiness limitations section (reference paragraph AC 29 MG 11 f(1)).

CHAPTER 3
AIRWORTHINESS STANDARDS
TRANSPORT CATEGORY ROTORCRAFT

MISCELLANEOUS GUIDANCE (MG)

AC 29 MG 12. § 29.865 (Amendment 29-43) EXTERNAL LOADS.

a. Background. In the United States (U.S.), the external load attaching means standards for transport and normal category rotorcraft were originally contained in Subpart D, "Airworthiness Requirements of FAR Part 133, Rotorcraft External-Load Operations." Amendment 29-12, issued in 1977, added a new § 29.865, which moved these standards from Part 133 to Part 29. An identical transfer occurred in 1977 for Part 27. Amendment 29-26, issued in 1990, clarified the intent of Amendment 29-12 but did not change it substantively. Transport Categories A and B and Normal Category rotorcraft were initially used under Part 133 operations, and after Amendment 133-6, restricted category rotorcraft were also included under Part 133 operations. The carriage of persons external to the rotorcraft for hire first came about when a Part 29 operator, exempt from Part 133, transferred harbor pilots to and from ships by a hoist and sling. The exemption was granted to study the feasibility of passenger transfer outside of the cabin. Grant of the exemption was based, in part, on similar, prior operations that had been conducted in Europe and Africa, for hire, with helicopters certified by the appropriate authorities and, in part, on similar military and public helicopter operations, not for hire, in the U.S. Subsequently, Amendment 133-9, adopted in January 1987, established a new Class D rotorcraft load combination (RLC) for transporting loads other than Class A, B, or C that are specifically approved by the administrator external to the rotorcraft. Amendment 133-9 also provided for the limitations and conditions for transport of external loads other than Class A, B, or C and the necessary, associated safety requirements. Part 29 has recently been changed to reflect RLC Class D requirements. Also, the scope and thus the title of the standard have changed from "External load attaching means" to "External loads" to reflect the more comprehensive approach for external loads required to ensure the proper level-of-safety.

(1) In other Nations the operations standards have developed differently and more diversely and do not necessarily use the RLC Class A, B, C and D definitions of § 1.1 in the same way as FAA operations standards do. Thus the International commonality of this advisory material (like § 29.865) is based on whether or not an external load is jettisonable or non-jettisonable and whether or not the load is HEC or NHEC.

(2) Whenever possible, the more generic, internationally harmonized terminology (i.e., jettisonable or non-jettisonable and HEC or NHEC) is used in this material. However, references to U.S. operational terms are made in parentheses where deemed necessary and tabulated to ensure clarity of purpose and proper, consistent approvals to U.S. operations standards.

b. Explanation.

(1) This advisory material contains guidance for certification of helicopter external load attaching means and load carrying systems to be used in conjunction with operating rules such as Part 133, "Rotorcraft External Load Operations." Subpart D of Part 133 contains supplemental U.S. airworthiness requirements. FAR Part 1 defines four RLC classes that are approvable under the U.S. Part 133 operating rules and that are eligible for certification under § 29.865. The four U.S. RLC classes are summarized in figure AC 29 MG 12-1 and discussed in paragraph d. Under U.S. operating rules RLC Classes A, B, and C are eligible, under specific restrictions, for both human external cargo (HEC) and nonhuman external cargo (NHEC) operations. However, under U.S. operating rules, RLC Class D only is eligible for transporting HEC for compensation (see figure AC 29 MG 12-1). For further information, AC 133-1A, "Rotorcraft External-Load Operations in Accordance with FAR Part 133," October 16, 1979, may be reviewed. Also, paragraph AC 29.25 (reference § 29.25) concerns, in part, jettisonable external cargo.

(2) FAR 29.865 provides a minimum level of safety for rotorcraft designs to be used with operating rules such as Part 133. Certain aspects of operations such as microwave tower and high-line wire work may also be regulated separately by other Federal agencies such as DOE, EPA, and OSHA or by other international entities. For applications that could come under multiple agency regulation (or regulation by other entities), special certification emphasis will be required by both the applicant and the certifying authority to ensure all relevant safety requirements are identified and met. Potential additional requirements, where thought to exist, are noted herein.

(3) The methods of this AC are intended to apply only to either new designs or to major modifications that occur after the effective date of Amendment 29-43 (i.e., "ADD DATE"). Thus it is not intended that these requirements be imposed retroactively. However, after the effective date of Amendment 29-43, all applications to certify new rotorcraft systems for NHEC or HEC operations would be required to comply with the equipment standards, as well as, the operational requirements in effect at that time.

c. Definitions.

(1) Applicable cargo type. The cargo type (i.e., NHEC, HEC, or both) that each RLC Class is eligible to use by regulation (figure AC 29 MG 12-1 contains explicit definitions for U.S. Part 133 Operations).

(2) Backup Quick-Release Subsystem (BQRS). The secondary or "second choice" subsystem used to perform a normal or emergency jettison of external cargo.

(3) Cargo. The part of any Rotorcraft-Load Combination that is removable, changeable, and is attached to the rotorcraft by an approved means.

(4) Cargo hook. A hook that can be rated for both HEC and NHEC. It is typically used by being fixed directly to a designated hardpoint on the rotorcraft.

(5) Critical configuration. In cases where NHEC or HEC can have more than one shape, center-of-gravity, center-of-lift, and/or be carried at more than one distance in flight from the rotorcraft attachment, a critical configuration for certification purposes may or may not be determinable. If such a critical configuration can be shown to exist, then it may be examined for approval as a "worst case" (in lieu of examining the entire range of configurations that exist) to satisfy a particular certification criterion or several criteria, as appropriate.

(6) Dual actuation device (DAD). This is a sequential control that requires two distinct actions in series for actuation. One example is a covered switch that would require cover removal (or flip-up) followed by a switch activation for load release to occur. Another example is removal of a lock pin followed by a "then free" switch or lever activation for load release to occur. Under this definition, a load release switch protected by an uncovered switch guard is not acceptable.

(7) Emergency jettison (or complete load release). The intentional, instantaneous release of NHEC or HEC in a preset sequence by the QRS that is normally performed to achieve safer operation in an emergency (i.e., nonoptimum situation).

(8) External fixture. A structure external to and in addition to the basic airframe that does not have true jettison capability and has no significant payload capability in addition to its own weight. An example is an agricultural spray boom. These configurations are not "External Loads" certifiable under § 29.865.

(9) Fixed line flyaway. This is a helicopter extrication technique in which a person or persons in a PCDS are connected to a rope or cable attached to a helicopter. The aircraft lifts off with the HEC carried below it. The exact length of the line depends on the specific needs of the operation.

(10) Human external cargo (HEC). A person(s) that at some point in the operation is carried external to the rotorcraft. (Figure AC 29 MG 12-1 contains explicit definitions for U.S. Part 133 Operations).

(11) Nonhuman external cargo (NHEC). Any external cargo operation that does not at any time involve a person(s) carried external to the rotorcraft (figure AC 29 MG 12-1 contains explicit definitions for U.S. Part 133 Operations).

(12) Normal jettison (or selective load release). The intentional release, normally at optimum jettison conditions, of an NHEC.

(13) Personnel carrying device system (PCDS). The entire attached or suspended system used to carry HEC. This is any HEC carrying configuration such as a suspended (e.g., winch/hoist, cable, harness) HEC system or an attached (e.g., a rigid basket or cage attached to skids) HEC system.

(14) Primary Quick-Release Subsystem (PQRS). The primary or "first choice" subsystem used to perform a normal or emergency jettison of external cargo.

(15) Quick-release system (QRS). The entire release system for jettisonable external cargo, (i.e., the sum total of both the primary and backup quick-release subsystems). The QRS consists of all components including the controls, the release devices, and everything in between.

(16) Rescue hook (or hook). A hook that can be rated for both HEC and NHEC. It is typically used in conjunction with a winch/hoist or equivalent system.

(17) Spider: A spider is a system of attaching a lowering cable or rope or a harness to an HEC (or NHEC) RLC to eliminate unwanted flight dynamics during operations. A spider usually has four or more legs (or load paths) that connect to various points of a PCDS to equalize loading and prevent spinning, twisting, or other undesirable flight dynamics.

(18) True jettison capability. The ability to safely release an external load using an approved QRS in 30 seconds or less.

NOTE: In all cases, a PQRS should release the external load in less than 5 seconds. Many PQRS's will release the external load in milliseconds, once the activation device is triggered. However a manual BQRS such as a set of cable cutters could take as much as 30 seconds to release the external load. The 30 seconds would be measured starting from the time the release command is given and ending when the external load is cut loose.

(19) True payload capability. The ability of an external device or tank to carry a significant payload in addition to its own weight. If little or no payload can be carried, the external device or tank is an external fixture (see definition).

(20) Type inspection authorization (TIA). This is FAA Form 8110-1. It is used only for the purpose of authorizing official ground inspections and flight tests necessary to fulfill the requirements for type certification or supplemental type certification. Order 8110.4, Chapter 2, Section 1, Paragraph 16, states the criteria for TIA issuance.

(21) Winch/hoist. A winch is defined as a device that can employ a cable and drum or other means to exert a horizontal (i.e., x-rotorcraft axis) pull. A hoist is a similar device that exerts a vertical pull (i.e., a pull that does not typically exceed a 30-degree cone measured around the z-rotorcraft axis). The majority of "pull" devices used on rotorcraft are hoists. However, since a winch can be used to perform a hoist function by

use of a 90 degree cable direction change device (such as a pulley or pulley system), a winch system is approvable. Thus the terms "winch/hoist" and "winch/hoist system" are used throughout this AC.

(22) Winch/hoist demonstration cycle (or "one cycle"). This is the complete extension and retraction of at least 95 percent of the actual cable length, or 100 percent of the cable length capable of being used in service (i.e., that would activate any extension/retraction limiting devices), whichever is greater.

(23) Winch/hoist load-speed combinations. Some winch/hoist designs are such that the extension/retraction speed slows down as the load increases or near the end of a cable extension. Other winch/hoist designs maintain a constant speed as the load is varied. In the latter design, the load-speed combination simply means the variation in load at the constant design speed of the winch/hoist.

d. Procedures. Because of the technical detail contained in subparagraph (d); the following index is provided to assist in locating specific compliance procedures.

INDEX TO SECTION (d): "PROCEDURES"		
SUBSECTION	SUBSECTION TITLE	PAGE
d(1)	General Compliance Procedures for § 29.865	7
d(2)	General Static Structural Substantiation Procedures for § 29.865(a)	8
d(3)	Compliance Procedures for Functional Reliability and Durability Demonstration of Winch/Hoist Systems Under § 29.865(a) and § 29.865(b)(3)(i)	13
d(4)	Compliance Procedures for Cargo Hooks (or Equivalent Devices) and Their Related Systems under § 29.865(a), (b), and (c)	19
d(5)	Compliance Procedures for Maximum Limit Load Magnitude Determination for all Jettisonable RLC Applications under § 29.865(a)	21
d(6)	Compliance Procedures for Basic Load Distribution and Analysis under § 29.865(a)	21
d(7)	Compliance Procedures for General QRS Certification and Installation under § 29.865(b) and § 29.865(c)	23
d(8)	Compliance Procedures for Reliability Determination for Jettisonable NHEC and HEC QRS's and Devices under § 29.865(b)(3)	23
d(9)	Compliance Procedures for Electromagnetic Interference under § 29.865(b)(3)(i)	26
d(10)	General Compliance Procedures for HEC Applications under § 29.865(c)(1)	27
d(11)	General Compliance Procedures for Jettisonable HEC Operations under § 29.865(c)(1)	27
d(12)	Compliance Procedures for QRS's under § 29.865(c)(1)	28
d(13)	Compliance Procedures for PCDS's under § 29.865(c)(2)	28
d(14)	Summary of Current PCDS Designs that Relate to § 29.865(c)(2)	31
d(15)	Compliance Procedures for QRS Design Installation and Placarding under § 29.865(c)(3)	32

INDEX TO SECTION (d): "PROCEDURES"		
SUBSECTION	SUBSECTION TITLE	PAGE
d(16)	Compliance Procedures for Intercom Systems for HEC Operations under § 29.865(c)(4)	32
d(17)	Compliance Procedures for Flight Manual Procedures and Limitations for HEC Operations under § 29.865(c)(5)	32
d(18)	Compliance Procedures for Special Conditions Encountered in Operations	32
d(19)	Compliance Procedures for Flight Test Verification Work under § 29.865(d)	32
d(20)	Compliance Procedures for External Loads Placards and Markings under § 29.865(e)	37
d(21)	Compliance Procedures for Fatigue Substantiation under § 29.865(f)	37
d(22)	Compliance Procedures for Agricultural Installations	37
d(23)	Compliance Procedures for External Tank Configurations	38
d(24)	Compliance Procedures for Logging Operations	38
d(25)	Compliance Procedures for Noise Certification	38
d(26)	Compliance Procedures for Inspection and Maintenance	38

(1) General Compliance Procedures for § 29.865: For compliance with § 29.865, the applicant should clearly identify the Parts 1 and 133 RLC's (i.e., the type of operations) that are being applied for and all applicable cargo types (i.e., NHEC or HEC) that will be used (see figure AC 29 MG 12-1 following, for specific U.S. definitions). The structural loads and operating envelopes for each RLC class and applicable cargo type should be determined and used to formulate the flight manual supplement and basic loads report. The applicant should show by analysis, test, or both, that the rotorcraft structure, the external load attachment means, and (for HEC operations) the PCDS meet the specific requirements of §§ 29.865, 133.41, 133.43, 133.45, and the other relevant requirements of Part 29 for the proposed operating envelope.

In general, for compliance with § 29.865, the methods described by the following, procedural paragraphs are acceptable.

NOTE: It is possible, if approvable, to carry both HEC and NHEC externally, simultaneously as two separate external loads. However, in no case is it intended that

the approved Maximum Internal Gross Weight be exceeded for any approved HEC configuration (or combined NHEC/HEC configuration) in normal operations.

(2) General Static Structural Substantiation Procedures for § 29.865(a): The following static structural substantiation methods should be used (paragraph d(21) describes the fatigue substantiation methodology).

(i) Static structural substantiation: The following methods of static structural substantiation should be employed.

(A) NHEC applications. In most cases a standard static analysis alone is acceptable to show compliance.

(B) HEC applications. If a safety factor of 3.0 or more on the yield strength of the weakest component in the QRS, PCDS, and attachment(s) load path is used, only an analysis is required for certification. Otherwise, both an analysis and a full-scale ultimate load test of relevant parts of the QRS, PCDS, and its attachments that form the HEC load path(s) should be submitted.

(ii) NHEC applications. For NHEC applications, use of 2.5 g vertical limit load factor (N_{ZW}) at the maximum substantiatable cargo load (which is typical for heavy gross weight NHEC hauling configurations) is required by § 29.865(a). This 2.5 g limit load factor is based on an engineering evaluation and a rationalization of § 29.337 for high gross weight applications.

(iii) HEC applications. For HEC applications, which typically involve lower gross weight configurations, a higher limit load factor is required to ensure that limit load is never exceeded in service. The higher load factor for HEC applications should be the analytically derived maximum vertical limit load factor for the restricted operating envelope being applied for or, as a conservative option, a vertical limit load factor of 3.5 g's (reference § 29.337). Unless a more rational proposal is received, for HEC applications where maximum operating gross weight for the external load is between design maximum weight and design minimum weight, linear interpolation can be used between $N_{ZW\ MIN}$ and $N_{ZW\ MAX}$ versus gross weight to determine the design limit load factor. In no case may the vertical limit load factor be less than 2.5 g's for any RLC application for HEC. For example, an HEC external load-carrying attachment or PCDS that is certified to a limit vertical load factor of 2.5 g's and is installed in a minimum gross weight configuration rotorcraft capable of generating a vertical limit load factor of 3.2 g's could experience ((3.2/[2.5 x 1.5]) x 100) = 85 percent of ultimate load (i.e., 128 percent of limit load) under worst case conditions with new external hardware. However, if factors such as wear and corrosion have affected the structural integrity of the external load carrying hardware, the limit and ultimate load capability may decrease significantly and the current design standard could be exceeded. Certification policy is not to exceed limit load in service. Therefore, to meet the requirement of § 29.865(a), the external load carrying hardware would need to be designed to a higher design standard (i.e., to withstand a limit load factor of 3.2g's.).

FIGURE AC 29 MG 12-1
U.S. OPERATIONAL (PART 133) ROTORCRAFT-LOAD COMBINATION
VERSUS APPLICABLE CARGO TYPE DATA AND DEFINITION SUMMARY

ROTORCRAFT-LOAD COMBINATION CLASS, CARGO TYPE	REQUIREMENT FOR CATEGORY "A" RATING AND OEI HOVER CAPABILITY
A, NHEC	NONE
A, HEC (SEE NOTE 2)	NONE
B, NHEC	NONE
B, HEC (SEE NOTE 2)	NONE
C, NHEC	NONE
C, HEC (SEE NOTE 2)	NONE
D, NHEC	NOT APPLICABLE (SEE NOTE 4)
D, HEC (SEE NOTE 1)	YES (SEE NOTE 3)

NOTES:

1. A person(s) (passenger OTHER than a crewmember and/or OTHER than a person who is essential to the external-load operation), when carried as an external load, can only be carried as a Class D RLC. These persons are being carried (transported).

2. A person WHO IS a crewmember or a person WHO IS essential and directly connected with the external-load operation is not being carried (transported) as a passenger. They are, instead, part of the operation. These persons are considered as RLC Class A, B, or C HEC as appropriate to the operation.

3. The rotorcraft are required to meet the Category A engine isolation requirements of Part 29 and have OEI/OGE hover performance capability, over the operating and weight envelopes applied for, to be eligible for certification to the Class D RLC.

(FIGURE AC 29 MG 12-1—continued)

4. NHEC Class D operations are not applicable. An alternate NHEC operational configuration, using the same rotorcraft, would become either a Class A, B, or C NHEC operation.

5. A Class D RLC operation may be conducted with an external cargo design having a physical configuration that meets the definitions of § 1.1 for RLC Class A, B, or C.

6. OEI power settings should not be used for certification credit for normal operations. However, they are available for the OEI emergency scenarios for which approval has been granted whether or not a NHEC or HEC is involved. For determination of the maximum rotorcraft gross weight approved for Class D operations (i.e., HEC operations performed with a multiengine rotorcraft capable of OEI HOGE, it is intended that use of the maximum OEI Power approved for the rotorcraft engine and drive system be allowed after failure of the critical engine (when applied in conjunction with an approved Class D operating procedure). Thus, it would be acceptable to base the required OEI/OGE hover performance capability for a Class D operation on a 30-second OEI power rating if the operator can demonstrate that the HEC can be safely transitioned to a flight condition where the HEC can be retrieved inside the rotorcraft for an execution of a normal OEI landing. If the specific operation for which the Class operation approval is requested does not provide for safe disposition of the HEC when using a time limited OEI rating, the Class D operation gross weight should be limited to a gross weight where OEI/OGE hover capability can be demonstrated for a continuous time period.

7. Figure AC 29 MG 12-1 is based on analogous information contained in Chapter 96 of FAA Order 8700.1. In case of conflicting information, Order 8700.1 takes precedence.

d(2) (continued)

(iv) Critical basic load determination. For all § 29.865(a) applications, obtain the gross weight range limits, obtain the corresponding limit load factors (N_{ZW}), and statically substantiate the system, in accordance with the applied for external cargo application(s) [Reference d(1)], for the critical load(s). This determines the critical basic loads and associated operating envelope for the RLC's and applicable cargo types applied for.

(v) Critical Structural Case. For § 29.865(a) applications involving more than one RLC class and/or cargo type, structural substantiation is required only for the most critical case (Reference d(1)) if accurately determinable from analysis.

(vi) Placards and markings. For all § 29.865(a) applications, appropriate placards, markings, and flight manual restrictions should be provided for items such as operating procedures, load capacities, and operational restrictions for all external load systems and devices (see also, d(13)(iii)(B)). Each placard, marking, and flight manual supplement should be checked during TIA flight testing (see also, d(20)).

(vii) Vertical Limit and Ultimate Load Factors. For all § 29.865(a) applications, the basic vertical limit load factor (N_{ZW}) from d(2) is converted to ultimate load by multiplying the maximum applied load [i.e., the sum of the carrying device load, its supporting external structure load, and the maximum cargo load] by 1.5. (For restricted category approvals, see guidance in paragraph AC 29 MG 5.) This ultimate load is used to substantiate all existing structure affected by and all added structure associated with the load carrying device, its attachments, and its cargo. Casting factors, fitting factors, and/or other dynamic load factors are to be applied where appropriate. For all HEC applications, the minimum weight of each occupant carried externally should be assumed, for analysis or test purposes, to be that of the 95 percentile 202-pound man (reference MIL-STD-1472, "Human Engineering Design Criteria for Military Systems, Equipment, and Facilities").

NOTE: If the HEC is engaged in special work tasks that would typically employ devices of significant added weight (such as heavy backpacks or fire extinguishers), the weight of these devices should be added to that of the 95 percentile 202-pound man and used in the structural analysis.

(viii) Winch/hoist system limit load. For all § 29.865(a) applications that employ winch/hoist systems to raise or lower either an HEC or NHEC from a hover, or other phase of flight, the system limit load is required to be properly determined based on the characteristics of the winch/hoist system and its installation such as mechanical advantage, static strength of the winch/hoist, static strength of its installation, allowable cable length, and the payload for any operating scenario being applied for. One acceptable method of determining the winch/hoist system limit load for any RLC and any applicable cargo type is by the following procedure:

d(2) (continued)

NOTE: In cases where either winch/hoist cables or long-line cables are utilized, a new structural system is established. Certain characteristics of this system should be examined during certification to ensure that either no hazardous failure modes exist or that they are acceptably minimized. For example, the cable or long line may (in conjunction with the rotorcraft) exhibit an unacceptable natural frequency that could be excited by sources internal to the overall structural system (i.e., the rotorcraft) or by sources external to the system. Another example is the loading effect of the cable or long line acting as a spring between the rotorcraft and the suspended external load or ground, respectively, either during flight or (when in ground contact) at the time of load release. These conditions should be reviewed and, if potentially hazardous, minimized by controlling relevant overall structural system parameters such as cable length.

(A) Determine the basic loads that fail and unspool the winch/hoist or its installation, respectively.

NOTE: This determination should be based primarily on static strength; however, any dynamic load magnification factors that are significant should be accounted for.

(B) Select the lower of the two values from (i) as the ultimate load of the winch/hoist system installation.

(C) Divide the selected ultimate load by 1.5 to determine the true structural limit load of the system.

(D) Determine the manufacturer's approved (or applicants applied for) "limit design safety factor." Divide this factor into the true structural limit load (from (c) above) to determine the winch/hoist system's working (or placarded) limit load. As a minimum, this factor should equal or exceed the value of all the factors defined under d(2)(vii) when multiplied together.

NOTE: Most winch/hoist manufacturers either use a "Limit design safety factor" of 4 to 5 on ultimate to determine their placarded limit load [i.e., allowable LL = UL/(4 to 5)]; or they use a safety factor of approximately 3 on yield to determine their placarded limit load [i.e., allowable LL = true LL/3.0]. In some cases, the load is swung through a cone of a 30 degree half apex angle. Typical structural design criteria is for the winch/hoist to remain in one piece and still function after experiencing true limit load, and to remain in one piece, but not necessarily function, after experiencing true ultimate load. These relatively large structural safety factors are used to conservatively account for phenomena such as casting factors in flight dynamic loading conditions, and wear and tear between phased inspections.

d(2) (continued)

(E) Compare the system's derived limit load to the applied for one "g" payload multiplied by the maximum downward vertical load factor (N_{ZWMAX}) from paragraph d(2) to determine the critical payload's limit value.

(F) If the critical limit payload is equal to or less than the system's derived limit load, the installation is structurally approvable as presented.

NOTE: For HEC applications, the critical limit payload should be equal to or more than the combined weight of the PCDS and its maximum number of passengers (See also d(2)(vii), for passenger weight values).

(G) If the critical limit payload exceeds the system's derived limit load, then one of the following options should be considered:

(1) Disapproval.

(2) Application for exemption.

(3) Reduction of the applied for critical limit payload to less than or equal to the system's derived limit load.

(4) Redesign of the winch/hoist system (and installation) to increase its derived limit load to equal to or greater than the critical payload.

(5) A combination of options *(3)* and *(4)*.

(6) Approvable operating restrictions to reduce N_{ZWMAX} and the corresponding critical limit payload to less than or equal to the system's derived limit load.

NOTE: Additional combinations of external load and operating restrictions may be subsequently approved under operational requirements as long as the FAR 29 structural limits of the basic certification are not exceeded, (i.e., equivalent safety is maintained).

(3) Functional Reliability and Durability Compliance Procedures for Winch/Hoist Systems under §§ 29.865(b)(3)(i) and (c)(2): It is recommended that winch/hoist systems and their installations in the rotorcraft should be designed, certified, and demonstrated as follows:

(i) General. Winch/hoist systems should be approved to acceptable aircraft industry standards. These standards and any related manufacturer's certificates of production/qualification, thereto, should be presented by the applicant as

d(3) (continued)

part of the approval package. Two typical winch/hoist approval scenarios exist. They are:

(A) For established, previously approved winch/hoist unit designs that are to be placed in a new rotorcraft installation, certification credit (to Amendment 29-43) for the unit itself can be given based on a successful unit design review (or a manufacturer's statement-of-certification accompanied by an FAA Form 8110-3 with appropriate DER approvals) that shows proper previous approval and that shows no new design changes have been made that adversely affect the reliability or function of the unit (i.e., an update of the Failure Modes and Effects Analysis (FMEA)). If so approved, then only the winch/hoist installation need be approved during certification.

(B) For new winch/hoist unit designs, the unit should be either certified to a standard aircraft industry specification that has been previously and successfully used to certify winch/hoist units, or an equivalent specification should be developed and met during the certification process.

NOTE: Background information. There are no generic industry, FAA, or military specifications currently available to apply to winch/hoist units. Thus, the detail specifications for winch/hoist unit certifications are typically generated as follows: 1) For military applications, the military dictates the basic winch/hoist unit specifications in the prime aircraft development specification. The airframe manufacturer then typically either writes or has a winch/hoist vendor write a detailed unit certification specification that includes all necessary, detailed certification criteria; 2) For commercial applications (that install the winch/hoist unit under either a new or amended type certificate or a supplemental type certificate), the airframe manufacturer typically either writes a detailed winch/hoist unit specification or has a vendor (usually the winch/hoist unit manufacturer) write the detailed certification specifications and procedures (based on the unit manufacturer's experience and the customer needs during the installation process). For either method, the FAA approves and adds the specification to the type data file during the installation approval process.

(ii) NHEC applications. The winch/hoist/rescue hook system should be reliable for the phases of flight in which it is operable, unstowed, partially unstowed and/or in which NHEC is carried. The primary electrical and/or mechanical failure modes that should be identified and minimized are unintended load release by any means, and loss of continued safe flight and landing capabilities due to a winch/hoist/rescue hook system failure. However, any other winch/hoist/rescue hook system failure that could lead to a catastrophic failure mode for the rotorcraft should also be minimized. Loss of winch/hoist operational control should also be considered. The reliability of the system should be demonstrated by completion and approval of the following:

d(3) (continued)

NOTE: It is assumed that only 1 winch/hoist cycle will typically occur per flight. This rationale has been used to determine the 10 demonstration cycles of d(3)(ii)(B) below. However, if a particular application should potentially involve more than one winch/hoist cycle per flight, then the number of demonstration cycles of d(3)(ii)(B) should be increased accordingly.

(A) A winch/hoist/rescue hook system level FMEA that identifies and minimizes any potential catastrophic failures should be conducted.

(B) Unless a more rational test method is presented and approved, a repetitive test of all functional devices in accordance with d(3)(vii) that exercises the entire system's functional parameters at least 10 times should be conducted. These repetitive tests may be conducted on the rotorcraft, or by using a bench simulation that accurately replicates the rotorcraft installation.

NOTE: If a more rational method of compliance is presented that clearly shows that an equivalent level of safety can be achieved in fewer than 10 system test cycles, the method of compliance may be acceptable.

NOTE: For properly certified winch/hoist units (Ref. d(3)(i)) that have established acceptable service histories, full certification credit for the unit itself may be given. However, each new installation is required to be approved individually, unless the installation is either identical or similar to an existing approved installation with an acceptable service history. If the new installation is only similar to an acceptable existing installation, then, for a similarity approval, all differences should be clearly stated, rationalized, analyzed, and/or tested to show they do not adversely affect the new installation (i.e., equivalent safety should be provided).

(C) A winch/hoist unit environmental qualification program that includes consideration of high and low temperatures (typically -40F to +150F), altitudes to 12,000 feet, humidity, salt spray, sand and dust, vibration, shock, rain, fungus, and acceleration should be conducted. Testing should be conducted in accordance with RTCA/DO-160 and/or MIL-STD-810 for high and low temperature tests and for vibrations. The winch/hoist manufacturers should submit a test plan and follow-on test reports to the applicant and FAA following completion of qualification. It is intended that the winch/hoist itself either be prequalified to the EMI and lightning threat levels specified for NHEC and/or HEC or that it be qualified as part of the entire onboard QRS to these threat levels.

(D) All instructions and documents necessary for continued airworthiness should be provided.

d(3) (continued)

(E) The methods of compliance in other relevant paragraphs of this AC or equivalent methods should be employed.

(iii) HEC applications. The winch/hoist/rescue hook system should be reliable for the phases of flight in which it is operable, unstowed, partially unstowed and/or in which HEC is carried. The primary electrical and/or mechanical failure modes that should be identified and minimized are unintended load release by any means and loss of continued safe flight and landing capability due to a winch/hoist/rescue hook system failure. However, any other winch/hoist/rescue hook system failure that could lead to a catastrophic failure mode for the rotorcraft should also be minimized. The winch/hoist should be disabled (or an overriding, fail-safe mechanical safety device such as either a flagged removable shear pin or a load-lowering brake should be utilized) to prevent inadvertent load unspooling or release during any extended flight phases which involve HEC and in which winch/hoist operation is not intended. Loss of winch/hoist operational control should also be considered. The reliability of the system should be demonstrated by completion and approval of the following:

NOTE: It is assumed that only one winch/hoist cycle will typically occur per flight. This rationale has been used to determine the 30 demonstration cycles of d(3)(iii)(B) below. However, if a particular application should potentially involve more than one winch/hoist cycle per flight, then the number of demonstration cycles of d(3)(iii)(B) should be increased accordingly.

(A) A winch/hoist/rescue hook system level FMEA that identifies and minimizes any potential catastrophic failures should be conducted.

(B) Unless a more rational test method is presented and approved, a repetitive test of all functional devices in accordance with d(3)(vii) that exercises the entire system's functional parameters at least 30 times should be accomplished. These repetitive tests may be conducted on the rotorcraft or by using a bench simulation test that accurately replicates the rotorcraft installation.

NOTE: If a more rational method of compliance is presented that clearly shows that an equivalent level of safety can be achieved in fewer than 30 system test cycles, the method of compliance may be acceptable.

NOTE: For properly certified winch/hoist units (Ref. d(3)(i)) that have established acceptable service histories, full certification credit for the unit itself may be given. However, each new installation is required to be approved individually, unless the installation is either identical or similar to an existing approved installation with an acceptable service history. If the new installation is only similar to an acceptable existing installation, then for a similarity approval, all differences should be clearly

d(3) (continued)

stated, rationalized, analyzed, and/or tested to show they do not adversely affect the new installation (i.e., equivalent safety should be provided).

(C) A winch/hoist system environmental qualification program that includes consideration of high and low temperatures (typically -40F to +150F), altitudes to 12,000 feet, humidity, salt spray, sand and dust, vibration, shock, rain, fungus, and acceleration should be conducted. Testing should be conducted in accordance with RTCA/DO-160 and/or MIL-STD-810 for high and low temperature tests and for vibrations. The winch/hoist manufacturers should submit a test plan and follow-on test reports to the applicant and FAA following completion of qualification. It is intended that the winch/hoist itself either be prequalified to the EMI and lightning threat levels specified for NHEC and/or HEC or that it be qualified as part of the entire onboard QRS to these threat levels.

(D) All instructions and documents necessary for continued airworthiness should be provided.

(E) The methods of compliance in other relevant paragraphs of this AC or equivalent methods should be employed.

(iv) Cable attachment. Either the cable should be positively attached to the winch/hoist drum and the attachment should have ultimate load capability, or equivalent means should be provided to minimize the possibility of inadvertent, complete, cable unspooling.

NOTE: Even though the placarded winch/hoist system load rating is much less, most winch/hoist cables are rated to a minimum of 3,300 lbs. limit load. Typically, cables have a neutral twist to minimize load oscillation.

(v) Cable length and marking. A length of cable nearest the cable's attachment to the winch/hoist drum should be visually marked to indicate to the operator that the cable is near full extension. The length of cable to be marked is a function of the maximum extension speed of the system and the operator's reaction time needed to prevent cable run out. It should be determined during certification demonstration tests. In no case should the length be less than 3 1/2 drum circumferences.

(vi) Cable stops. Means should be present to automatically stop cable movement quickly when the system's extension and retraction operational limits are reached.

(vii) Winch/hoist system load-speed combination ground tests. The load versus speed combinations of the winch/hoist should be demonstrated on the ground (either using an accurate engineering mock-up or a rotorcraft) by showing repeatability

d(3) (continued)

of the no load-speed combination, the 50 percent load-speed combination, the 75 percent load-speed combination and the 100 percent (i.e., system rated limit) load-speed combination. If more than one operational speed range exists, the preceding tests should be performed at either all speeds, or at the most critical speed if it can be determined. [Reference d(3)(ii)(B) and d(3)(iii)(B)].

(A) At least 1/10 of the demonstration cycles (see definition) should include the maximum aft angular displacement of the load from the drum, applied for under § 29.865(a).

(B) A minimum of six consecutive, complete operation cycles should be conducted at the system's 100 percent (i.e., system limit rated) load-speed combination.

(C) In addition, the demonstration should cover all normal and emergency modes of intended operation and should include operation of all control devices such as limit switches, braking devices, and overload sensors in the system.

(D) All quick disconnect devices and cable cutters should be demonstrated at 0 percent, 25 percent, 50 percent, 75 percent, and 100 percent of system limit load or at the most critical percent, if it can be determined.

NOTE: Some winch/hoist designs have built-in cable tensioning devices that function at the no load-speed combination, as well as at other load-speed combinations. This device should be demonstrated to work during the no load-speed and other load-speed cable-cutting demonstrations.

(E) All electrical and mechanical systems and load release devices for any jettisonable NHEC or HEC RLC should be shown to be reliable by both analysis and by testing done in accordance with the combined criteria of d(8) and this paragraph.

(F) Any devices or methods used to increase the mechanical advantage of the winch/hoist should also be demonstrated.

(G) During a portion of each demonstration cycle, the winch/hoist should be operated from each station from which it can be controlled.

NOTE: A reasonable amount of starting and stopping during demonstration cycles is acceptable.

(viii) Winch/hoist system continued airworthiness. The design life of the winch/hoist system and any limited life components should be clearly identified, and the

d(3) (continued)

Airworthiness Limitations Section of the maintenance manual should include these requirements. For STC's, a maintenance manual supplement should be provided that includes these requirements.

NOTE: Design lives of winch/cable systems are typically between 5,000 to 8,000 cycles. One major manufacturer uses a specification requirement of 7,500 cycles. Some winch/hoist systems have usage time meters installed. Others may have cycle counters installed. Cycle counters should be considered for HEC operations and high load or other operations that may cause low-cycle fatigue failures (see also d(24)).

(ix) Winch/hoist system manual proofing. Operating manuals, flight manuals, maintenance manuals, and associated placards should be used and proofed during the demonstration.

(x) Winch/hoist system flight tests. An in-flight demonstration test of the winch/hoist system should be conducted for helicopters designed to carry NHEC or HEC. The rotorcraft should be flown to the extremes of the applicable maneuver flight envelope and to all conditions that are critical to strength, maneuverability, stability, and control, or any other factor affecting airworthiness. Unless a lesser load is determined to be more critical for either dynamic stability or other reasons; the maximum winch/hoist system rated load or, if less, the maximum load requested for approval (and the associated limit load data placards) should be used for these tests. The minimum winch/hoist system load (or zero load) should also be demonstrated in these tests. (See also d(19)(x).)

(4) Compliance Procedures for Cargo Hooks (or Equivalent Devices) and their Related Systems under §§ 29.865(a), (b), and (c): Cargo hooks or equivalent devices and their related systems, used for any external cargo type, should be approved to acceptable aircraft industry standards. These standards and any related manufacturer's certificates of production/qualification, thereto, should be presented by the applicant as part of the approval package.

(i) General. Cargo hook systems should have the same reliability goals and should be functionally demonstrated under critical loads for NHEC, HEC, or both in a manner identical to winch/hoist/rescue hook systems (reference d(3)). All engagement and release modes should be demonstrated. If the hook is used as a quick-release device, then release of critical loads should be demonstrated under conditions that simulate maximum allowable bank angles and speeds and any other critical operating conditions. Demonstration of any relatch features and any safety or warning devices should also be conducted. Demonstration of actual in-flight emergency quick-release capability may not be necessary if the quick-release capability can be acceptably simulated by other means.

d(4) (continued)

NOTE: Cargo hook manufacturers specify particular shapes, sizes, and cross sections for lifting eyes to ensure compatibility with their hook design (e.g., Breeze Eastern Service Bulletin CAB-100-41). Experience has shown that, under certain conditions, a load may inadvertently hang up because of improper geometry at the hook/eye interface that will not allow the eye to slide off an open hook as intended. See also the discussion of hook dynamic roll out (i.e., the converse-an unintentional load release) under d(8).

NOTE: Some cargo hook systems may employ two or more cargo hooks for fail safety (i.e., after a failure of any single hook the remaining system is capable of carrying limit load). These systems are approvable. However, loss of load by any single hook should be shown to not result in loss of control of the rotorcraft. In a dual hook system, if the hook itself is the quick-release device (i.e., if a single release point does not exist in the load path between the rotorcraft and the dual hooks), the pilot should have a dual PQRS that includes selectable, collocated individual quick releases that are independent for each hook used. A BQRS should also be present for each hook. For cargo hook systems with more than two hooks, either a single release point should be present in the load path between the rotorcraft and the multiple hook system or multiple PQRS/BQRS's should be present. The former arrangement would only require a single PQRS and BQRS. A single release point can be a single or multiple cable cutter or release.

NOTE: If possible (within the rotorcraft configuration's restrictions), a simple set of approved cable cutters can satisfy the requirement for either a PQRS or BQRS in a cargo hook system installation. However, in many cargo hook system installations, unless a special access panel or an equivalent means is present, a crewman typically cannot reach and cut the cable with a standard set of cable cutters.

(ii) NHEC cargo hook systems. For jettisonable NHEC applications, each cargo hook-

(A) Should have a sufficient amount of slack in the control cable to permit cargo hook movement without tripping the hook release.

(B) Should be shown to be reliable in a manner identical to winch/hoist systems under d(3)(ii).

(iii) HEC cargo hook systems. For jettisonable HEC applications, each cargo hook-

(A) Should have a sufficient amount of slack provided in the control cable to permit cargo hook movement without tripping the hook release.

d(4) (continued)

(B) Each cargo hook should be shown to be reliable in a manner identical to winch/hoist systems under d(3)(iii).

(C) Unless the cargo hook is to be the primary quick-release device, each cargo hook should be designed such that the load cannot be inadvertently released by operationally induced loads. For example, a simple cargo hook should have a one-way, spring loaded gate (i.e., "snap hook") that allows load attachment going into the gate but does not allow the gate to open (and subsequently lose the HEC) when an operationally induced load is applied in the opposite direction. For HEC applications, cargo hooks that double as quick-release devices should be carefully reviewed to ensure they are reliable. Paragraph d(8)(iii) discusses means of increasing the reliability of devices such as cargo hooks for HEC applications.

(iv) Other cargo hook system safety requirements. DOE, EPA, OSHA, and other Government Agencies may have special safety requirements for cargo hook design over and above the FAR's, such as a dual cargo hook requirement for certain HEC operations under multi-agency regulation.

(5) Compliance Procedures for Maximum Limit Load Magnitude Determination for all Jettisonable RLC Applications under §29.865(a): For all jettisonable RLC applications for any applicable cargo type seeking § 29.865(a) approval, the maximum limit external load for which certification is requested (even though it may otherwise be much less than the maximum system capacity; e.g., cargo hook capacity, etc.) should not exceed the rated capacity of the QRS release devices used in the applicant's design or, for HEC, the rated capacity of either the QRS devices, the PCDS, or its attachments--whichever is less. Relevant parts of the QRS and the entire PCDS should be analyzed and strength tested, with FAA witness, or otherwise structurally substantiated to determine their allowable limit load capacity (reference (d)(2)) if not previously FAA approved or produced to a recognized, approvable industry and/or military standard.

(6) Compliance Procedures for Basic Loads Analysis under § 29.865(a): For all jettisonable RLC applications of any applicable cargo type seeking compliance with § 29.865(a), the maximum ultimate external load is required to be applied at sling-load-line to rotorcraft vertical axis (Z axis) angles up to 30 degrees, in any geometric direction, in substantiating analyses or tests. The 30-degree angle may be reduced in some or all directions if impossible to obtain due to physical constraints or operating limitations.

(i) Maximum cable angle. The maximum allowable cable angle (from either a winch/hoist/rescue hook, cargo hook system, or other acceptable system configuration) should be determined and approved (reference d(3)). The angle approval should be based on structural requirements, mechanical interference limits,

d(6) (continued)

and flight handling characteristics over the most critical conditions and combinations of conditions in the approved flight envelope.

NOTE: In an emergency, in some cases, the combined design of the rotorcraft and the suspended system may be such that the 30-degree angle can be exceeded, to a limited extent, without catastrophic failure. The flight manual should clearly state this maximum angle value (in the aft direction relative to the Rotorcraft Z axis; for both maximum and minimum cable lengths) that should never be exceeded in any emergency in order to minimize the hazard of a related, catastrophic failure.

(ii) 30-degree maximum angle value. In no case should the design angle for HEC exceed 30 degrees from the vertical rotorcraft axis (i.e., Z axis). If the angle is reduced, appropriate placards and flight manual changes are required (reference d(2)).

(iii) Special cases. In some special NHEC jettisonable RLC operations, such as wire stringing, the 30-degree angle can be exceeded. These cases should be approved on a case-by-case basis by an engineering certification office. An issue paper should be used to document the exact limit operational parameters determined during certification. This is necessary because of the large variability of external loads and flight maneuvers that should be considered to establish safe operating limits for these operations. As a minimum, the maximum allowable load, the maximum allowable cable angles, the maximum flight envelope, the necessary limitation placards, and the necessary RFM procedures/restrictions should be accurately determined and documented. The maximum allowable structural load envelope should be clearly identified and determined. The fatigue spectrum created by this load envelope and its frequency of use (considering in particular the possibility of low cycle fatigue failures and significantly reduced component life limits) should be clearly identified, documented, and approved.

NOTE: There are two typical configurations that have been previously approved for attaching jettisonable NHEC loads in operations such as wire stringing. They are:

Weighted-Line Sidepull Configuration. In this method, a heavy dead weight is suspended below the cargo hook. The sidepull line (jettisonable load) is then attached to the dead weight or just above the weight. The rotorcraft then proceeds in forward or sideward flight and the weight pulls the sidepull-line (jettisonable load). This method is very inefficient for payload utilization since much of the rotorcraft load capacity is used to move the dead weight rather than pulling the sidepull line. Load limiting devices such as approved fuseable/frangible links should be considered for these applications to ensure limit load is not exceeded in service.

Sidepull-Fixture Sidepull Configuration. In this method, a QRS device is attached at the side of the rotorcraft (or in another equivalently functional location) and is

d(6) (continued)

arranged so the sidepull-line's (jettisonable load's) load path is through (or nearly through) the rotorcraft center of mass at a typical working fuel condition. This configuration is more payload efficient and has much better controllability characteristics than the deadweighted sidepull-line configuration. At least one STC has been issued for a sidepull-fixture configuration for use in operations.

(7) Compliance Procedures for General QRS Certification and Installation under § 29.865(b) and § 29.865(c): For jettisonable RLC's for any applicable cargo type, a PQRS is mandated that features an approved primary quick-release device to be installed on one of the pilot's primary controls, or in an equivalently accessible location. The use of an "equivalent accessible location is intended to be applied/reviewed on a case-by-case basis and to be used only where equivalent safety is clearly maintained. A BQRS with a backup quick-release device is also required. The PQRS, the BQRS, and their load release devices and subsystems (such as electronically actuated guillotines) should be separate (i.e., physically, systematically, and functionally redundant). Also, for the BQRS, the backup release control and release need not be mechanical. It is intended that less sophisticated BQRS's and load release devices (such as manual cable cutters) would, if separate, be acceptable. However, if separate devices of this type are to be used, they should be listed in the flight manual as a required device and have a dedicated, placarded storage location. Each quick-release device should be designed and located to allow the pilot or a crewmember to accomplish external cargo release without hazardously limiting the ability to control the rotorcraft during emergency situations. The flight manual should reflect the requirement for a crewmember and the related functions. For jettisonable HEC operations, further QRS requirements are contained in § 29.865(c). (See paragraphs d(8), d(9) and d(12) of this AC.) No PQRS or BQRS should require more than 30 seconds from the time an emergency is declared and the PQRS or BQRS quick release device is located and activated until the NHEC or HEC load is released. This should be clearly demonstrated in certification.

(8) Compliance Procedures for Reliability Determination for Jettisonable NHEC and HEC QRS's and Devices under § 29.865(b)(3): Jettisonable NHEC QRS's and devices and jettisonable HEC QRS's and devices are required to be reliable. One acceptable method of achieving the intended reliability goals is described as follows:

NOTE: For both NHEC and HEC designs, the phenomena of hook dynamic roll out should be considered, to the maximum practicable extent, to ensure that QRS reliability goals are not compromised. This is of utmost concern for HEC applications. Hook dynamic roll-out occurs during certain ground handling and flight conditions that may allow the lifting eye to work its way out of the hook (Reference figure AC 29 MG 12-2).

Some commercial hook shape and keeper designs are quite prone to hook dynamic roll-out. Military Standard hook designs have not been as prone to hook dynamic

d(8) (continued)

roll-out as have some commercial designs. Hook dynamic roll-out typically occurs when either the RLC's sling or harness is not properly attached to the hook, is blown by down draft, is dragged along the ground, is dragged through the water; or is otherwise placed into the dangerous hook/eye configuration, shown by figure AC 29 MG 12-2. This can occur during ground handling or can be caused by relative motion of the hook and eye in flight. The potential for hook dynamic roll-out can be minimized in design by specifying particular hook-and-eye shape and hook-and-eye cross-section combinations. For non-jettisonable RLC's, a push-pull pin (or an equivalent device) can be used to lock the hook keeper in place during operations. The hook dynamic roll-out service history of any off-the-shelf components to be utilized should also be reviewed to minimize the use of potential "bad-actors."

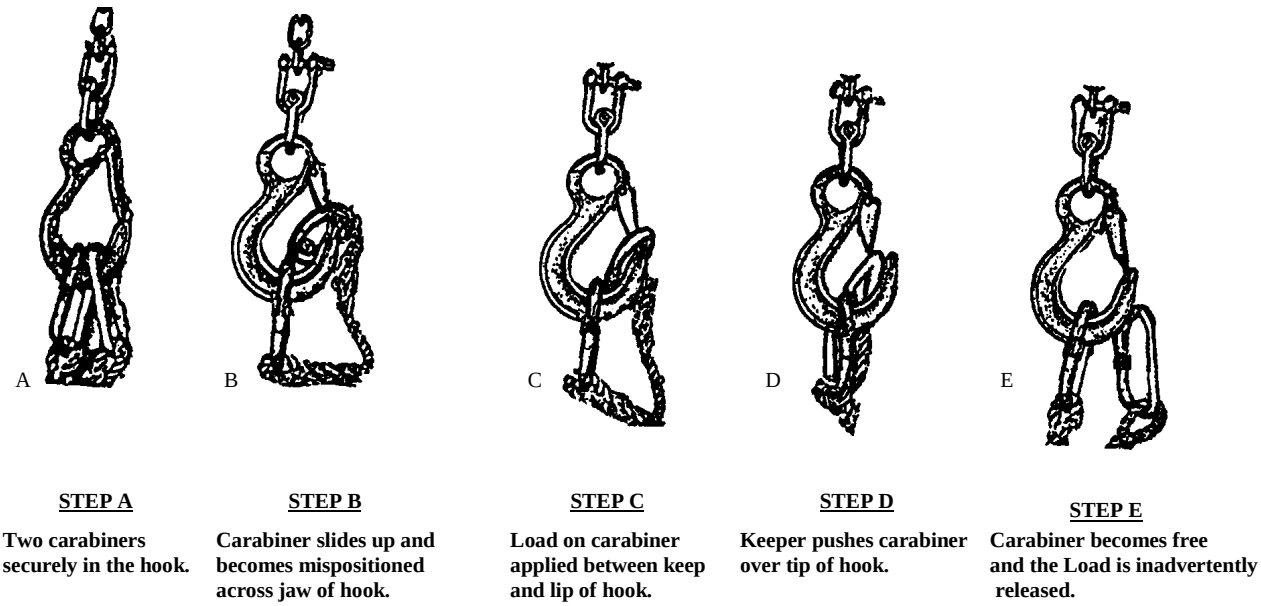

FIGURE AC 29 MG 12-2: SEQUENTIAL SIMULATION OF HOOK DYNAMIC ROLL-OUT

(i) Jettisonable NHEC designs. The QRS and the load suspension and retention designs should be reliable. The primary electrical and/or mechanical failure modes that should be identified and minimized are load release by any means and loss of continued safe flight and landing capability due to a QRS failure. However, any other failure that could lead to a catastrophic failure mode for the rotorcraft and its occupants should also be identified and minimized. The reliability of the system should be demonstrated by completion and approval of the following:

(A) A QRS level FMEA that identifies and minimizes any potential catastrophic failures.

d(8) (continued)

(B) A repetitive test of all functioning devices that affect or comprise the QRS and that tests all critical conditions or combinations of critical conditions at least 10 times each, using both the primary and backup QRS subsystems.

(C) An environmental qualification program such as that described in d(3)(ii)(C).

(D) Use of the methods of compliance in other relevant paragraphs of the AC or equivalent methods.

(ii) Jettisonable HEC designs. The QRS and the load suspension and retention designs should be reliable. The primary electrical and/or mechanical failure modes that should be identified and minimized are unintended load release by any means and loss of continued safe flight and landing capability due to a QRS failure. However, any other failure that could lead to a catastrophic failure for the rotorcraft and its occupants (either internal, external, or both) should also be identified and minimized. The reliability of the system should be demonstrated by completion and approval of the following:

(A) A QRS level FMEA that identifies and minimizes all failure modes, including any potential catastrophic failures.

(B) A repetitive test of all functioning devices that affects or comprises the QRS and that tests all critical conditions or combinations of critical conditions at least 30 times each, using both the primary and backup subsystems.

(C) An environmental qualification program such as that described in d(3)(ii)(C).

(D) Use of the methods of compliance in other relevant paragraphs of the AC or equivalent methods.

(iii) Special Cases. In some cases, an acceptable reliability for jettisonable HEC operations can be shown by temporarily deactivating a particular QRS, PQRS, and/or BQRS subsystem used for NHEC that is not otherwise reliable enough for use with jettisonable HEC. For example, this could be accomplished by adding an approved reliable QRS device for HEC such as alternate, ultimate load path across a relatively low reliability, jettisonable NHEC quick-release device or by adding another reliable fail-safe device (e.g., adding an approved, reliable safety strap as a parallel ultimate load path). The same reliability goal for HEC use could also be achieved by adding another, reliable fail-safe device such as a safing pin to an electronically actuated guillotine cutter to upgrade the system reliability to be acceptable for HEC carriage. For some designs, cargo hooks can be made more

d(8) (continued)

reliable by wiring them shut with an approved gage of safety wire. All other regulatory requirements for HEC carriage must still be met after an approved modification of the QRS to achieve the reliability necessary for HEC carriage. In the preceding examples, a replacement PQRS such as an additional set of cable cutters would need to be added to provide a complete QRS (i.e., both the PQRS and the BQRS must be present). In all cases, an HEC reliability demonstration in accordance with d(8)(ii) should be conducted and approved. Operational acceptability of these special case configurations also needs to be demonstrated.

(iv) Other load release types. In some current configurations, such as those used for high line operations, a load release may be present that is not on the rotorcraft but is on the PCDS itself. Examples are a tension release device that lets out line under an operationally induced load or a personal rope cutter. These devices are acceptable if:

(A) The off-rotorcraft release is considered a "third release"; i.e., an approved QRS (i.e., PQRS and BQRS) is present on the rotorcraft;

(B) The release meets other relevant requirements of § 29.865 and the methods of this AC or equivalent methods; and

(C) The release has no operational or failure modes that would affect continued safe flight and landing under any operations, critical failure modes, conditions, or combination of either.

(9) Compliance Procedures for Electromagnetic Interference under § 29.865(b)(3)(ii): Protection of any critical portions of the QRS against potential internal and external sources of electromagnetic interference (EMI) and lightning is required. This is necessary to prevent inadvertent load release from sources such as lightning strikes, stray electromagnetic signals, and static electricity.

NOTE 1: For "on-the-shelf" QRS system components (that may be used on different rotorcraft and in different installation configurations in the same rotorcraft) a one-time bench test, if FAA approved, can be used to test the EMI capability of the component itself. However, the EMI effect of each individual installation must be taken into account on a case-by-case basis when certifying the component's installation. This is especially critical for HEC applications.

(i) Jettisonable NHEC systems - should be able to absorb a minimum of 20 volts per meter (i.e., CAT U) RF field strength per RTCA/DO-160.

(ii) Jettisonable HEC systems[1] - should be able to absorb a minimum of 200 volts per meter (i.e., CAT Y) RF field strength per RTCA/DO-160.

d(9) (continued)

NOTE 1: These RF field threat levels may have to be increased for certain special applications such as microwave tower and high voltage high line repairs. Separate criteria for special applications under multi-agency regulation (such as IEEE/OSHA standards) should also be addressed, as applicable, during certification. When necessary, an issue paper can be used to establish a practicable level of safety for specific high voltage or other special application conditions. For any devices or means added to meet multi-agency regulations, their failure modes should not have an adverse effect on flight safety. Other certification authorities may require higher RF field threat levels than those required by § 29.865 (e.g., the European Joint Aviation Authorities Interim HIRF policy).

NOTE 2: An approved, standard rotorcraft test that includes the full HIRF frequency/amplitude external and internal environments on the QRS and PCDS (or the entire rotorcraft including the QRS and PCDS) could be substituted for the jettisonable NHEC and HEC systems tests defined by d(9)(i) and d(9)(ii), respectively, as long as the RF field strengths directly on the QRS and PCDS are shown to equal or exceed those of d(9)(i) and d(9)(ii).

NOTE 3: The EMI levels specified in d(9)(i) and d(9)(ii) are total EMI levels to be applied to the QRS (and/or effected QRS component) boundary. The total EMI level applied should include the effects of both external EMI sources and internal EMI sources. All aspects of internally generated EMI should be carefully considered including peaks that could occur from time-to-time due to any combination of on-board systems being operated. For example, special attention should be given to EMI from winch operations that involve the switching of very high currents. Those currents can generate significant voltages in closely spaced wiring that, if allowed to reach some squib designs, could activate the device. Shielding, bonding and grounding of wiring associated with operation of the winch and the quick-release mechanism should be clearly and adequately evaluated in design and certification. This evaluation may require testing. One acceptable test method to demonstrate adequacy of QRS shielding, bonding and grounding, would be to actuate the winch under maximum load together with likely critical combinations of other aircraft electrical loads and demonstrate that the test squibs (that are more EMI sensitive than the squibs specified for use in the QRS) do not inadvertently operate during the test.

(10) General Compliance Procedures for HEC Applications under § 29.865(c): For HEC applications, the safety requirements for HEC carriage for all applicable RLC's are addressed. This ensures that HEC certification requirements are clearly and properly identified.

(11) General Compliance Procedures for Jettisonable HEC Operations under § 29.865(c)(1): For jettisonable HEC operations, it may be required by Operations Requirements, that the rotorcraft meet the Category A engine isolation requirements of

d(11) (continued)

Part 29 and that the rotorcraft have OEI OGE hover performance capability in its approved, jettisonable HEC weight, altitude, and temperature envelope. OEI vertical climb capability may be needed in some operational circumstances for flight safety. Such instances should be identified and the necessary OEI vertical climb capability assessed and verified during the certification process.

(12) Compliance Procedures for QRS's under § 29.865(c)(1): For jettisonable HEC operations, both the PQRS and BQRS are required to have a DAD (i.e., see definitions, they are required to have a sequential control with two distinct actions) for external cargo release. Two distinct actions are required to provide a higher level of safety to minimize inadvertent jettison of HEC. The DAD is intended for emergency use only during the phases of flight that the HEC is carried (and/or retrieved) externally. The DAD can be used for both NHEC and HEC operations. However, because it can be used for HEC, its continued airworthiness should be carefully reviewed and documented in accordance with prescribed (or mandated) instructions. The DAD (i.e., either the primary or backup release) can be operated by the pilot from a primary control or, after a command is given by the pilot, by a crewmember from a remote location. If the backup DAD is a cable cutter, it should be properly secured but readily accessible to the crewmember intended to use it.

NOTE 1: OEI power settings should not be used for certification credit for normal operations. However, they are available for the OEI emergency scenarios for which approval has been granted whether or not a NHEC or HEC is involved. For determination of the maximum rotorcraft gross weight approved for Class D operations (i.e., HEC operations performed with a multiengine rotorcraft capable of OEI HOGE), it is intended that use of the maximum OEI Power approved for the rotorcraft engine and drive system be allowed after failure of the critical engine (when applied in conjunction with an approved Class D operating procedure). Thus, it would be acceptable to base the required OEI/OGE hover performance capability for a Class D operation on a 30-second OEI power rating if the operator can demonstrate that the HEC can be safely transitioned to a flight condition where the HEC can be retrieved inside the rotorcraft for an execution of a normal OEI landing. If the specific operation for which the Class operation approval is requested does not provide for safe disposition of the HEC when using a time limited OEI rating, the Class D operation gross weight should be limited to a gross weight where OEI/OGE hover capability can be demonstrated for a continuous time period.

(13) Compliance Procedures for PCDS's under § 29.865(c)(2): For all HEC applications, an approved PCDS is required. The PCDS is either required to be previously approved or is required to be approved during certification (reference d(14) for information on current designs). In either case, its installation should be approved. PCDS designs can vary from simple single occupant donut "lifesaver" devices to relatively complex multiple occupant cages or gondolas. However, the basic occupant

d(13) (continued)

hazard design philosophy is the same. It is to provide injured (conscious or possibly unconscious) occupants or uninjured occupants the level-of-safety necessary to minimize the possibility of any further or new injuries under any flight conditions that could occur while they are carried external to the rotorcraft.

(i) Static strength. The PCDS should be substantiated for the allowable ultimate load and loading conditions as determined under paragraphs d(2) through d(5) above.

(ii) Fatigue. The PCDS is required to be substantiated for fatigue in accordance with § 29.865(f) (Reference d(21)).

(iii) Personnel safety. For each PCDS design, a documented design evaluation should be submitted by the applicant (and presented to the Certification Authority) that ensures that the necessary level of personnel safety is provided (i.e., all potential, relevant occupant hazards are acceptably minimized). As a minimum, the following should be evaluated.

NOTE: It is intended that the evaluation should be comprehensive. However, it is not necessarily intended that the PCDS be required to have all the personnel safety design features of, for example, a transport aircraft interior. Only those personnel safety design features necessary to minimize new or further injury to PCDS occupants during the relatively short time interval the PCDS is utilized on a given mission are necessary.

(A) The PCDS should be easily and readily ingressed or egressed.

(B) It should be placarded for proper capacity, internal arrangement/location of occupants, and ingress and egress instructions (See also, d(2)(vi)).

(C) For door latch fail-safety, more than one fastener or closure device is recommended. The latch device design should provide direct visual inspectability to ensure it is fastened and secured.

(D) Any fabric used should be durable and should be at least flame-resistant.

(E) Safety harnesses and belts should meet TSO C-22 and TSO-C-114 requirements.

(F) Sharp corners and edges should be avoided and padding should be used, as necessary, to protect the occupants.

d(13) (continued)

NOTE: Acceptable sources of detailed design criteria and standards for PCDS webbing and harness can be found in sources such as U.S. AAVSCOM TR 89-D-22D, "Aircraft Crash Survival Design Guide, Volume IV - Aircraft Seats, Restraints, Litters, and Cockpit/Cabin Delethalization."

(G) Occupant retention devices and related design safety features should be used as necessary. In simple designs, only a lack of sharp corners and edges with adequate strapping (or other means of HEC retention relative to the PCDS) and head supports/pads may be all the safety features that are necessary. However, in more complex PCDS designs, safety features such as seat belts, hand holds, shoulder harnesses, placards, and/or other personnel safety standards may be required.

(H) The PCDS design should use methods of compliance in other relevant paragraphs of this AC or equivalent methods.

(iv) Reliability. The reliability level goal for the PCDS and its attachments to the rotorcraft is extremely improbable (i.e., 1×10^{-9} failures per flight) for all failure modes that could cause either catastrophic failure, serious injuries, and/or fatalities anywhere in the total airborne system. All significant failure modes of lesser consequence should be rendered improbable (i.e., 1×10^{-5} failures per flight). One acceptable method of achieving this goal is to submit and achieve approval of the following:

(A) A PCDS level FMEA that minimizes any potential catastrophic failures that are not extremely improbable and minimizes any other lesser, significant failures that are not improbable.

(B) A repetitive test of all functional devices that cycles these devices under critical structural conditions, operational conditions, or a combination at least 30 times.

(C) An environmental qualification review over the proposed operating environment.

NOTE: A complete environmental qualification test as described in d(3)(iii)(C) is necessary unless the design features would clearly not necessitate employment of all or part of the test program of d(3)(iii)(C).

(v) EMI and lightning protection. All essential, affected components of the PCDS, such as intercommunication equipment, should be protected against RF field strengths to a minimum of RTCA/DO-160 CAT Y. (Reference d(9)(ii).)

d(13) (continued)

(vi) Continued airworthiness. All instructions and documents necessary for continued airworthiness, normal operations, and emergency operations should be completed, reviewed, and approved during the certification process.

(vii) Flotation devices. PCDS's that are intended to have a dual role as floatation devices or life preservers should meet the requirements of TSO-C13f, "Life Preservers." Also, any PCDS design to be used in the water should have a floatation kit. The kit should support the weight of the maximum number of occupants and the PCDS in the water and minimize the possibility of the occupants floating face down.

(viii) Aerodynamic considerations. Litters and other types of PCDS designs may (because of effects from sources such as down drafts, maneuvers, or gusts) spin, twist or otherwise respond unacceptably in flight. These designs should be structurally restrained with devices such as a spider, a harness, or an equivalent device to minimize undesirable flight dynamics.

(ix) Medical design considerations. The PCDS should be designed to the maximum practicable extent and placarded to maximize the HEC's protection from medical considerations such as blocked air passages induced by improper body configuration and excessive loss of body heat during operations. HEC (especially injured and/or water soaked persons) may be exposed to high body heat loss from sources such as rotor wash and the airstream. PCDS occupant safety from transit induced medical considerations can be greatly increased by proper design.

(x) Special PCDS configurations. Certain PCDS configurations may be submitted for approval that have special design considerations. Known configurations and their special design considerations are described, as follows:

Net type PCDS's. A well-designed net type PCDS has the advantage of being able to quickly evacuate several combinations of able and/or disabled HEC. Net type PCDS's should be designed such that enough rigid or semi-rigid components are present so that the net does not close in and entrap, injure, further injure, and/or create panic from claustrophobia to the HEC occupants during rescue. Secondly, if intended for water use, the net type PCDS should have proper flotation so it does not drag the HEC underwater. Thirdly, the net type PCDS should be easily ingressed so that the HEC will readily climb into the net and not try to hang onto the outside of the net.

(14) Summary of Current PCDS Designs that relate to § 29.865(c)(3): In relation to § 29.865(c)(3), several commercial and military PCDS's exist and are used for emergency rescue work involving HEC. Known devices are summarized in figure AC 29 MG 12-3. Some devices are not approved; however, applications that involve them may be submitted for approval.

(15) Compliance Procedures for QRS Design, Installation, and Placarding under § 29.865(c)(3): For jettisonable HEC applications, the QRS design, installation, and associated placarding should be given special consideration to ensure the proper level of occupant safety.

(16) Compliance Procedures for Intercom Systems for HEC Operations under § 29.865(c)(4): For all HEC operations, the rotorcraft is required to be equipped for or otherwise allow direct intercommunication under any operational conditions among crewmembers and the HEC. It is intended that for simple systems, voice or hand signals to PCDS occupants (if not in conflict with operations requirements) would be acceptable. In more complex systems, it is intended that more sophisticated devices such as intercoms be provided.

(17) Compliance Procedures for Flight Manual Procedures and Limitations for HEC Operations under § 29.865(c)(5) and (c)(6): All appropriate flight manual procedures and limitations for all HEC operations are required to be present and to be approved. These instructions and manuals should be proofed during flight tests (reference d(19)).

(18) Compliance Procedures for Special Conditions Encountered in Operations: If special conditions will be encountered in operations such as low visibility and night use, then provisions such as night lighting that provide the proper level of safety for both the rotorcraft and HEC when operating under these special conditions should be identified, considered, and approved during certification. This determination should be made on a case-by-case basis during either initial or supplemental certification using the proposed operating environment scenario.

(19) Compliance Procedures for Flight Test Verification Work under § 29.865(d): Flight test verification work (or an equivalent combination of analysis and ground testing, either in conjunction with or in addition to operations rules such as Part 133 for the U.S.) that thoroughly examines the operational envelope should be conducted with the external cargo carriage device for which approval is requested (especially those that involve HEC). The flight test program should show that all aspects of the operations applied for are safe, uncomplicated, and can be conducted by a qualified flight crew under the most critical service environment and, in the case of HEC, under emergency pressure. Flight tests should be conducted for the simulated representative NHEC and HEC loads to demonstrate their in-flight handling and separation characteristics.

(i) General. Flight testing (or an equivalent combination of analysis and testing) should be conducted under the critical combinations of configurations and operating conditions for which basic type certification approval is sought. Additional combinations of external load and operating conditions may be subsequently approved under relevant operational requirements as long as the structural limits and reliability

d(19) (continued)

considerations of the basic certification approval are not exceeded (i.e., equivalent safety is maintained). The qualification flight test work of this subparagraph is intended to be accomplished primarily by analysis and/or bench testing. However, at least one in-flight, limit load drop test should be conducted for the critical load case. If one critical load case cannot be clearly identified, then more than one drop test might be necessary. Also, in-flight tests for the minimum load case (i.e., typically the cable hook itself) with the load trailing both in the minimum and maximum cable length configurations should be conducted. Any safety-of-flight limitations should be documented and placed in the rotorcraft flight manual. Also, in certain low-gross weight, jettisonable HEC configurations, the PCDS may act as a trailing airfoil (i.e., exhibit lift characteristics above certain airspeeds) that could result in entangling the PCDS and the rotorcraft. These configurations should be assessed on a case-by-case basis by analysis and/or flight test to assure any safety-of-flight limitations are clearly identified and placed in the rotorcraft flight manual.

(ii) Determination of one engine inoperative (OEI) hover performance. FAR 29.865(c)(6) and 133.45(e)(1) require the rotorcraft to be type certificated under Transport Category A for the operating weight and provide hover capability with one engine inoperative at that operating weight, altitude, and temperature. It is intended that the rotorcraft be able to withstand an engine failure during hover and continue the hover operation.

(A) In determining OEI hover performance, dynamic engine failures should be considered. Each hover verification test should begin from a stabilized hover at the maximum OEI hover weight, at the requested in-ground effect (IGE) or out-of-ground-effect (OGE) skid/wheel height, and with all engines operating. At this point, the critical engine should be failed and the aircraft should demonstrate the capability to maintain a stabilized hover condition without exceeding any rotor limits or engine limits for the operating engine(s). As with all performance testing, engine power should be limited to minimum specification power. Engine failures may be simulated by rapidly moving the throttle to idle provided a needle split is obtained between the rotor and the engine RPM.

(B) Normal pilot reaction should be used following the engine failure to maintain the stabilized hover flight condition. When hovering OGE or IGE at maximum OEI hover weight, an engine failure should not result in an altitude loss of more than 10 percent or 4 feet, whichever is greater, of the altitude established at the time of engine failure. In either case, sufficient power margin should be available from the operating engine(s) to regain the altitude lost during the dynamic engine failure and to transition to forward flight.

(C) The time required to recover an external load (especially HEC loads) and to transition to forward flight should also be considered. This time increment may limit the use of short duration, OEI power ratings. For example, for a helicopter that

d(19) (continued)

sustains an engine failure at a height of 40 feet, the time required to restabilize in a hover, recover the external load (given hoist speed limitations), and then transition to forward flight (with minimal altitude loss) would likely preclude the use of a 30-second engine ratings and may encroach upon 2 1/2-minute ratings.

(D) In addition, for those helicopters that incorporate engine driven generators, the hoist should remain operational following an engine/generator failure. A hoist should not be powered from a bus that is automatically shed following the loss of an engine/generator. Maximum two engine generator loads should be established such that when one engine/generator fails, the remaining generator can assume the entire rotorcraft electrical load (including maximum hoist electrical load) without exceeding approved limitations.

(E) The Rotorcraft Flight Manual (RFM) should contain information that describes the expected altitude loss, any special recovery techniques, and the time increment needed for recovery of the external load when establishing maximum weights and skid heights. The OEI hover chart may be placed in the performance section of the RFM or RFM supplement. Allowable altitude extrapolation for the hover data should not exceed 2,000 feet.

(iii) Separation characteristics of jettisonable external loads. For any RLC for any applicable cargo type, satisfactory post-jettison separation characteristics of all loads should meet the minimum criteria that follow:

(A) Immediate "clean" operation of the QRS, including "clean" separate functioning of the PQRS and BQRS.

(B) No damage to the helicopter during or following actuation of the QRS and load jettisoning.

(C) A jettison trajectory clear of the helicopter.

(D) No inherent instability of the jettisonable (or just jettisoned) HEC and/or NHEC while in proximity to the helicopter.

(E) No adverse or uncontrollable helicopter reactions at the time of jettison.

(F) Stability and control characteristics after jettison should be within the originally certified limits.

FIGURE AC 29 MG 12-3

DEVICE	FAA APPROVED[2]	SOURCE
Stokes litter (one Person)	No	U.S. Coast Guard
Rescue Basket	No	U.S. Coast Guard
Rescue Sling (one Person)[1]	Yes	U.S. Coast Guard
Rescue Net (STC7586SW)[2]	Yes	Billy Pugh Co., Inc. P.O. Box 802 1415 N. Water Street Corpus Christi, TX 78403
LII (STC7731SW)[2]	Yes	Life Industries International, Inc. 4170 Rogers Avenue Suite D, Box 3284 Fort Smith, AR

NOTES:

1. The "rescue sling" or "rescue strop" is a "horse collar" device that requires a person to exert some effort to remain in the collar. Some versions of the rescue sling have retainer straps to help secure an occupant in the horse collar. These straps are typically located in pockets on each side of the collar and are usually marked "pull." The straps go around the occupant's back and clip together with a "V" ring and a quick ejector fitting. This device should only be used on a fully conscious individual, unless the individual is fully retained by devices such as retention straps. Even an alert, well-trained individual may have nerves impinged on by pressure from this device. Nerve impingement may result in loss of sensation in the arms, loss of grip, and inadvertent fall from the harness. The retainer strap version of the rescue sling should only be used in conjunction with properly written instructions and placards and with trained personnel.

2. FAA approval is for a specific installation only; each new installation is required to still be approved.

3. Other types of emergency rescue devices that are not listed but have been successfully used by the military are the Screamer Suit and the Jungle Penetrator. The screamer suit or harness (full body fishnet) is a PCDS constructed of mesh and webbing. It was originally designed to physically encompass the torso of HEC rescue subjects who are disabled or unconscious to prevent them from inadvertently falling out of the PCDS. It is a relatively simple device for a rescuer to use. The Jungle Penetrator is a heavy device (typically metal) with a tapered end. It will break light timber and brush when dropped in free-fall from the rotorcraft to an evacuee. It typically has arms that swing down on which HEC can ride and a webbing loop to hold the HEC onto the device.

d(19) (continued)

(G) No unacceptable degradation of the helicopter performance characteristics after jettison.

(iv) Jettison requirements for jettisonable external loads. For representative cargo types (low, medium, and high density loads on long and short lines), emergency and normal jettison procedures should be demonstrated (by a combination of analysis, ground tests, and flight tests) at sufficient combinations of flight conditions to establish a jettison envelope which should be placed in the flight manual.

(v) QRS demonstration. Repetitive jettison demonstrations should be conducted that use the PQRS. Except, the BQRS should be utilized at least once.

(vi) QRS reliability (i.e., failure modes) affecting flight performance. The FMEA of the QRS (reference d(7) and d(8)) should show that any single system failure will not result in unsatisfactory flight characteristics. For any QRS failures resulting in asymmetric loading conditions, the helicopter should be shown to be safely flyable. Performance characteristics should not be adversely affected by any QRS failure mode.

(vii) Flight test weight and CG locations. All flight tests should be conducted at the extreme or critical combinations of weight and longitudinal and lateral CG conditions within the applied for flight envelope. The rotorcraft should remain within approved weight and CG limits both with the external load applied and after jettison of the load.

(viii) Flight Speed Envelopes. Emergency and normal jettison demonstrations should be performed at sufficient airspeeds to establish any airspeed restrictions for satisfactory separation characteristics. The maximum and minimum airspeed limits for safe separation should be determined. The sideslip envelope as a function of airspeed should be determined.

(ix) Altitude. Emergency and normal jettison demonstrations should be performed at altitudes consistent with the approvable operational envelope and with the maneuvering requirements necessary to overcome any adverse effects of the jettison.

(x) Attitude. Emergency and normal jettison demonstrations should be performed from all attitudes appropriate to normal and emergency operational usage. Where the attitudes of HEC and/or NHEC with respect to the helicopter may be varied, the most critical attitude should be demonstrated. This demonstration would normally be accomplished by bench testing.

d(19) (continued)

(xi) Winch/hoist/rescue hook systems and/or cargo hook systems. These articles should be flight demonstrated per d(3)(x).

(20) Compliance Procedures for External Loads Placards and Markings under § 29.865(e): Placards and markings should be installed next to the external load attaching means, in a clearly noticeable location, that state the primary operational limitations - specifically including the maximum authorized external load. Not all operational limitations need be stated on the placard (or equivalent markings) only those clearly necessary for immediate reference in operations. Other more detailed and/or operational limitations of lesser immediate reference need should be stated either directly in the RFM or in a supplement thereto (See also, d(2)(vi)).

(21) Compliance Procedures for Fatigue Substantiation under § 29.865(f): The fatigue evaluation of § 29.571 should be applied as follows:

NOTE: The term "hazard to the rotorcraft" is defined to include all hazards to either the rotorcraft, to the occupants thereof, or both.

(i) Fatigue evaluation of NHEC applications. Any critical components of the suspended system and their attachments (such as the cargo hook or bolted or pinned truss attachments), the failure of which could result in a hazard to the rotorcraft, should include an acceptable fatigue analysis in accordance with AC 20-95, Section 9.

(ii) Fatigue evaluation of HEC applications. The entire PCDS and its attachments should be reviewed on a component-by-component basis to determine which, if any, components are fatigue critical or damage intolerant. These components should be analyzed and/or tested (per AC 20-95 or other equivalent methods) to ensure their fatigue life limits are properly determined and placed in the limited life section of the maintenance manual.

(22) Compliance Procedures for Agricultural Installations (AI's): AI's can be certified for either jettisonable or non-jettisonable NHEC or HEC operations as long as they meet relevant certification and operations requirements and follow appropriate compliance methods. However, most current AI designs are external fixtures (see definition) - not external loads. External fixtures are not certifiable as jettisonable external cargo because they do not have a true payload (see definition), true jettison capability (see definition), or a complete QRS. Many AI designs can dump their solid or liquid chemical loads by use of a "purge port" release over a relatively long time period (i.e., greater than 30 seconds). This is not considered true jettison capability (see definition) since the external load is not released by a QRS and since the release time span is typically greater than 30 seconds (reference c(20) and d(7)). Thus, these types

d(22) (continued)

of AI's should be certified as a non-jettisonable external load. However, other designs that have the entire AI (or significant portions thereof) attached to the rotorcraft, that have short time frame jettison (or release) capability provided by a QRS that meets the definitions herein and that have no post-jettison characteristics that would endanger continued safe flight and landing may be certified as a jettisonable external load. For example, if all the relevant criteria are properly met, a jettisonable fluid load can be certified as a NHEC external cargo. AC 29 MG 5 discusses other AI certification methodology.

(23) Compliance Procedures for External Tank Configurations: External tank configurations that have true payload (see definition) and true jettison capability (see definition) should be certified as jettisonable NHEC. External tank configurations that have a true payload capability but do not have true jettison capability should be certified as non-jettisonable NHEC. An external tank that has neither a true payload capability nor true jettison capability is an external fixture; it should not be certified under § 29.865 (i.e., as an external load). If an external tank is to be jettisoned in flight, it should have a QRS that is approved for the maximum jettisonable external tank payload and is either inoperable or is otherwise rendered reliable to minimize inadvertent jettisons above the maximum jettisonable external tank payload.

(24) Compliance Procedures for Logging Operations: These operations are very susceptible to low-cycle fatigue because of the large loads and relatively high load cycles that are common to this industry. It is recommended that load measuring devices (such as load cells) be used to ensure that no unrecorded overloads occur and to ensure that cycles producing high fatigue damage are properly considered. Cycle counters are recommended to ensure acceptable cumulative fatigue damage levels are identifiable and are not exceeded. As either a supplementary method or alternate method, maintenance instructions should be considered to ensure proper cycle counting and load recording during operations.

(25) Compliance Procedures for Noise Certification: FAR 36 is the noise certification standard. Section 36.1(a)(4) specifically exempts helicopters that are designed exclusively for agricultural work, carrying firefighting materials, or external loads activity from the noise standards. FAR 21.93(b)(4) also contains specific information regarding external loads and what configurations constitute/do not constitute an acoustical change.

(26) Compliance Procedures for Inspection and Maintenance Considerations. Maintenance manuals (and supplements thereto) developed by applicants for external load applications should be presented for approval and should include all appropriate inspection and maintenance procedures. The applicant should provide sufficient data and other information to establish the frequency, extent, and methods of inspection of critical structure, systems and components thereof. This information must be included

d(26) (continued)

in the maintenance manual as required by § 29.1529. For example, maintenance requirements for sensitive QRS squibs should be carefully determined, documented, approved during certification, and included as specific mandatory scheduled maintenance requirements that may require either "daily" or "pre-flight" checks (especially for HEC applications).

FIGURE AC 29. MG 12-4: SUMMARY OF RELEVANT INFORMATION FOR U.S. PART 133 ROTORCRAFT LOAD COMBINATIONS CERTIFIABLE UNDER § 29.865

Basic Definition and Intended Use Class A	Typical Load Limits	Quick Release Requirements	Certification Requirements and Considerations
Fixed External Cargo Container - Is defined by § 1.1 as a load combination in which the external load cannot move freely, cannot be jettisoned, and does not extend below the landing gear. This category usually features multiple attachments (loadpaths) to the airframe. A typical example is a hard mounted cargo basket attached to the rotorcraft crosstubes which is used to carry external cargo from point A to point B. A non-typical example is a removable advertising sign that is in a folded configuration during take-off and landing, but is extended during flight. Maximum rotorcraft gross weight with external load may not exceed the maximum internal load gross weight approved under § 29.25(a).	Certification limit load is N_{ZW} X Maximum Substantiable External Load. N_{ZW} is 2.5 per § 29.865 (See Procedure, paragraph d(2)(ii)) for NHEC cargo. For HEC, $2.5 \leq N_{ZW} \leq 3.5$ depending on gross weight (see Procedure paragraph d(2)(iii)).	None. Cargo and its container are not jettisonable.	• For HEC and NHEC external cargo. (See figure AC 29 MG 12-1) • Flight Manual Restrictions - § 133.47 requires a rotorcraft load combination flight manual supplement. Any flight envelope restrictions and emergency procedures from § 29.865 should be a part of this supplement. • The rotorcraft does not need Category A and OEI hover capability to carry HEC. • Load limit placards are required by § 29.865(c). • Flight envelope restriction placards may also be required for gross weight limitations, elimination of dangerous maneuvers, HEC requirements, etc. • Cargo tiedowns to prevent load shifting relative to airframe and for inflight load retention may be required. • Effect of external cargo carrier and its maximum cargo weight on load paths, loads and fatigue of existing structure should be determined. • Type Inspection Authorization (TIA) testing may be necessary to determine whether or not the system performs as intended and if placards and flight manual supplements are adequate. • The applicant should test the aerodynamic effect of several representative load shapes and include applicable information in the flight manual supplement. If such information is not in the RFM, then the operator may be required to obtain an operations approval under Part 133. • PCDS (i.e., the entire attached HEC carrying device) should be reviewed for relevant occupant safety criteria and placarding. • If all relevant criteria are met, non-jettisonable external tank loads (i.e., fluid or other loads) can be certified as a Class A RLC [Reference d(22) and d(23)]. • To be certified under § 29.865 as a Class A RLC, the external load and its carrying device should have true payload capability (see definition) (i.e., it should be an external load, not an external fixture).

FIGURE AC 29 MG 12-4: SUMMARY OF RELEVANT INFORMATION FOR U.S. PART 133 ROTORCRAFT LOAD COMBINATIONS CERTIFIABLE UNDER § 29.865 (continued)

Basic Definition and Intended Use	Typical Load Limits	Quick Release Requirements	Certification Requirements and Considerations
Class B			
Single or Multiple Point Suspension External Load Airborne Is defined by § 1.1 as a load combination in which the external load is jettisonable and is lifted free of land or water during the rotorcraft operation. The payload is typically suspended from a hook or a similar device. The hook may be attached to the rotorcraft structure, or it may be attached to a movable hoist cable with the hoist itself attached to the rotorcraft. A typical use is to lift a cargo load until it is completely airborne and fly it from point A to point B. The external hoist load may be stowed in the fuselage (in some cases) while being transported. The rotorcraft maximum gross weight with external load attached may exceed the maximum internal gross weight approved under § 29.25(a) as long as all weight above the maximum internal weight is jettisonable.	Certification limit load is N_{ZW} X Maximum Substantiatable External load. N_{ZW} is 2.5 per § 29.865 (See Procedure, paragraph d(2)(ii) for NHEC). Load may be limited by winch/hoist allowables. For HEC, $2.5 \leq N_{ZW} \leq 3.5$ depending on gross weight (see Procedure paragraph d(2)(iii)).	Yes - § 29.865(b)(1) requires that a primary quick release subsystem control device be installed on a primary control or in an equivalently accessible location. Also, a backup quick release system actuation device should be available and readily accessible.	• For HEC or NHEC external cargo (See figure AC 29 MG 12-1). • Flight Manual Restrictions - § 133.47 requires a rotorcraft load combination flight manual supplement. Any flight envelope restrictions and emergency procedures from § 29.865 should be a part of this supplement. • The rotorcraft does not need Category A and OEI hover capability to carry HEC. • Load limit placards are required by § 29.865(c). • Flight envelope restriction placards may also be required for HEC. • Certifiable external cargo load capacity may be further limited by §§ 133.41 and 133.43. • Quick release subsystems and devices should be approved and be operable on a nonhazard basis by the pilot per § 29.865(b). • Quick release backup subsystems should be reliable but need not be overly sophisticated (cable cutters, axes, etc., used by crewmembers). • Effect of maximum suspended load and its attachment to rotorcraft structure on load paths, loads and fatigue of existing structure should be determined. • TIA testing may be necessary to determine whether or not the system performs as intended and if placards and flight manual supplements are adequate. • PCDS (i.e., the entire attached human external cargo carrying device) should be reviewed for relevant occupant safety criteria and placarding. • If all relevant criteria are met, jettisonable loads (i.e., fluid or other loads) can be certified as a Class B RLC [reference d(22) and d(23)].

FIGURE AC 29 MG 12-4: SUMMARY OF RELEVANT INFORMATION FOR U.S. PART 133 ROTORCRAFT LOAD COMBINATIONS CERTIFIABLE UNDER § 29.865 (continued)

Basic Definition and Intended Use	Typical Load Limits	Quick Release Requirements	Certification Requirements and Considerations
Class C			
Single or Multiple Point Suspension External Load Partially Airborne - Is defined by § 1.1 as an RLC in which the external load is jettisonable and remains in contact with land or water during the rotorcraft operation. The payload is typically partially suspended by a net or cables from a cargo hook or a similar device. The cargo hook may be attached to the rotorcraft structure or may be attached to a movable hoist cable and the hoist itself attached to the rotorcraft. A typical use is for stringing wire or laying cable where the payload is only partially suspended from the ground. (Note: Many applications combine both Category B and C operations because of the obvious utility involved.) The rotorcraft maximum gross weight with external load attached may exceed the maximum internal gross weight approved under § 29.25(a) as long as all weight above the maximum internal weight is jettisonable.	Certification limit load is N_{ZW} X Maximum Substantiable External load. N_{ZW} is 2.5 per § 29.865 (See Procedure, paragraph d(2)(ii) for NHEC). Load may be limited by hoist allowables. For HEC, $2.5 \leq N_{ZW} \leq 3.5$ depending on gross weight (see Procedure paragraph d(2)(iii)).	Yes - § 29.865(b)(1) requires that a primary quick release subsystem control device be installed on a primary control or in an equivalently accessible location. Also, a backup quick release subsystem control device should be available and readily accessible.	• For HEC or NHEC external cargo (See figure AC 29 MG 12-1). • Flight Manual Restrictions - § 133.47 requires a rotorcraft load combination flight manual supplement. Any flight envelope restrictions and emergency procedures from § 29.865 should be a part of this supplement. • The rotorcraft does not need Category A and OEI hover capability to carry HEC. • Load limit placards are required by § 29.865(c). • Flight envelope restriction placards may also be required for HEC. • Certifiable external cargo load capacity may be further limited by §§ 133.41 and 133.43. • Quick release subsystems and devices should be approved and be operable on a nonhazard basis by the pilot per § 29.865(b). • Quick release backup subsystems should be reliable, but need not be overly sophisticated (cable cutters, axes, etc., used by a crewmember). • Effect of the maximum suspended/attached load and its attachment to rotorcraft structure on load paths, loads and fatigue of existing structure should be determined. • TIA testing may be necessary to determine whether or not the system performs as intended and if placards and flight manual supplements are adequate. • PCDS (i.e., the entire attached HEC carrying device) should be reviewed for relevant occupant safety criteria and placarding.

FIGURE AC 29 MG 12-4: SUMMARY OF RELEVANT INFORMATION FOR U.S. PART 133 ROTORCRAFT LOAD COMBINATIONS CERTIFIABLE UNDER § 29.865 (continued)

Basic Definition and Intended Use	Typical Load Limits	Quick Release Requirements	Certification Requirements and Considerations
Class D Single or Multiple Point Suspension External Airborne Load. Is defined by § 1.1 as an RLC in which one or more persons who are passengers OTHER than crewmembers and/or persons who are essential to the external load operation are carried as an external load for compensation. Such passengers carried external to the rotorcraft in approved devices that meet the configuration definition of any other rotorcraft-load combination are defined as a Class D rotorcraft-load combination. This RLC is for HEC transport. The payload which typically consists of personnel and their PCDS can be configured in any safe manner. PCDS's may transport one or more persons. Typical PCDS's devices are vest and straps, baskets, life preservers with straps and attachment devices, cages, or a suspended container. (See Procedures d(13) and d(14). The maximum gross weight with external load attached should not exceed the OEI OGE Hover Performance capability for the operational ambient conditions (altitude and temperature).	For HEC, N_{ZW} varies from 2.5 at max gross weight to 3.5 at minimum gross weight. (See Procedures d(2)(iii)). Load is usually limited by hoist allowable, attachment allowable or by PCDS allowable.	A PQRS control DAD (requiring two distinct actions) should be installed on a primary control or be in an equivalently accessible location such as near a designated primary crewmember's station. Also, a BQRS DAD should be available and readily accessible.	• Used only for HEC other than Class A, B, or C. Only an HEC load that consists of a person other than a crewmember or a person who is essential and directly connected with the external load operation may be carried as an approved Class D RLC. These persons are being carried (i.e., transported) externally (See figure AC 29 MG 12-1). • This RLC combination cannot be used for NHEC (See figure AC 29 MG 12-1). • Rotorcraft should meet the Category A engine isolation requirements of Part 29 and should be certified for an OEI/OGE hover performance weight, altitude and temperature envelope that becomes the maximum envelope that can be used for Class D HEC operations. This is required for a Class D rating by § 133.45(e)(1). • PCDS's should be approved separately or as part of the certification project. • PCDS's should carry personnel internally or secure them safely in a harness or equivalent device. • Flight Manual Restrictions - § 133.47 requires a rotorcraft load combination flight manual supplement. Any flight envelope restrictions and emergency procedures from § 29.865 should be a part of this supplement. • Load limit placards are required by §29.865(c). • Flight envelope restriction placards may also be required. • Certifiable external load capacity is further limited by §§ 133.41, 133.43 and 133.45(e)(3), the load limit of the PCDS and its attachment to the rotorcraft. • QRS subsystem release devices should be approved and be operable on a nonhazard basis by the pilot or a designated primary crewmember per §§ 133.44(c)(6) and 29.865(b). • The PQRS should have an emergency release (DAD) requiring two distinct actions. • The BQRS subsystem should be accessible and reliable. • Rotorcraft should be equipped to allow direct intercom among all crewmembers (per § 133.45(e)(2)). • Effect of maximum external load and its attachment to rotorcraft structure on load paths, loads and fatigue (Re. AC 20-95) of existing structure should be determined. • TIA testing may be necessary to determine whether or not the system performs as intended and if placards and flight manual supplements are adequate.

AC 29 APPENDIX A. INSTRUCTIONS FOR CONTINUED AIRWORTHINESS

reserved

AC 29 APPENDIX B. AIRWORTHINESS GUIDANCE FOR ROTORCRAFT INSTRUMENT FLIGHT

a. Explanation. Requirements for instrument flight rules (IFR) have been incorporated into Part 29, Appendix B, utilizing a regulatory format. Various information from previous interim standards, procedures, test techniques, and acceptable means of compliance for rotorcraft IFR flight are included in the following sections.

b. Procedures.

(1) General.

(i) The certified instrument flight envelope may be more restrictive than the visual flight rules (VFR) envelope in terms of weight, center of gravity, speed, altitude, or rate of climb and descent. The approved envelope should be operationally practical such that it does not impose constraints with which the crew has difficulty complying.

(ii) Controllability requirements are to be met from 0.9 V_{MINI} to 1.1 V_{NE}. Stability requirements must be met where specified. Stability devices are to be designed to allow safe flight following a failure. The evaluating pilot should assure that all equipment and devices installed for IFR, including reasonable failures of that equipment, do not compromise the VFR approval for that rotorcraft. An example of this would be a stability system failure that caused loss of swashplate or tail rotor control travel when failed in a hardover condition. If the device remains in the hardover position after the stability system is turned off, control capability may be compromised. Cyclic controllability tests at high speed and at the limiting rearward flight condition, or tail rotor tests in sideward flight at high altitude, may reveal a lower control capability and a more restrictive envelope. In addition, controllability testing should be accomplished with the control rigging set at the most adverse production tolerance for the test condition; e.g., minimum forward swashplate for high speed testing.

(2) Trim. Compliance with the IFR trim requirement may be met by use of a magnetic brake with a recentering button, an electrically driven trim system activated by a “beeper” type control, or other means, so long as the system does not introduce any objectionable discontinuities in the force gradient or otherwise result in objectionable flight characteristics. Trim release devices should be free of objectionable stick jump. Electrically driven trim systems should have a smooth change in force with a rate compatible with the normal rotorcraft maneuvers. Only the cyclic trim control must exhibit positive self-centering characteristics. Collective and directional controls are not required to incorporate positive self-centering characteristics, but these controls should not move when released by the pilot (adjustable friction devices are satisfactory); however, for systems which use hydraulic or pneumatic dampers, control motion following release by the pilot is permitted during the time interval when the damper is bleeding off. Movement of the trim controls should produce a similar effect on the

rotorcraft in a plane parallel to that of the control motion. The control system free play and breakout force must be evaluated to assure a close and direct correlation between control input (force and deflection) and rotorcraft response (pitch, roll, yaw, and heave (vertical motion)), and to permit small, precise changes in flight path. If trim control is provided in a stability augmentation system (SAS), the control should be of such design and so installed that any failure will not create a hazardous condition. If an inadvertent out-of-trim condition can be developed, its effect on the rotorcraft should be investigated. These failures or malfunctions should be investigated as outlined in (6) “Stability Augmentation Systems” which follows. The controls for this trim function should be installed such that, the controls should operate in the plane and with the sense of motion of the rotorcraft. Each control means should have the direction of motion plainly marked thereon or adjacent to the control.

(3) Static Longitudinal Stability.

(i) Positive static longitudinal stability is a key IFR requirement which assures a self-correcting airspeed response and allows a pilot to recognize any substantial change in speed. The phrase “substantial speed change” as used in FAR 29, Appendix B, Paragraph IV, is normally considered to mean at least a 10 knot departure from trim speed. Such a change in airspeed must be accompanied by a stick force clearly perceptible to the pilot (i.e., a discernible and quantifiable force gradient). Very shallow force gradients can be approved for systems with low deadband and low friction. Systems with significant friction and deadband require much steeper force gradients to be acceptable. The longitudinal force gradient can be determined by either of two methods. The most commonly used method (applicable only to irreversible control systems) measures the cyclic forces with the rotorcraft on the ground and the rotor stopped (with hydraulic and electric power units if required). The force applied to the cyclic stick and the cyclic stick displacement are measured and a plot of stick force versus displacement in each longitudinal direction is obtained. Following the ground test, the longitudinal static stability tests are conducted in flight as described in paragraph AC 29.175. The cyclic displacement measurements gathered during flight test are then assigned force values from the ground mechanical characteristics test and the force values are cross plotted with the corresponding airspeeds to produce a plot of cyclic force versus airspeed. The trim system should be on during the test and the aircraft trimmed at the trim speed. After each end point, the cyclic should be allowed to slowly return to the trim position. When all the force is released from the cyclic stick and the airspeed has stabilized, note the airspeed. An alternate method of determining the longitudinal stick force stability is to measure the force on the cyclic stick in flight using a hand held force gage or other force measuring instrumentation. The in-flight technique is the same as the first method. Testing should be accomplished at a minimum of two altitudes. One altitude should be low enough to assure limiting power is attained. Another should be at or near the maximum approved altitude. Reasonable interpolation is allowed. If no marginal areas are apparent interpolation over a 10,000-foot altitude range is considered reasonable.

(ii) Tests for static longitudinal stability during approach should include the steepest approach gradient for which approval is requested. Static stability tests may be simulated by initially establishing a trimmed rate of descent for maximum approach gradient assuming zero wind conditions. Actual approach tests at the maximum approved gradient should be conducted to evaluate tracking and maneuverability, including the capability to correct downward to a glide path when approaching in a slight (10 knot) tailwind condition.

(4) Static Lateral - Directional Stability.

(i) Tests for directional stability usually require instrumentation for lateral cyclic position, pedal position, and sideslip angle. Testing for compliance with the specific directional requirement is relatively simple; however, the pilot should look for significant longitudinal trim changes and short period dynamic modes which might occur only during sideslip conditions. Side force characteristics are indicated by the variation of bank angle with sideslip during steady heading sideslips. The number of ball widths of deflection is also indicative of the side force cue available to the pilot. A correlation between sideslip angle and ball widths of skid can be obtained at given speeds for use during later testing after sideslip instrumentation is removed. A simple yaw string can be calibrated in a similar manner. The TIA should define the maximum sideslip angles which should not be exceeded during the flight test program. These angles must not be greater than the structural sideslip envelope substantiated and are not required to be that sideslip angle obtained with full directional pedal deflection. Sufficient side force cues should accompany sideslip to alert the crew when approaching sideslip limits. This is needed to assure that structural sideslip limits will not be inadvertently exceeded in service. Although not stated in the requirement, flight conditions for demonstration of static longitudinal stability are also appropriate for demonstration of static lateral-directional stability.

(ii) Dihedral requirements may be more difficult to assess. For those rotorcraft which do not meet the position and force gradient requirements for the conventional, cross-controlled sideslips, there are alternative tests which may be used to determine acceptable characteristics. If directional pedals are utilized in steady sideslips, the resultant rolling tendency is the sum of (1) the aircraft's roll due to sideslip tendency (dihedral) and (2) the aircraft's roll due to directional control input. If the rotorcraft has a tail rotor which is excessively high or low in relation to the rotorcraft's vertical center of gravity (CG), application of tail rotor thrust will introduce a significant rolling moment. The basic intent of dihedral stability testing is to determine the rotorcraft response to sideslip exclusive of directional control input. In general, if a tail rotor configuration is involved, and the tail rotor is above the vertical CG of the rotorcraft, the effect of pedal input upon dihedral effect is destabilizing during conventional, control-induced sideslips.

(iii) There are two alternate methods which, for small angles of sideslip, can give an indication of the basic dihedral stability of the rotorcraft. Both methods involve freezing directional controls while artificially creating sideslip by other means.

(iv) The first method is only applicable for rotorcraft with single main rotor systems. To utilize this method, the rotorcraft is stabilized in a given flight condition and small collective (torque) changes are applied in each direction (e.g., ±5% & ±10%) while holding pedals fixed. Sideslip angle, lateral control position, and lateral control force may be measured and plotted for small torque changes from trim. This technique will not work for aircraft which have collective to pedal or collective to lateral control couplings.

(v) In the second method, the rotorcraft is stabilized in a trimmed flight condition with a small amount of bank (5-10°). The rotorcraft is then rolled to an approximately equal angle of bank in the opposite direction holding the pedals fixed. The change in direction of bank results in a small change in sideslip angle and again sideslip angle may be plotted versus lateral control position and/or force. This test should be conducted in both directions and the results averaged. This method can give reasonably accurate results for small perturbations. Other factors contribute to the results of either of these two methods. It is always important to assess the roll due to sideslip tendency with pedal induced sideslips to assure lateral control forces are reasonable and in a proper direction for directional out-of-trim conditions, and to assure the pilot has adequate sideslip cues.

(vi) Wording of the dihedral requirement is intended to allow slightly negative dihedral stability at critical loading conditions. This will ordinarily result in positive dihedral stability throughout a great majority of the approved loading envelope. The test for maximum allowable negative dihedral effect would involve stabilization at a required flight condition, inducing a sideslip up to ±10° from trim, then assessing lateral cyclic friction/deadband to determine if roll is restrained while remaining in the control system friction/deadband so that the control may be released without resulting in the aircraft rolling in the adverse direction. When testing for this condition, lateral cyclic friction should be adjusted to the minimum value.

(vii) The intent of the dihedral rule is to allow small amounts of control system friction and deadband to mask small values of negative dihedral. Where slope of the negative dihedral versus sideslip exceeds these small values, the negative dihedral shall not be approved. The operational pilot must not be presented with opposite cyclic sensing for similar sideslip conditions as loadings and flight conditions change. In general, large values of control system friction and deadband are undesirable. The addition of friction or deadband into the control system for the purpose of satisfying the dihedral requirement is not acceptable.

(viii) In approving small negative dihedral values, the pilot should ensure that other positive flight cues, such as suitable side force, accompany sideslip. This will aid the pilot in determining direction of sideslip so that no reverse sensing or confusion accompanies sideslip conditions.

(5) Dynamic Stability.

(i) Dynamic characteristics are defined in quantitative terms; however, some areas of interpretation and technique need special consideration:

(A) Unlike fixed-wing aircraft where the size of the input has no effect on damping ratio, rotorcraft can be sensitive to the type and size of input used to excite each dynamic mode. For instance, it has been found that for the phugoid-type dynamic oscillation, damping ratio is inversely proportional to the size of the input. It therefore becomes important that dynamic excitations be sized to approximate the response of the rotorcraft in a moderate turbulent gust. Also, the dynamic input should be made with the control(s) which most accurately simulates the typical aircraft gust response. Obviously, for this evaluation some flying of the rotorcraft in turbulence is necessary to obtain knowledge of the rotorcraft's gust response. Pulses and doublets may be used to generate disturbances similar to a gust. To assist returning the control(s) to the trim position a hand held jig may be used. Use of attitude and rate instrumentation is desirable. The pilot may find that collective excitation, or collective in conjunction with cyclic, is most appropriate for gust simulation.

(B) The second area of concern in evaluating dynamic response is whether to let only one axis respond to an excitation or to let the rotorcraft respond in two or more axes. When it can be done safely, the rotorcraft should be allowed to follow its dynamic response in all axes. In other words, if pitch oscillations feed into roll, the pilot should attempt to observe and record the total aircraft dynamic response in both pitch and roll.

(C) The third area concerns strict compliance with the exact wording of the dynamic requirement. In this regard, a neutrally damped oscillation with a period of 19 seconds would not be acceptable; however, a very divergent oscillation that doubles in amplitude in 21 seconds would be acceptable. The 19-second oscillation is much less severe than the 21-second oscillation and yet is unacceptable by the "letter of the law." Figure AC 29 APX B-1 below is a graphical display of the dynamic requirement. The 19- and 21-second oscillations are shown as points (1) and (2). Point No. 1 is positioned much more toward the acceptable portion of the graph and yet by the "letter of the law" is unacceptable. The intent of the dynamic requirement is roughly approximated by the dashed-curved line. Areas to the right of that line may be considered for findings of equivalent safety.

(D) A fourth area requiring special care in testing is the aperiodic requirement. The most common aperiodic motion is the spiral characteristic which results when aircraft attitude is displaced in roll. The preferred method for testing this requirement is to stabilize precisely on a trimmed condition in straight flight, then displace the rotorcraft to 10° of bank, stabilize momentarily, set the controls as they were positioned for straight flight, and release them. Time and bank angles are then recorded. Recovery is initiated when bank angle or roll rate becomes excessive. Of particular interest is the time for bank angle to pass 20° and this time should not be so short as to cause the aircraft to have objectionable flight characteristics in the IFR

environment. The time period to double amplitude (20°) should be at least 9 seconds. It is vitally important that controls (particularly lateral cyclic) is positioned exactly as it was for the straight flight condition. If a high resolution force trim system is not incorporated, an alternative method may be used. In this second method, the rotorcraft is trimmed for straight flight as described above and controls are released. Roll attitude may simply be allowed to vary naturally with time or small pulse input may be made with pedals. It is important that controls are positioned precisely as they were for the trimmed, straight flight condition and a plot of bank angle versus time is obtained. This plot is then compared against a divergent roll condition which doubles in amplitude every 9 seconds. Of particular interest is again the rate passing 20° of bank. If airspeed changes as the aircraft rolls or if roll/pitch coupling occurs, these changes should be allowed to interact naturally until recovery is necessary. Due to the sensitive nature of this test, smooth air is essential. Repeatability may be a problem. At least two test points in each direction should be obtained at each trim condition. Results may be averaged if they show reasonable repeatability. The same procedures may be utilized for an aperiodic pitch response; however, a displacement of 5° from trim should be used and of particular importance is the pitch rate passing 10°. Again, at least two test points in each direction should be obtained for each trim condition. Although not stated in the requirement, the flight conditions for demonstration of static longitudinal stability are also appropriate for demonstration of dynamic stability. The degree of testing referred to here represents that which might be required of a marginally stable rotorcraft. For those configurations which provide good aerodynamic stability or use varying degrees of SAS, the scope of the demonstration program would be decreased significantly.

(ii) Control system dynamics should also be evaluated. This may be accomplished by lightly bumping each control in flight and observing its free response. Any resulting control motion must dampen quickly and should not be driven by aircraft/control system interaction. This will assure safe flight in the event a control is inadvertently bumped or released from an out-of-trim condition.

(6) Stability Augmentation System (SAS).

(i) If a SAS installation stabilizes the rotorcraft by allowing the pilot to “fly through” and perceive a stable, well-behaved vehicle, it qualifies as a SAS, and if reliable, receives credit under Sections III through VII of Appendix B for use in complying with all-handling qualities requirements. If a conventional autopilot does not provide “fly through” capability or allow the pilot to perceive a stable, well behaved vehicle through his manipulation of primary flight controls and feedback from those controls, then it tends to remove him from active involvement in flying and is eligible primarily as a workload reliever.

(ii) If handling qualities credit is given for a SAS then it must be shown to be reliable. If a reliable SAS is incorporated, it should be operational during handling qualities testing for trim and stability. Reasonable single failures of the SAS must be evaluated and the resultant handling qualities must be evaluated to assure that in this

degraded configuration, (1) handling qualities have not been degraded below “VFR” levels defined in FAR Part 29, Subpart B, (2) the rotorcraft is free from any tendency to diverge rapidly from stabilized flight conditions, and (3) the rotorcraft can be flown IFR throughout its endurance capability without undue difficulty by the minimum flight crew. Compliance with a majority of the IFR handling qualities requirements is desired and the degraded characteristics should be documented and explained. Revised flight envelope boundaries for the failed condition may be considered if they are controllable by the pilot, e.g., altitude and airspeed. When loss of a SAS results in a need for minor adjustment of a flight condition then a system can be accepted that allows failures during the life of each rotorcraft. If loss of the system will prevent continuation of safe flight and landing, the reliability of the system must be high enough to assure that failure of the system will not be expected to occur during the life of the rotorcraft fleet. When evaluating the reliability of a system, the installation of the system should be considered as part of the design. The total system including inputs, outputs, environment, isolation features, and exposure times is a pertinent consideration.

(iii) Stability augmentation system reliability is evaluated by Systems and Equipment personnel. If credit is to be given for system reliability and the applicant exempted from consideration of malfunction, hardover and oscillatory conditions (limited to critical frequencies determined during autopilot failure analysis), a thorough system evaluation is needed. Flight test personnel should coordinate closely with the systems and equipment personnel whenever credit is given for advanced design and system reliability because the hardover/malfunction condition may not require in-flight testing. The decision is made on the basis of system design, failure analysis, and overall probability of malfunction. If flight testing is required, appropriate delay times as shown below, are required. If the system is to be approved without flight restrictions (operating at all times), malfunctions should be demonstrated to be satisfactory during takeoff, climb, cruising, landing, maneuvering, and hovering. If a flight restriction is provided, it should be determined to be an appropriate and relevant operating limitation, and it should be specified in the rotorcraft flight manual. Significant information regarding the restriction should be made available to the pilot in the operating procedures section of the rotorcraft flight manual. If the restriction excludes operation under any of the flight conditions listed above, flight testing of the condition is not required.

Flight Condition	Time Delay
Hover, takeoff, and landing	Normal pilot recognition and reaction time
Maneuvering and approach	Normal pilot recognition plus 1 second Note: Recovery from simulated malfunctions of any SAS axis occurring while the pilot is applying control inputs to cause rotation about that axis may be initiated with normal pilot reaction; the 1-second delay in maneuvering flight pertains to established turns (level, climbing, and descending) only.
Climb, cruise, and descent	Normal pilot recognition plus 3 seconds

For rotorcraft requiring a minimum crew of two pilots and with stability systems that do not have coupling capability such as vertical speed hold, altitude hold, or navigation tracking, a time delay of 1 second may be used in climb, cruise, and descent. Reference to visual cues is assumed only in hover, takeoff, and landing. For other flight conditions, the pilot is assumed to recognize the malfunction condition without reference to outside visual cues. If the stability system has not previously been certified as a part of the aircraft for VFR flight, malfunctions should also be conducted throughout the VFR envelope utilizing the appropriate delay times in Advisory Circular 29-1. Pickup to a hover, landing, sideward, rearward, and forward hovering flight must be considered, because of the visual cues available to the pilot operating VFR, shorter delay times following stability system malfunctions may be appropriate. These delay times are:

(A) One to 3 seconds delay for cruising flight. (The time delay selected should be based upon the degree of stability provided and the amount of alertness required of the pilot. For example, a 3-second delay would normally be appropriate for cruise speeds up to and including V_H while a 1-second delay would be appropriate from V_H to V_{NE}.

NOTE: If the improved stability and the resultant higher degree of relaxation by the pilot has justified time delays greater than 1-second minimum in cruise, then a reexamination is in order of the engine failure time delays used during the original type certification prior to the SAS installation.

(B) One second delay for climbing flight.

(C) Zero second delay for takeoff, landing, hovering, and maneuvering flight.

(iv) A good method to accurately determine pilot recognition and reaction time is to establish typical climb, cruise, descent, and approach conditions and instruct a subject pilot to react as soon as he recognizes individual hardover conditions in pitch, roll, yaw, and heave (if installed). Several pilot subjects may be used. Sensitive recording instrumentation is needed to show the hardover input to the actuator and the pilot's initial control movement. This procedure is usually conducted prior to the critical hardover tests so that the total necessary time delay (recognition plus 3 seconds, etc.) can be established. This procedure actually determines recognition plus reaction time, although reaction time has been shown in hardover testing to be a relatively constant 0.5 seconds. Different recognition times for various axes are not unusual. During one recent program, recognition time for directional hardovers was 0.3 second, but for roll hardovers was 0.9 second. There is typically 0.1 second or less scatter among properly briefed pilots. Recognition time is then added to delay time to determine total necessary delay for hardover testing. As an example, for the above roll condition, a single pilot configuration would require a total 3.9 second duration from signal input to initial control actuation for recovery. Allowable attitude excursions must also be considered. Although allowable attitude excursions during hardover testing probably depend more upon acceleration and rate of acceleration than on attitude, a general rule of 30° pitch and 60° bank may be used. For some designs, maximum safe attitudes may be lower. Certain responses with rapid initial motion, but self-correcting characteristics thereafter have been allowed to diverge as much as 55° in pitch and 80° in roll as long as no rotor system or control difficulties result during malfunction or recovery. The key is: Can a safe, reasonable recovery be made without exceeding aircraft limits? During high speed malfunction testing, the maximum speed allowable during malfunction or during recovery is 1.11 V_{NE} (V_{DF}). The maximum allowable speed for SAS operation must be adjusted to prevent exceeding V_{DF} during malfunction testing at any altitude.

(v) Applicable procedures and techniques for conduct of hardover tests are contained in paragraph AC 29.1329. All cockpit emergency controls including emergency quick disconnects should be "red." The quick disconnect may be actuated at initiation of recovery. Other disconnects should only be actuated after full aircraft control has been achieved following recovery. Aircraft limits may not be exceeded during malfunction or recovery. If a monitor device automatically disconnects the SAS, it must be clearly annunciated to the crew.

(vi) Series actuator hardover conditions in some rotorcraft can seriously degrade control margin. Critical loadings, power settings, RPM, and altitudes in conjunction with a SAS actuator hardover in an adverse direction can result in reduction of control travel requiring flight envelope constraints. Flight testing is usually necessary to determine the appropriate flight envelope reductions.

(vii) Subsequent failures and unrelated probable combinations of failures must be considered, including subsequent SAS failures. Systems and equipment section analysis should provide necessary SAS malfunction combinations for flight

testing as a result of their system analysis. Minimum requirements for dispatch and procedures following failure should be included in the malfunction analysis. Results of the probability analysis and the resultant malfunction configurations are primarily the responsibility of the systems and equipment section.

(viii) No reasonably probable failure should result in a worse condition than that tested for hardovers. For example, if a magnetic brake force trim system is employed, failure of electrical power to the magnetic brake circuit may cause the cyclic control to fall which may result in a more dangerous flight condition than individual SAS hardovers. The overall control system is to be evaluated for all probable failures to preclude hazardous failure conditions. Other areas for investigation include beep trim and auto trim failures. The delay times of paragraph b(6)(iii) are appropriate for all such failures. System malfunctions may also include component failures which result in oscillatory outputs of the actuator(s). These should be sustainable at least as long as the specified hardover delays, should be manageable thereafter with hands on the controls, and should allow disconnect of the malfunctioning system.

(ix) Engine failure requirements are not entirely consistent with the SAS failure time delays shown in paragraph b(6)(iii). Engine failure time delays remain as specified in § 29.143(d) and they are lower than corresponding SAS failure delays. Critical engine failure conditions should be reverified during simulated instrument flight with primary reference to flight instruments. Lower time delays for engine failure have been justified on the basis of immediate cues for the critical high powered condition, and requirements for engine failure warning systems. Many rotorcraft designs simply cannot endure a 3-second time delay for critical engine failure conditions. Nevertheless, engine failure, autorotation entries, and autorotation descent (for single engine rotorcraft and multiengine rotorcraft without Category A engine isolation) must be evaluated in simulated IFR conditions and these flight characteristics must be acceptable.

(7) Controllability.

(i) Control harmony should be present. There should be no objectionable cyclic to collective or roll-yaw-pitch cross coupling.

(ii) Control forces following a control system malfunction such as a hydraulic system failure should be low enough to allow completion of the intended flight. It may not be possible to land early during an actual IFR flight.

(iii) There should be no tendencies for pilot induced oscillations; there should be no sustained or uncontrollable oscillations resulting from the efforts of the pilot to control the rotorcraft.

(iv) The control system must have sufficient resolution to permit accurate and precise instrument maneuvers. Some control systems with high breakout forces in

conjunction with low control force gradients do not lend themselves to satisfactory instrument flight capability.

(8) Cockpit Arrangement.

(i) The primary flight instrument basic T (or a modified T with VSI above the altimeter) should be located directly in front of the pilot. All annunciation necessary for operation of stability systems should be readily in view. Secondary flight (or navigation) instruments such as radar altimeter and secondary radio course information, DME, etc., should be grouped around the periphery of the T. Next in priority are primary power instruments such as torque and rotor RPM. Powerplant instruments and backup attitude information should be placed in the remaining panel areas. Various research and development efforts and previous certification programs have revealed that it is desirable not to locate the standby attitude indicator immediately adjacent to the basic flight instrument T. The standby attitude indicator must be usable and flyable from the primary pilot station (and any other pilot station); however, locating it too close to the primary instruments may be undesirable and should be evaluated. If the standby attitude information is close to the pilot's normal flight instrument scan, he may begin to compare attitude information between the two indicators in his normal instrument scan. Every pilot eye motion to compare these indicators could be a wasted motion that could be more efficiently applied in the normal scan. The pilot should fly either the primary or the backup indicator and it may be an aid if these indicators are noticeably separated. When the standby indicator is located apart from the normal scan and the primary indicator fails, the pilot is conscious of a distinctly different instrument scan and is less likely to be continuously coming back to the center of the basic T for attitude reference. Physical separation can assist the transition to standby attitude flight.

(ii) All cockpit controls necessary for normal and emergency operations should ideally be located so that they may be actuated without upper body movement. Moderate head and body movement has been accepted; however, these motions must be evaluated for their vertigo inducing effects. No IFR controls should be located aft of a vertical plane passing left to right (laterally) through the pilot's body.

(iii) If a copilot position is approved, the copilot must have a complete set of flight controls, and a complete set of primary flight instruments. The copilot must be capable of independently flying and navigating the rotorcraft from his position. The copilot must be capable of controlling at least one primary navigation source so that he can operate the rotorcraft during normal conditions without relying on the first pilot to perform needed cockpit functions. Some instruments can be shared between pilots depending on instrument panel presentation. Some examples from previous programs include standby attitude, rotor tachometer (if the aircraft has automatic governing and the crew is provided visual and aural RPM warning), and secondary powerplant instruments such as N_G, oil pressure, and temperature.

(iv) Proper cockpit annunciation is essential for safe operation. SAS and autopilot modes must be properly annunciated. Appropriate annunciator color coding is contained in § 29.1322. There must be no question in regard to the source of navigation information presented to the crew. Where navigation switching is available between individual displays and between pilot positions, the first pilot should have overriding control for his displays.

(9) IMC Evaluation.

(i) As part of the flight test program, new rotorcraft undergoing IFR certification should be flown in the air traffic control system in actual day and night instrument meteorological conditions. Items for consideration during the IMC evaluation include:

(A) Ability of the rotorcraft to safely operate in the National Airspace System, including crew capabilities to cope with probable malfunctions. Examples of failures imposed during this IMC evaluation on previous programs are shown below:

(1) Hydraulic failure

(2) Individual COMM, NAV, or intercom failure

(3) Engine failure

(4) Loss of any power input

(5) SAS failure

(6) Trim failure

(7) Individual failure of each vertical and directional gyro

(B) Visibility during low approach conditions in precipitation.

(C) Glare and reflections at night in clouds.

(D) Workload demands on the minimum flight crew including the failures in paragraph (9)(A)(1) above.

(E) Handling qualities in turbulence throughout the IFR approved envelope including typical IFR flight maneuvers,

(1) With reasonably anticipated stability augmentation system failures,

(2) With reasonably probable control system failures (hydraulics, force trim, basic ship systems, etc.),

(3) With the typical workload conditions associated with operating in high density traffic areas, and

(4) With other reasonable, probable failures.

(F) Cockpit leaks in precipitation which affect pilot efficiency, safety, or rotorcraft airworthiness.

(ii) Rotorcraft that are an improved, modified, or later model of previously approved type that have no significant changes in the fuselage and windshield configuration, the aircraft lighting system, and the rain removal systems do not need to be flown in clouds. They may need to be evaluated in clouds if, in the judgment of the flight test personnel, there is some doubt as to the similarity of the configuration. However, a previously approved rotorcraft undergoing IFR certification tests for a different Stability Augmentation System should not require a series of actual IFR flights just to determine pilot workload, or whether it can be flown in clouds.

(10) Static Position Error. The static position error should be reevaluated to determine altimeter error during instrument approach conditions. This is particularly important when high angle approaches (above 3°) are approved. Static position error for 3° approaches can typically be approximated by the level flight error. Level flight error is constrained by the requirements of § 29.1325(f). The direction of error is important. If the indicated value is lower than actual value, the error is in a conservative direction and further investigation may not be required. The direction and magnitude of static position error should be determined for steep angle approach conditions and additional information provided when necessary in the Rotorcraft Flight Manual. An investigation of static system response during the go-around transition should be investigated.

(11) Cross Coupling. IFR handling qualities are enhanced by providing low levels of coupling between axes. During the flight evaluation, pilots should be alert for strong cross coupling tendencies between yaw and pitch, heave (collective) and pitch, heave and roll, or roll and pitch. Any strong coupling effects between these motions may produce unacceptable handling qualities for IFR flight. The rotorcraft must be able to make a smooth transition from any flight condition. As an example, large rolling or pitching moments with collective application would represent questionable handling characteristics for the IFR missed approach condition.

(12) Electrical, Avionics, and Instruments. Some aircraft have been certified with different equipment from that suggested in this subparagraph because the certification criteria for IFR has evolved in several stages. The following guidance refers to the latest certification requirements:

(i) Additional Avionics/Instruments. The avionics/instrument required for IFR certification beyond those required for VFR certification should be as follows:

(A) Standby Attitude Indicator in place of a rate of turn indicator required by § 29.1303(g). Power for operation and lighting must be independent from the rotorcraft electrical generating/starting system. Operation must be maintained for 30 minutes after total aircraft electrical power generating system failure.

(B) Alternate Static Source. An alternate static source with a means of selecting this source must be provided for single pilot configurations.

(C) Thunder Storm Lights. Thunder storm lights are high intensity white lighting that flood the instrument panel area containing the basic flight instruments.

(D) Direction Indication, Gyro Stabilized. Magnetic in place of non-magnetic required by § 29.1303(h).

(E) Navigational Systems. Navigational systems required by the applicable operational rules must be provided.

(F) Communication Systems. Communication systems required by the applicable operational rules must be provided.

(G) Other electrical/electronic equipment. Other electrical/electronic equipment required by the applicable operational rules must be provided.

(ii) Electrical Power Availability for Avionic and Instrument Systems. Minimum avionic and instrument systems should remain operative after electrical power failures in relation to IFR operation. The lists that follow suggest the minimum Avionic and Instrument Systems that should remain operational after a single failure of the generating system and after failure of all but the emergency power source. These lists do not address the basic equipment required for non-IFR related operation. These basic equipment requirements are addressed by the appropriate paragraph of this AC. Where a time-limited power source is provided for compliance with FAR 29.1351(d)(2), in determining the endurance it should be assumed that flight under instrument flight rules will be continued for a period of not less than 30 minutes following the failure of the normal electrical power generating system.

(A) Avionic and instrument systems that should remain operational, for IFR approved rotorcraft, after a single failure of the electrical generating system. The rotorcraft must be capable of IFR flight for one-half the maximum cruise duration. The suggested minimum avionic and instrument systems are as follows:

(1) Flight Instruments. Same as § 29.1303 requirements, except as defined by subparagraphs AC 29 Appendix B (12)(i)(A) and (D).

(2) Communications. One VHF radio.

(3) Navigation System. One navigation system, including necessary sensor inputs such as directional gyros.

(4) Transponder.

(5) ICS System. Required for two pilot approval.

(6) Instrument Lights (or equivalent).

(B) Avionic and instrument systems that should remain operational, for IFR approved rotorcraft, after total failure of the electrical generating system. The rotorcraft must be capable of flight for a minimum of 30 minutes. The suggested minimum equipment is as follows:

(1) Magnetic Compass.

(2) Airspeed-Altitude-Attitude Presentation.

(3) Communications One VHF System.

(4) Instrument Lights (or equivalent).

(5) ICS System-For Two Pilot Approval.

(C) Additional requirements for Category A rotorcraft. Where a time-limited power source is provided for compliance with FAR 29.1351(d)(2), in determining the endurance it should be assumed that flight under instrument flight rules will be continued for a period of not less than 30 minutes following the failure of the normal electrical power generating system.

(iii) Directional Instruments. A magnetic, gyro stabilized direction indicator is specified because navigation in instrument flight must be precise. In rotorcraft, the nonstabilized magnetic indicator is subject to many errors, particularly in turbulence. Therefore, it is inappropriate as the primary source of directional information, but it is adequate as an emergency source. A nonslaved directional gyro is also inappropriate as the primary source of directional information because of drift and the requirement to set it to some other precise reference.

(A) As a minimum for single pilot IFR, a nonstabilized magnetic indicator (such as a “whiskey compass”) and a magnetic gyroscopically stabilized direction indicator system (slaved) are required.

(B) The minimum for dual pilot certification includes the instruments required for single pilot, and an additional independent gyroscopically stabilized directional indicator system (slaved or unslaved).

(13) IFR Electrical System.

(i) General.

(A) The entire electrical system, both AC and DC portions, must be reviewed with IFR operation in mind. This review is necessary since most of the rotorcraft presently certificated do not include IFR operation as part of their certification. Many aspects of normal operation and results of failure conditions may be entirely acceptable for VFR operation, but unacceptable for IFR operation.

(B) Provisions should be made for a capability to continue flight for one-half the maximum cruise duration in the event of a single failure in the electrical system. Paragraph AC 29.1351 contains the definition of a “single failure.” The evaluation of the system under failure conditions should consider not only the failure itself, but also the recommended cockpit procedure to respond to any failure.

(C) The fault analyses of the electrical system and the results of the system testing to validate that analysis serves as a good starting place for the electrical system review. Failure of each generator, each battery, and each component, such as switches and relays, should be accounted for first since failure of equipment and components are the most probable.

(D) System failure such as tripped circuit breakers, blown fuses, loss of busses, loss of feeders, loss of ground terminals, and failure of electrical disconnect plugs should also be considered.

(E) Routing of all wiring from each power source throughout the distribution system should be reviewed. In all instances feeder wires should be routed separately from small gage control wiring. Also, wiring for each power system should be separated to the maximum extent practical from the wiring associated with other required power systems.

(F) A single electrical disconnect plug should not contain wiring for more than one generating system. Many systems incorporate automatic feeder fault protection that disables a power source experiencing a short circuit on its feeder, and in some instances passive protection has been provided for the feeders.

(G) There may be other failures that should be considered that are peculiar to the specific design being evaluated, and if so, an appropriate accounting of these failures should also be made.

(ii) Review of Regulations. The airworthiness regulations concerning electrical systems begin with § 29.1301 (reference Subpart F - Equipment) and continue up to § 29.1411. Other rules may also concern the electrical system; however, compliance with these sections should have been assured as part of the original VFR approval.

(iii) Specific Emphasis Areas. In some previous installations, changes have been necessary in the areas listed below. Future installations should be checked carefully in these areas and other areas that indicate a need for attention.

(A) Systems Affected by Icing. Gross inaccuracies in altitude and airspeed indicators resulting from icing could be disastrous in IFR flight. For rotorcraft not equipped with approved alternate static sources, static ports should be carefully evaluated and should either be heated or an analysis verified by flight test data submitted to substantiate leaving them unheated. Static line routing should be carefully evaluated for low spots. Also, if static ports are on the side of the rotorcraft, the lines should be initially routed upward just behind the static ports, then down to a drain. If the lines are initially routed upward, the lines will not fill with water when the rotorcraft is flown through rain or is washed.

(B) Overvoltage Protection. If the rotorcraft is certificated under Part 29, Category A, it is required to have overvoltage protection. Other rotorcraft may have this protection, but many do not. Since overvoltage protection is specifically required for IFR operation, the rotorcraft's basic electrical system should be very carefully reviewed for this capability.

(C) Power Adequacy Indication. Most flight instruments that use a power supply have a visual means integral with the instrument to indicate the adequacy of the power being supplied. For those required flight instruments that are not provided with a visual means, the following must be accounted for:

(1) The visual means provided must be at least adjacent to the instrument.

(2) The visual means must be adequately placarded.

(3) The power must be measured at or near the point where it enters the instrument.

(4) For electrical instruments, the power is considered to be adequate when the voltage is within approved limits. The source of power for the visual means of indication must be independent of the source of power for the instrument itself. Independent in this case means a separate circuit protective device and a separate distribution system bus.

(D) Multiple System Separation. Multiple systems performing the same function are required in certain instances because it is probable that a single system will fail. Separation of such systems would preclude a single fault from causing a multiple system failure. The following should be considered:

(1) When possible, cable routing should be accomplished to assure the maximum separation; for example, one system routed on one side of the rotorcraft and the other system on the opposite side. Some areas, such as pedestals, junction boxes, and equipment racks bring systems close together, and in these areas physical separation may be minimal.

(2) Systems that are required to be duplicated should not be routed through one electrical disconnect plug.

(3) System grounds should be evaluated to assure wiring for two required systems are not grounded to the same terminal. If a terminal strip contains grounds for multiple systems, it should be grounded to the rotorcraft's airframe in two places from two separate terminals.

(E) Circuit Protective Devices. All systems that are "required" for IFR operation are considered to be necessary for safe IFR operation, and the circuit protective devices for those systems should generally be accessible to the crew in the cockpit so they can be readily reset or replaced in flight. For example, where a capability is provided that is above the minimum certification requirements, accessibility may not be an issue. A tradeoff here, however, is that additional equipment may be required for dispatch in IFR operation.

The location of the generator field protective devices has been a problem in some rotorcraft. The protective devices that can result in the loss of a required power system source should be capable of being reset or replaced in the cockpit while in flight. This position is further supported by the occurrence of nuisance opening of circuit protective devices in rotorcraft. Further discussion on this issue is included in paragraph AC 29.1357b(4).

(F) Intercommunication System. All audio for the entire rotorcraft comes together at this system. An evaluation should be made to assure that no single failure will result in the loss of all audio for the rotorcraft. Check for common grounds, common connectors, etc. Power inputs should also be disabled.

(14) Rotorcraft Flight Manual Material.

(i) In addition to other required information, the limitations section of the Rotorcraft Flight Manual (RFM) or RFM Supplement must include the approved IFR flight envelope, minimum IFR crew requirements, the minimum required equipment for dispatch into IFR conditions that is not covered by the operating regulations, and the maximum approach gradient which has been approved. If a significant loss of altitude is experienced in any flight regime or maneuver during certification analysis or testing, the emergency operating procedures should include a statement of this altitude loss along with any other appropriate information.

(ii) The limitations section of the RFM should not include restrictions prohibiting external cargo operations. These operations are covered by FAR Parts 91 and 133 and all external load operations conducted under these parts must be approved by the controlling operations inspector. It is the responsibility of the operator to demonstrate and the operations inspector to confirm that any external load operation, including en route IFR, can be safely conducted.

(15) Rotorcraft Flight Below Instrument Flight Minimum Speed.

(i) The advent of steep angle, decelerating precision instrument approach procedures will necessitate flying at airspeeds below the instrument flight minimum speed (V_{MINI}) established for most rotorcraft under FAR 29, Appendix B, Paragraph 22(c).

(ii) Applications for findings of equivalent safety to approve instrument flight below V_{MINI} will be considered for rotorcraft meeting at least the following criteria:

(A) The rotorcraft is certified for IFR flight.

(B) For constant airspeed approach approval: a minimum approach airspeed is specified by the applicant, at which the rotorcraft is demonstrated to be safely controllable and capable of instrument flight without undue pilot effort for the duration of the approach and transition to missed approach, including acceleration to an airspeed above V_{MINI}.

(C) For decelerating approach approval: a two or three cue flight director is provided as required equipment, and the rotorcraft is demonstrated to be safely controllable and capable of instrument flight without undue pilot effort for the duration of the approach and transition to missed approach, including acceleration to an airspeed above V_{MINI}.

(D) The rotorcraft is demonstrated to be safely controllable following single failures of aircraft systems not shown to be extremely improbable at the minimum approach airspeed specified by the applicant or encountered during a decelerating approach.

(E) The RFMS contains the following information in addition to the requirements of Paragraph IX of Appendix B to FAR 29:

(1) Minimum approach airspeed, if applicable.

(2) Additional aircraft equipment requirements for flight below V_{MINI} and/or the minimum approach airspeed, if applicable.

(3) Maximum approach angle.

(4) Maximum allowable surface wind for safe conduct of the approach.

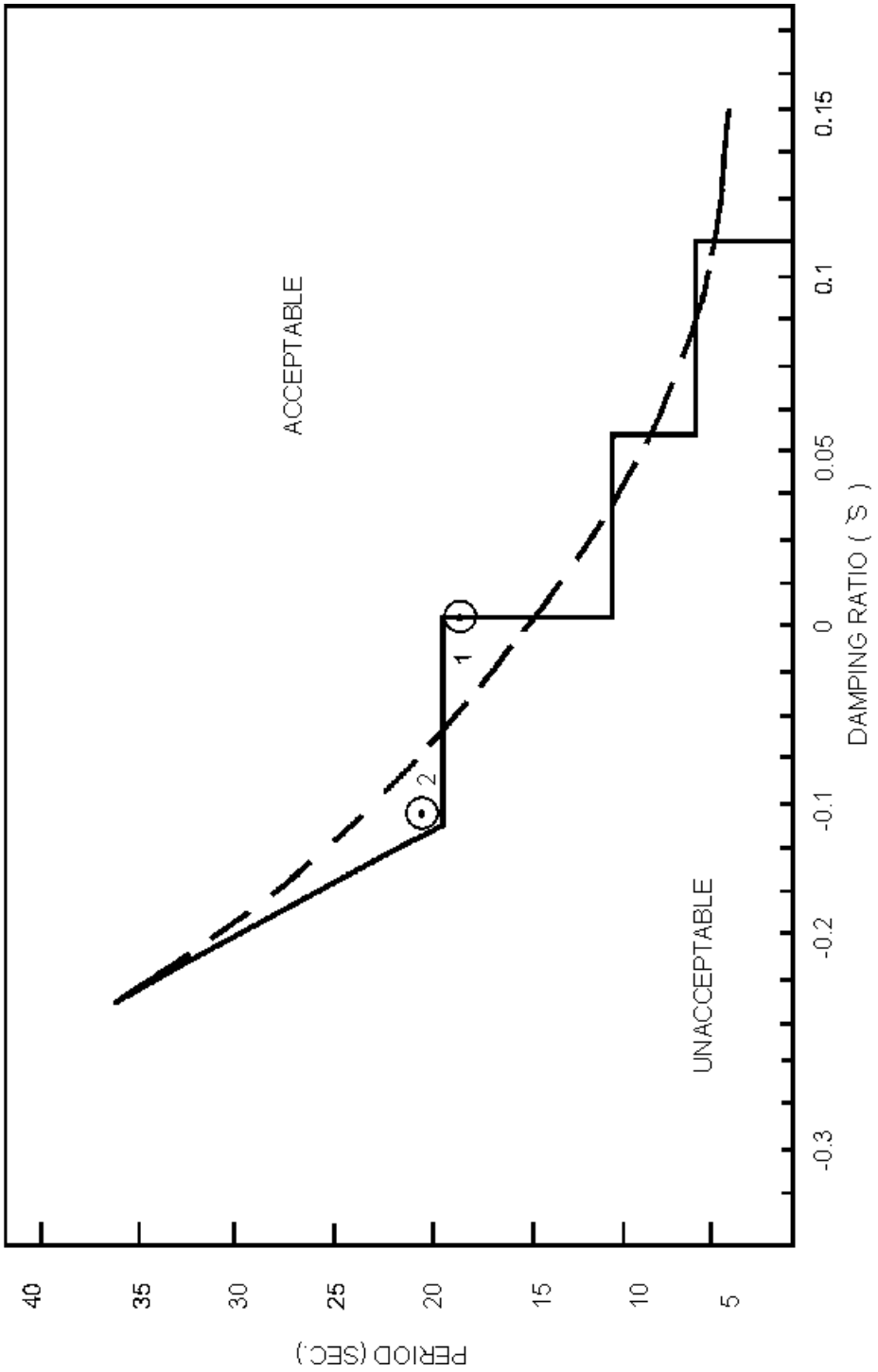

FIGURE AC 29.APX B-1 ROTORCRAFT DYNAMIC STABILITY REQUIREMENTS FOR IFR

AC 29 APPENDIX C. ICING CERTIFICATION

reserved

AC 29 APPENDIX D. CRITERIA FOR DEMONSTRATION OF EMERGENCY EVACUATION PROCEDURES UNDER § 29.803

reserved