U.S. Department of Transportation
Federal Aviation Administration

Advisory Circular

Subject: TIEDOWN SENSE

Date: 7/12/83
Initiated by: AWS-340

AC No: 20-35C
Change:

1. PURPOSE. This advisory circular provides updated information of general use for aircraft tiedown techniques and procedures.

2. CANCELLATION. AC 20-35B, TIE-DOWN SENSE, dated April 19, 1971, is canceled.

3. BACKGROUND. Each year numerous aircraft are needlessly damaged by windstorms because of inattention to weather forecasts, negligence, or improper tiedown procedures. Windstorms may be broadly classified as cyclonic storms or low pressure systems, regional or localized terrain induced winds, thunderstorms or tornado induced winds and hurricanes.

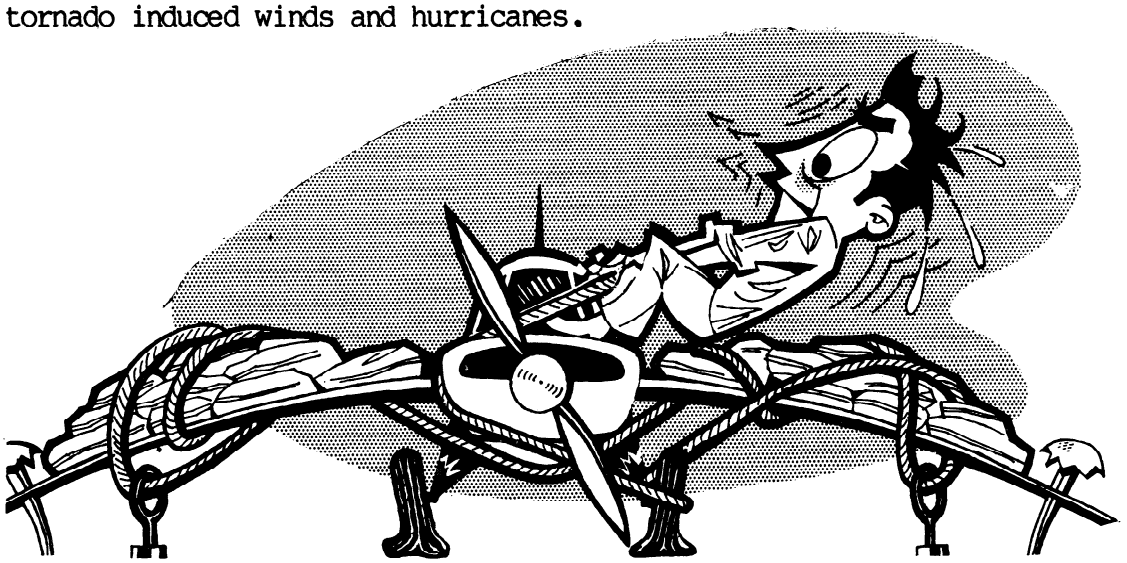

4. STORMS.

a. Cyclones. Cyclones are the lows of the weather maps. In the United States the name does not suggest any degree of intensity in the purest meteorological sense and is applied to moderate as well as intense storms. Winter storms are atmospheric disturbances that may become intense low pressure systems churning over tens of thousands of square miles. In our northland the severity of these storms makes them seasonal threats. These intense low pressure systems combine winds sometimes as strong as 90 mph with snow and cold temperatures. The National Weather Service (NWS) issues timely watches and warnings against the hazards of winter weather so that persons in the alerted area may take precautionary measures.

b. Regional or Localized Terrain Induced Winds. Geography is a factor in producing local and sometimes strong winds due to peculiar or unique terrain effects. The Santa Ana winds of Southern California, or the winds in Boulder, Colorado, are examples of infrequent localized winds that are generally forecast far enough in advance to minimize the potentially damaging effects upon parked aircraft.

c. Thunderstorms. Individual thunderstorms may measure from less than 5 miles to more than 30 miles in diameter, and may occur both in isolation and as a part of larger weather systems. In some places and seasons thunderstorms recur almost daily at almost the same time. In other places they occur rarely or irregularly. Some last a few minutes and on other occasions a succession of related events may last most of the day. The significant features of thunderstorms are high wind velocity, lightning, intense precipitation and hail. All these are variable features that appear in many combinations. Strong straight-line winds accompany thunderstorms more often than tornadoes and may be as damaging to persons and property as small tornadoes. Strong and shifting winds along thunderstorm gust fronts have been associated with tragic accidents to commercial aircraft.

Average number of

Thunderstorm days **per year**

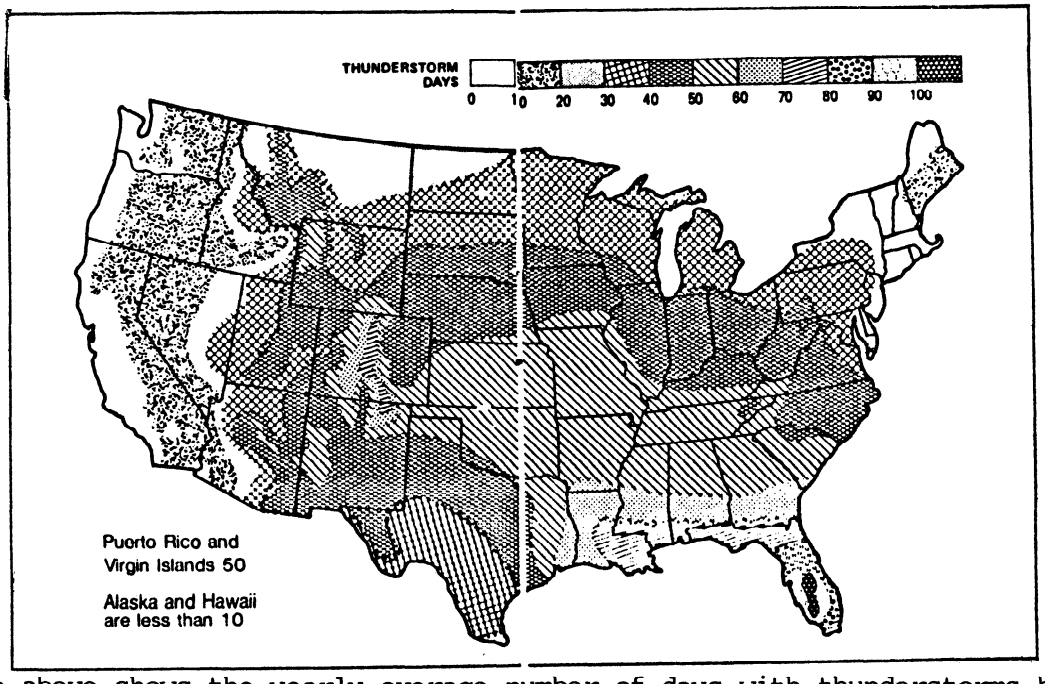

The map above shows the yearly average number of days with thunderstorms based on observations in the U.S. A thunderstorm day is considered any day during which one or more thunderstorms occur. It should be realized, however, that there are local variations which do not show on this map because of the sparsity of observations from some areas. July and August are the months with the greatest number of thunderstorms over most sections of the U.S. while December and January have the least number.

d. Hurricanes. Compared to the great cyclonic storms of the Temperate Zone, hurricanes are of moderate size and their worst winds do not approach tornado velocities. Their winds exceed 70 mph and may reach 200 mph, and their lifespan is measured in days or weeks, not minutes or hours. No other atmospheric disturbance combines duration, size, and violence more destructively. Hurricanes are a threat to the Gulf and East Coast during the hurricane season from June through November. Decaying tropical storms may on rare occasions move inland and dump flash-flood producing rainfall over California and the desert Southwest. Timely detection of and warning against hurricanes has been the task of the NWS for nearly a century.

(1) Hurricane Camile slammed into the Northern Gulf Coast near Christian, Mississippi, on the night of August 17, 1969. Camile's 200 mph winds produced a devastating tidal storm surge of nearly 25 feet just east of where the center made landfall. Camile ranked as one of the most destructive storms ever to strike the U.S. Total damage was about 1.4 billion dollars with 256 deaths credited to the hurricane along the Gulf Coast. The remnants of the dying storm produced killer flash floods in Virginia.

(2) Hurricane Frederic in September 1979 brought 160 mph winds and 12-foot tidal storm surges to a densely populated area in and near Mobile, Alabama. Destruction was widespread and damage was estimated at more than 2 billion dollars. Precise forecasts and warnings, together with prompt local action, permitted about a quarter of a million people to evacuate to safe areas. The loss of life was extremely low -- five people died. President Carter credited the low death toll of Hurricane Frederic to accurate and timely warnings coupled with orderly and extensive evacuation.

e. Tornadoes. Tornadoes are fearsome storms that usually move from the southwest. The more severe tornadoes move at forward speeds of about 60 mph accompanied by winds of 200 mph or more. Since the tornado core is rarely larger than .6 mile in diameter, destructive winds generally last at one place for less than a minute but practically all structures and much of the natural environment can be destroyed by severe tornadoes in just a few seconds. More intense than the worst hurricanes, tornadoes command much attention because of their sudden and violent onslaught and occasional sharp alteration in path. Storm forecasting and warning operations (including weather advisories to the aviation public) help reduce the harmful effects of storms.

AVERAGE NUMBER OF TORNADOES AND TORNADO DEATHS BY STATE 1953 - 1980

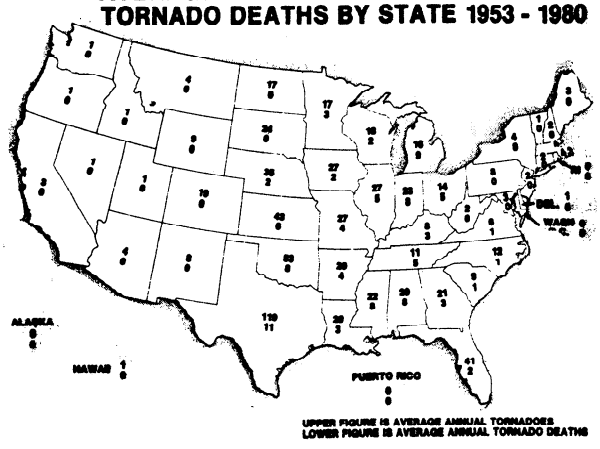

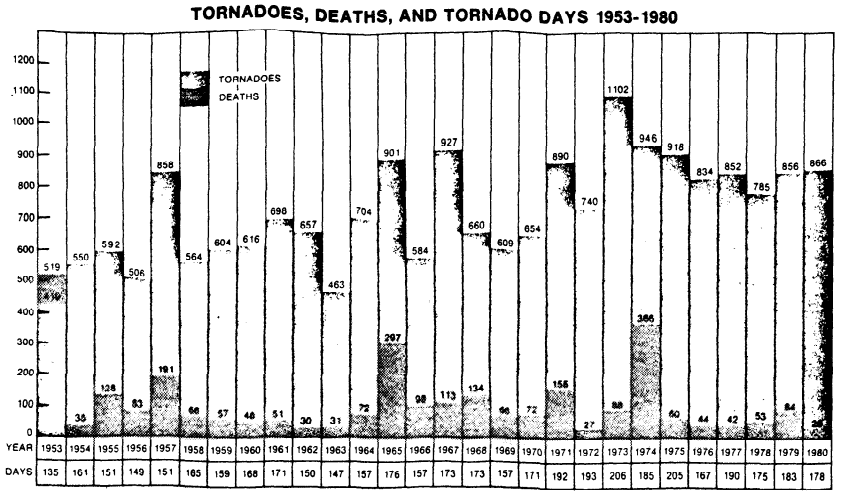

TORNADO INCIDENCE BY MONTH 1953-1980

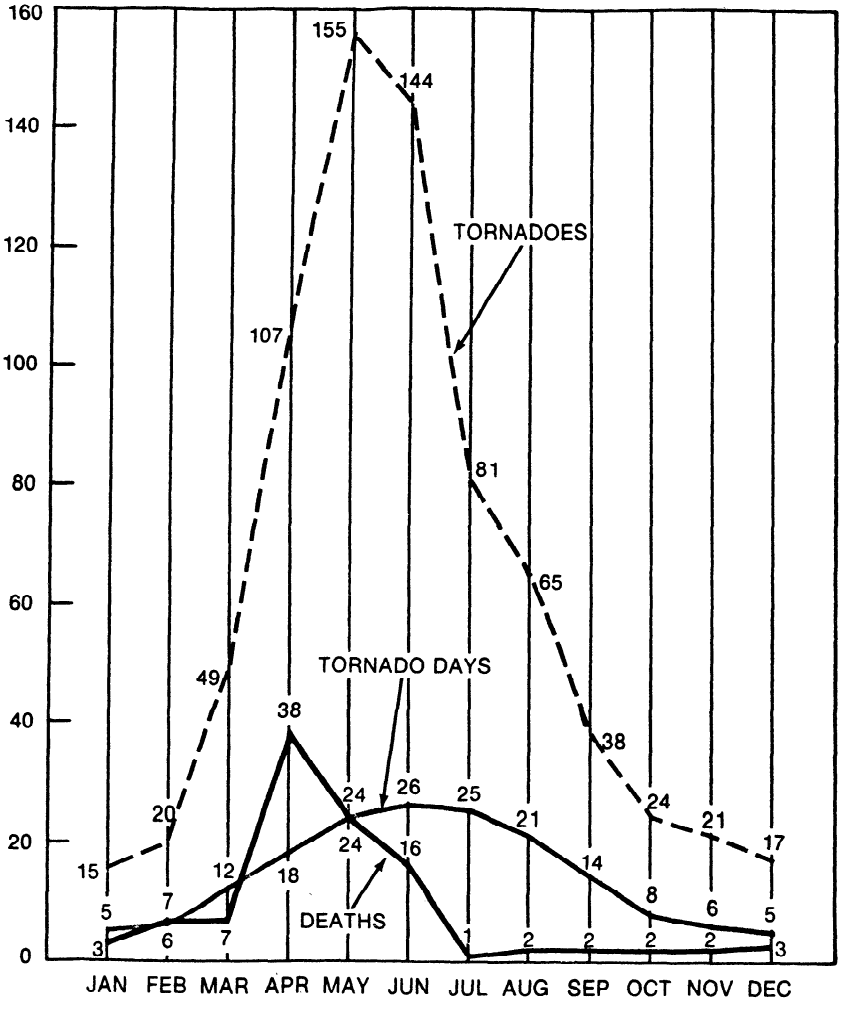

Average Annual Tornado Incidence Per 10,000 Square Miles 1953 - 1980

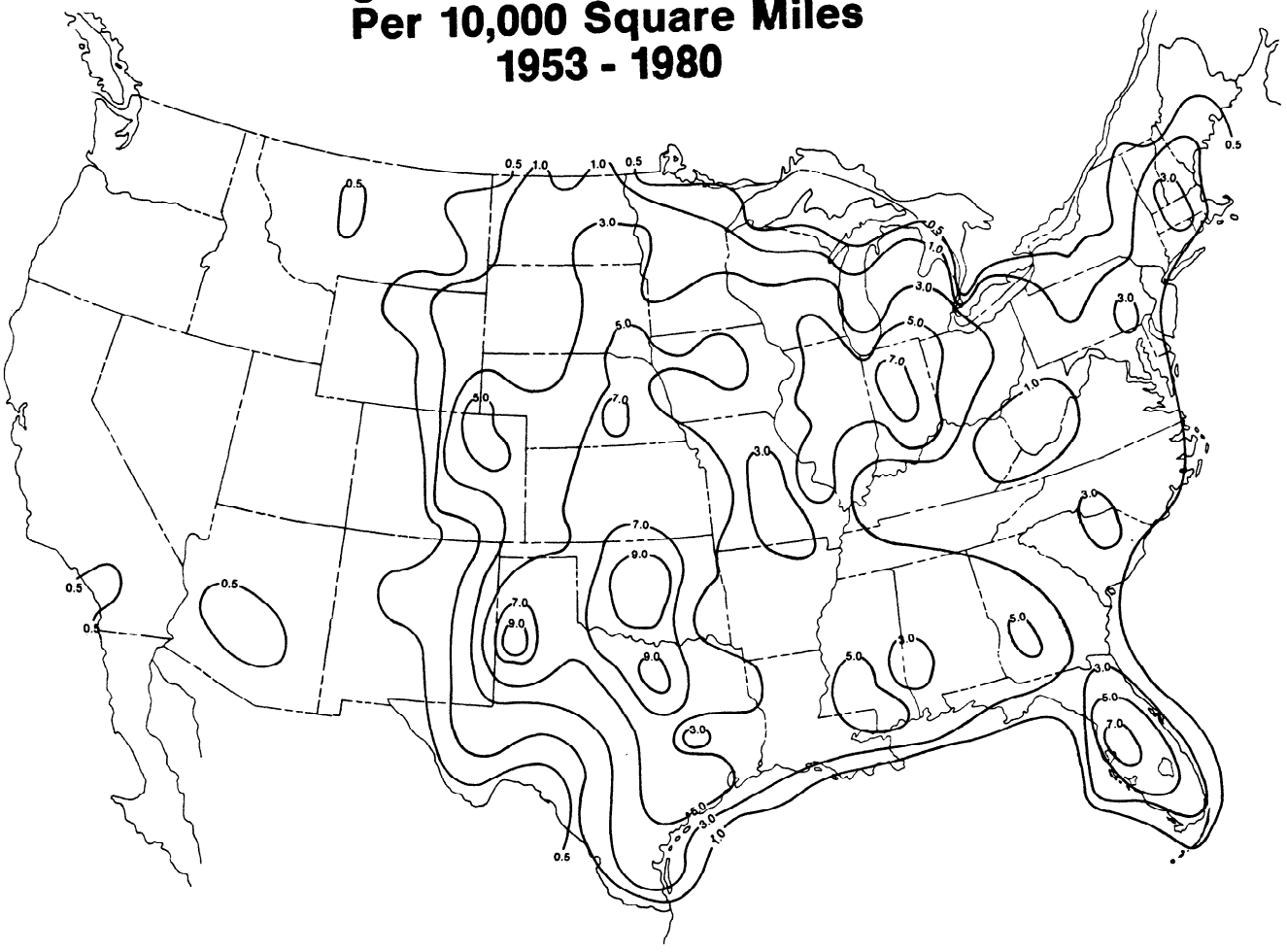

MONTHS OF PEAK TORNADO ACTIVITY

STORM BELTS

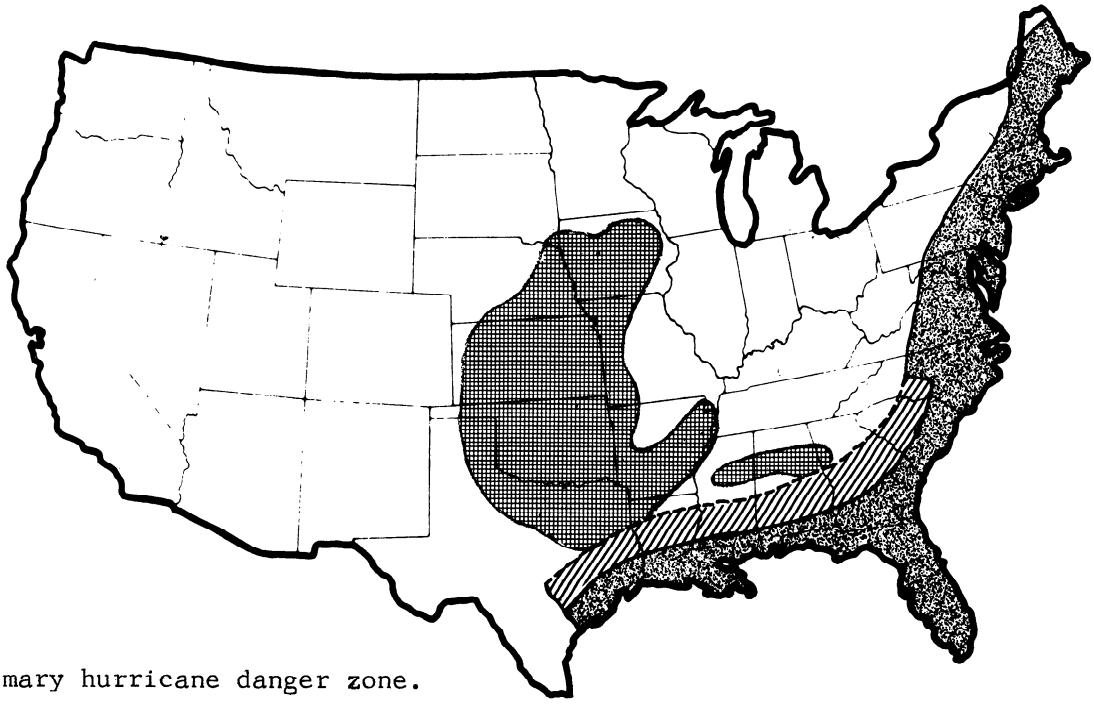

Primary hurricane danger zone.

Fringe area.

Tornado belt.

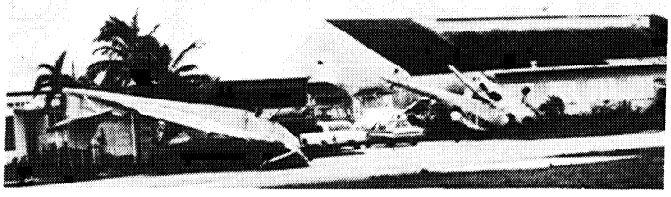

HURRICANE DAMAGE

5. PREVENTING WINDSTORM DAMAGE. The best protection against windstorm damage is, of course, to fly the aircraft out of the impending storm area provided you have sufficient warning time. The next best protective measure is to secure the aircraft in a stormproof hangar or other suitable shelter. The remaining alternative is to assure that the aircraft is tied down securely. When securing your aircraft, it is considered good practice to fasten all doors and windows properly, thereby minimizing damage inside the aircraft. Engine openings (intake and exhaust) for both reciprocating and gas turbines should be covered to prevent entry of foreign matter. Pitot-static tubes should also be covered to prevent damage or entry of foreign matter. Make sure your neighbor's aircraft is also tied down.

6. ADVANCED PLANNING. It is the mission of the NWS to help mitigate the threat to life and property from natural hazards through the issuance of tornado and severe thunderstorm watches and warnings. NWS meteorologists at the National Severe Storms Forecast Center (NSSFC) monitor atmospheric conditions utilizing information from many sources and locations. When hazardous conditions are anticipated or detected, watches or warnings are issued.

a. Watches are issued by the NSSFC to indicate when and where severe thunderstorms and/or tornadoes are most likely to occur. Watches are usually issued for areas about 140 miles wide, 200 miles long and generally 2 to 4 hours in advance of severe weather. Listen to the National Oceanic and Atmospheric Administration (NOAA) weather radio (162.400-162.550MHZ) continuous broadcasts for the latest weather information directly from NWS offices, and use commercial radio or television for further information.

b. Warnings are issued by local NWS offices when severe thunderstorms or tornadoes are indicated by weather radar, weather observers or trained spotters. A warning describes an imminent risk from a tornado or severe thunderstorm in a relatively small area such as one or several counties. The key to damage avoidance or reduction is to be routinely weather conscious.

c. Be prepared for the worst conceivable windstorm conditions: pouring rain, gusty winds ranging from 30 mph and up, for example intermittent sheets of water blowing across the runways, ramps, and parking areas, and lack of hangar facilities. With such conditions in mind, aircraft owners and operators should plan in advance by learning their aircraft manufacturer's instructions for tiedown; location and/or installation of tiedown rings for attachment of tiedown ropes; any special instructions for securing nosewheel type aircraft vs. tailwheel type aircraft; and manufacturer's charts and graphs denoting aircraft weights and relative wind velocities that would make varied tiedown procedures necessary for pending weather emergencies.

7. TIEDOWN FACILITIES. Any aircraft parking area should be equipped for three-point tiedowns. Aircraft should be tied down at the end of each flight to preclude damage from sudden storms. The direction in which the aircraft are to be parked and tied down will be determined by prevailing or forecast wind direction.

a. Aircraft should be headed into the wind, or as nearly as possible, depending upon the locations of the fixed parking area mooring points.

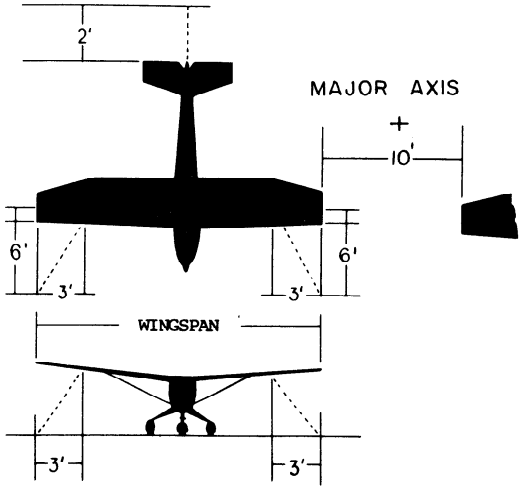

b. Spacing of tiedowns should allow for ample wingtip clearance. Spacing should be equal to the major axis (wingspan or fuselage length) of the largest aircraft usually operated plus 10 feet.

c. After the aircraft is properly located, lock the nosewheel or the tailwheel in the fore-and-aft position.

(1) Tiedown anchors for single-engine aircraft should provide a minimum holding power (strength) of approximately 3,000 pounds each. The type of anchors in use varies depending upon the type of parking area—— whether for a concrete paved surface, a bituminous paved surface, or an unpaved turf area. Location of tiedowns are usually indicated by some suitable means, either white or yellow paint, or a painted tire which has been fastened into the ground, or surrounding the tiedown anchor with crushed stone. The tiedown anchor eye should not protrude more than 1 inch above ground.

TIEDOWN ANCHORS FOR CONCRETE PAVED AREAS

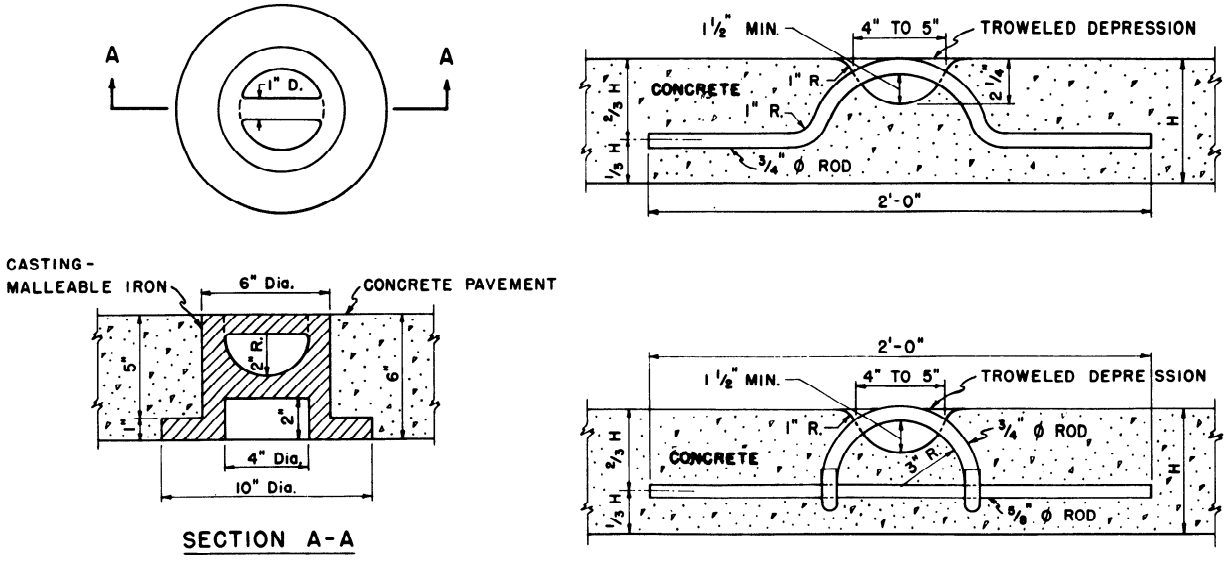

TIEDOWN ANCHOR FOR BITUMINOUS PAVED AREAS

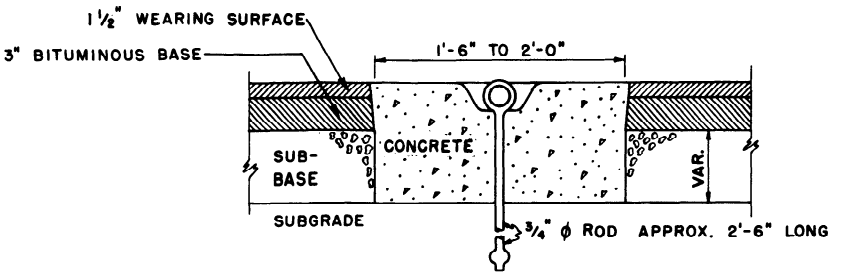

TIEDOWN ANCHORS FOR TURFED AREAS

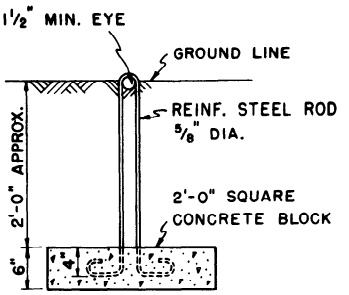

ROD AND BLOCK ANCHOR

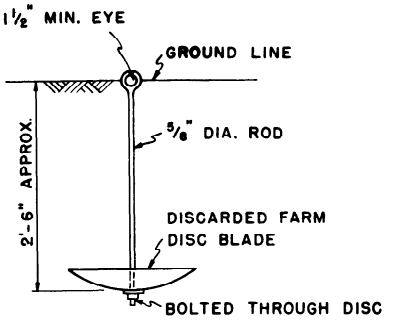

MUSHROOM TYPE ANCHOR

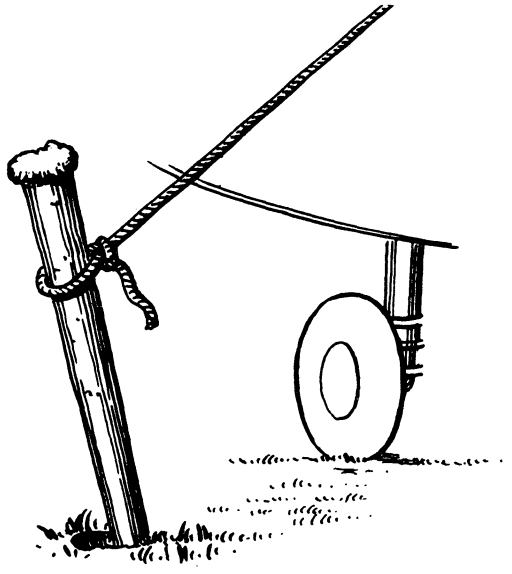

DON'T depend on wooden stakes.

(2) Stake-driven tiedowns such as depicted above will almost invariably pull out when the ground becomes soaked from torrential rains which accompany hurricanes and some thunderstorms.

(3) Tiedown ropes capable of resisting a pull of approximately 3,000 pounds should be used. Manila ropes should be inspected periodically for mildew and rot. Nylon or dacron tiedown ropes are preferred over manila ropes. The objection to manila rope is that it shrinks when wet, is subject to mildew and rot, and has considerably less tensile strength than either nylon or dacron.

COMPARISON OF TIEDOWN ROPES

FIBER CORDAGE — TYPICAL WEIGHTS AND MINIMUM BREAKING STRENGTHS (POUNDS)

NOMINAL SIZE (Inches)		MANILA Fed. Spec. TR 605			NYLON (High Tenacity—H.T.)			DU PONT DACRON or H.T. POLYESTER			POLYOLEFINS (H.T.) (Polypropylene and/or Polyethylene)			DOUBLE NYLON BRAID			POLYESTER/POLYOLEFIN DOUBLE BRAID		
Dia.	Circ.	Net Wt. 100′	Ft. per lb.	Breaking Strength	Net Wt. 100′	Ft. per lb.	Breaking Strength	Net Wt. 100′	Ft. per lb.	Breaking Strength	Net Wt. 100′	Ft. per lb.	Breaking Strength	Net Wt. 100′	Ft. per lb.	Breaking Strength	Net Wt. 100′	Ft. per lb.	Breaking Strength
3/16	5/8	1.47	68	450	1	100	1,000	1.3	77	1,000	.73	137	750	NA	NA	NA	.75	133	900
1/4	3/4	1.96	51	600	1.5	66.6	1,700	2.1	47.5	1,700	1.24	80	1,250	1.66	60.3	2,100	1.7	60.2	1,700
5/16	1	2.84	35	1,000	2.5	40	2,650	3.3	30	2,550	1.88	53	1,850	2.78	36	3,500	2.6	38.4	2,600
3/8	1 1/8	4.02	25	1,350	3.6	28	3,650	4.7	21.3	3,500	2.9	34.5	2,600	3.33	30	4,200	3.5	28.5	3,500
7/16	1 1/4	5.15	19.4	1,750	5	20	5,100	6.3	15.9	4,800	3.9	25.5	3,400	5.0	20	6,000	5.1	20	5,100
1/2	1 1/2	7.35	13.6	2,650	6.6	15	6,650	8.2	12.2	6,100	4.9	20.4	4,150	6.67	14.9	7,500	6.8	15	6,800
9/16	1 3/4	10.2	9.8	3,450	8.4	11.9	8,500	10.2	9.8	7,700	6.2	16	4,900	8.33	12	9,500	NA	NA	NA
5/8	2	13.1	7.6	4,400	10.5	9.5	10,300	13.2	7.6	9,500	7.8	12.8	5,900	11.1	9	12,000	11	9	11,000
3/4	2 1/4	16.3	6.1	5,400	14.5	6.9	14,600	17.9	5.6	13,200	11.1	9	7,900	15.0	6.7	17,000	15	6.7	15,000
7/8	2 3/4	22	4.55	7,700	20	5	19,600	24.9	4	17,500	15.4	6.5	11,000	20.8	4.8	23,700	20	5	20,000
1	3	26.5	3.77	9,000	26	3.84	25,000	30.4	3.3	22,000	18.6	5.4	13,000	25.0	4	28,500	28	3.6	28,000
1 1/8	3 1/2	35.2	2.84	12,000	34	2.94	33,250	40.5	2.5	26,500	24.2	4.1	17,500	35.0	2.8	39,000	35	2.8	35,000
1 1/4	3 3/4	40.8	2.45	13,500	39	2.56	37,800	46.2	2.16	30,500	27.5	3.6	20,000	40.0	2.5	44,000	40	2.5	40,000
1 5/16	4	46.9	2.13	15,000	45	2.22	44,500	53.4	1.87	34,500	31.3	3.2	23,000	45.0	2.2	49,500	45	2.2	45,000
1 1/2	4 1/2	58.8	1.7	18,500	55	1.8	55,000	67	1.5	43,000	39.5	2.5	29,000	60.0	1.6	65,000	60	1.6	60,000

1 inch = 2.54 cm. 1 foot = 0.3048 m. 1 pound = 0.4536 kg.

NOTE:—The figures on synthetics, above, are an average of those available from four large cordage manufacturers. Those for the rope you buy should be availabe at your dealers. Check them carefully. Also check the rope. In general a soft, sleazy rope may be somewhat stronger and easier to splice but it will not wear as well and is more apt to hockle or unlay than a firm, well "locked-up" rope. Blended ropes, part polyolefins and part other fibers, may be found. Multifilament (fine filament) polypropylene looks like nylon—don't expect it to be as strong or do the job of nylon. (It floats, nylon doesn't.) Spun, or stapled, nylon and Dacron are not as strong as ropes made from continuous filaments but are less slippery and easier to grasp.

*Du Pont registered trademark.

(4) Securing aircraft. Tie only at the tiedown rings provided for that purpose. Never tie to a strut itself. The practice of tying to lift struts has in itself caused frequent damage. Ropes slip to a point when even slight pressure may bend the struts.

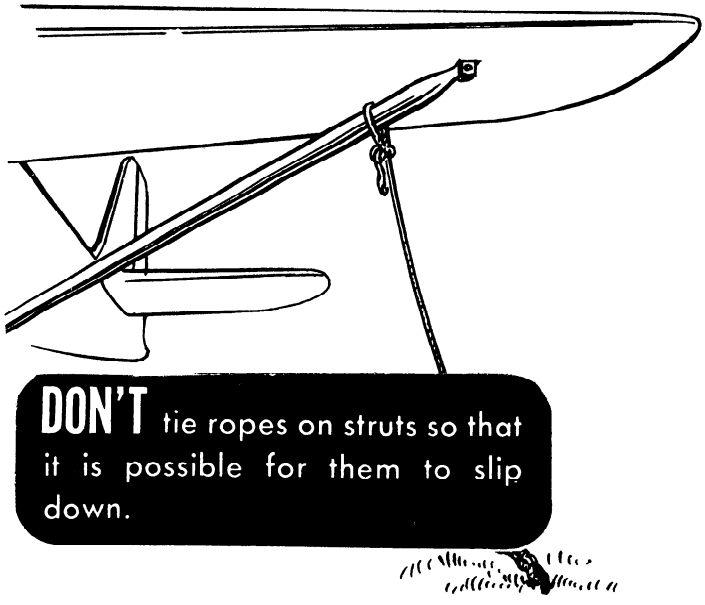

Allow for about 1 inch of movement, and remember that manila rope shrinks when it gets wet. Too much slack will allow the aircraft to jerk against the ropes. Avoid tightening the ropes too much. Tight tiedown ropes actually put inverted flight stresses on the aircraft, and many of them are not designed to take such loads. A tiedown rope holds no better than the knot. Antislip knots such as a bowline or a square knot are quickly tied, and easy to untie.

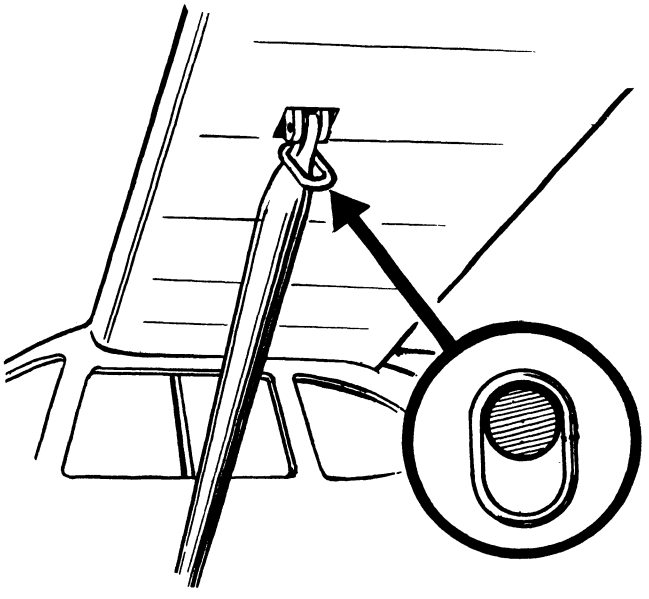

(See illustrations at the bottom of this page for tying knots.) Aircraft not equipped with tiedown fittings should have them installed in accordance with manufacturers' instructions.

DO tie ropes to outer ends of struts on high wing monoplanes. Provide suitable rings, where structural conditions permit, if manufacturer has not already provided them.

TYING A BOWLINE

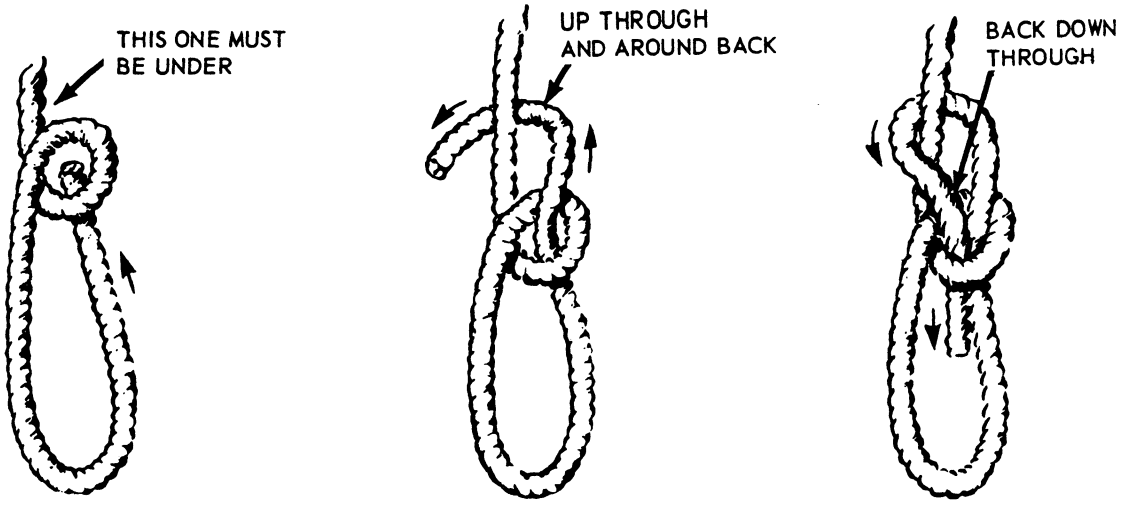

TYING A SQUARE KNOT

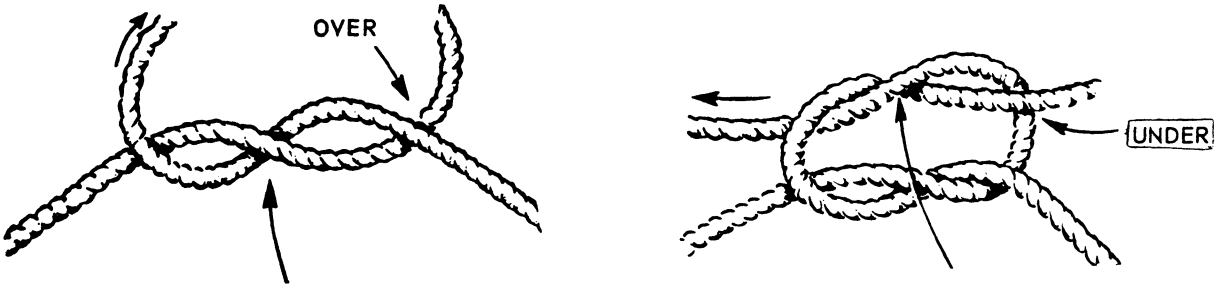

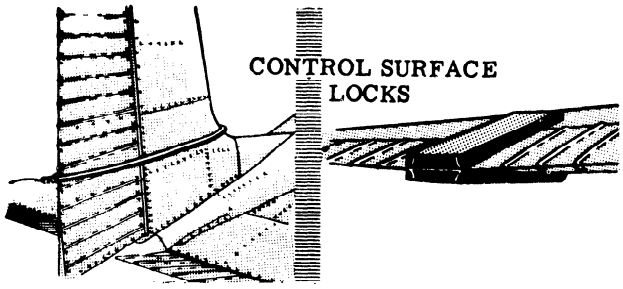

All flight controls should be locked or tied to prevent their banging against the stops. Some aircraft are equipped with integral gust locks operable from the cockpit. On others, it may be necessary to use external padded battens (control surface locks) or secure the control wheel and rudder pedals inside the cockpit. When using external surface locks, it is advisable that red streamers, weights, or a line to the tiedown anchor be fastened to the locks. This will provide a means of alerting airport service employees and pilots to remember to remove the external locks prior to takeoff. Secure ailerons and rudders in neutral. Tailwheel type aircraft headed into the wind should have their elevators secured in the "up" position by securing the control column or "stick". Tailwheel type aircraft "tailed" into the wind should have their elevators secured in the "down" position by securing the control column or "stick". Set and lock wheel brakes. Chocks should be placed and secured fore and aft each wheel. Wooden chocks may be secured by nailing a cleat from chock to chock on each side of each wheel. Ropes may be substituted if wood cleats are unavailable. A brick or piece of 2 x 4 are poor excuses for good chocks.

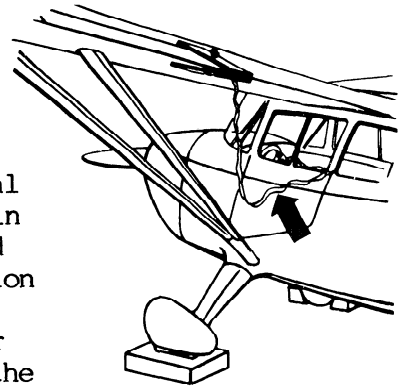

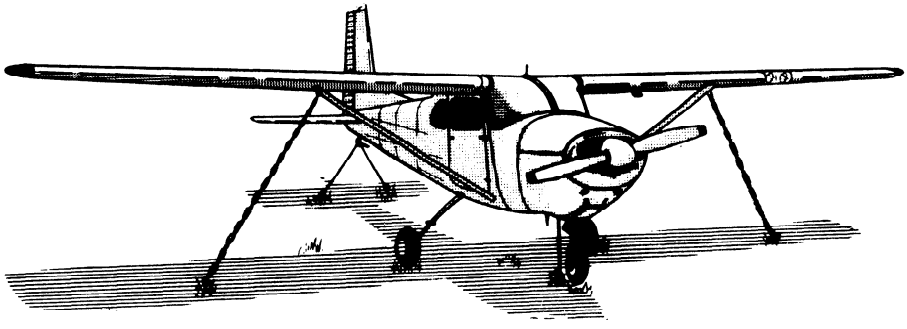

On tricycle gear aircraft, secure a tiedown line through the nosegear tiedown ring. In addition, secure the middle of a length of rope to the tiedown ring in the tail section. Pull each end of the rope away at a 45° angle and secure to ground anchors at each side of the tail. Elevators should be secured parallel to the ground (neutral position). It is good practice to also secure the flaps, especially if the aircraft is tailed into the wind.

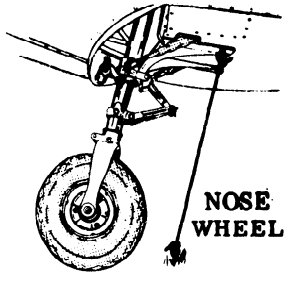

8. RECOMMENDED PRACTICES. The following practices are designed for day-in-day-out use regardless of the inconvenience they might entail. These practices are principally for protection of light and medium weight aircraft and result from experiences with the storms of the past. Adoption of the following recommendations should materially reduce aircraft damage from windstorms.

a. Partially disassembled aircraft which are outdoors, particularly light aircraft with engines removed, should be hangared as soon as storm warnings are received. Loose wings should never be tied against a fuselage; they should be stored inside a hangar.

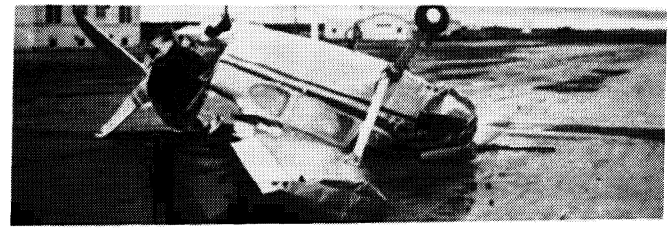

b. Wherever possible, fly aircraft out of anticipated storm danger zones. If possible, hangar the aircraft in a stormproof hangar.

c. The minimum recommended tiedown rope is one which will resist a pull of approximately 3,000 pounds. (Many users of plastic tiedown rope, yellow polypropylene, 1/2-inch and larger, reported little or no rope failure because of its elasticity. In some instances, nylon and hemp rope failed. In others, steel cables were snapped while hemp lines, due to their elasticity, held. In many cases, both hemp and steel cable tiedowns failed due to chafing.)

d. A single row of properly secured sandbags or 2x2's (spoiler boards) on the top of a wing's leading edge will serve as an effective spoiler and reduce the lifting tendency of the wings. Do not overload the wings with sandbags. If the anticipated winds will exceed the lift-off speed of the aircraft wings, then the makeshift spoilers should run the entire length of the wings. The 2x2 homemade spoiler is very easily constructed and may be used for all types of light aircraft. Drill a number of 3/8-inch holes across the length of the 2x2. Cement a strip of 1-inch foam rubber to the entire length of the 2x2. This will prevent damaging the wing's surface. Avoid nailing the foam rubber to the spoiler since the nailheads may damage the wing's skin.

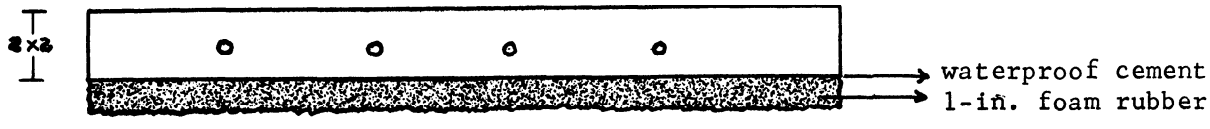

Thread a length of nylon rope through each of the drilled holes. To facilitate threading the nylon rope through the holes, it is suggested that the ends of the lines be seared. This will prevent fraying of the ends to be threaded through the 3/8-inch holes.

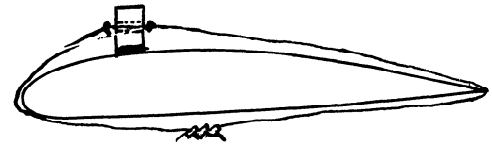

To prevent the spoiler from shifting position due to the wind, it is suggested that knots be tied in the rope on either side of the drilled holes. The spoiler should then be tied onto an aircraft's wings at the 25 percent chord point. To prevent damaging the wing's leading and trailing edges, it is suggested that a piece of foam rubber, or carpet, or even rags be placed under the nylon rope before tying. Some people may like to substitute bungee (elastic) cords for the long lengths of nylon rope.

e. Follow the manufacturer's tiedown instructions for each make and model aircraft.

9. ALTERNATE METHODS. Another means for tying down aircraft of various types and sizes is by utilizing continuous lengths of parallel wire ropes passed through U-bolt anchors and fastened at the ends of the line with wire rope clips. Tiedown chains are attached to the wire rope with roundpin galvanized anchor shackles. This allows the tiedown chains to "float" along the wire rope and gives a variable distance between anchor points so that a variety of large, medium, and small aircraft can use a vertical tiedown without loss of space. The vertical anchor significantly reduces impact loads that may occur during gusty wind conditions.

TYPICAL AIRCRAFT TIEDOWN USING A WIRE ROPE SYSTEM

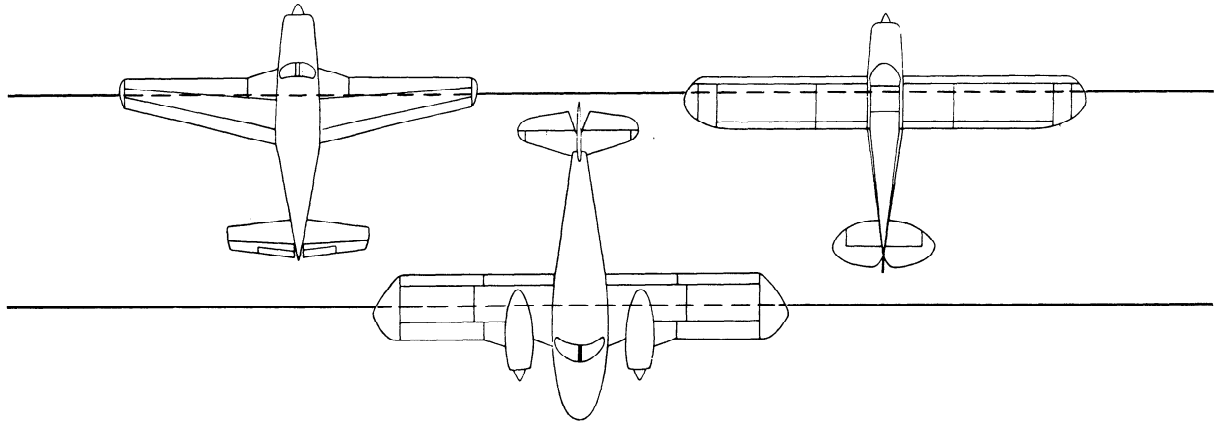

The distance between wire ropes will depend upon the types of aircraft which will use the tiedown area. This distance can vary from 22 feet and upward.

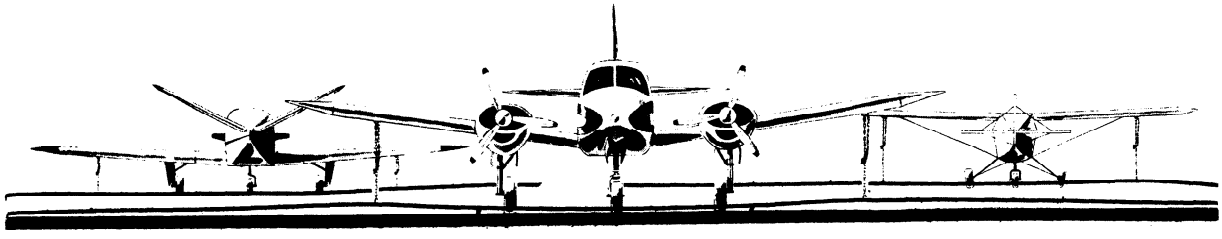

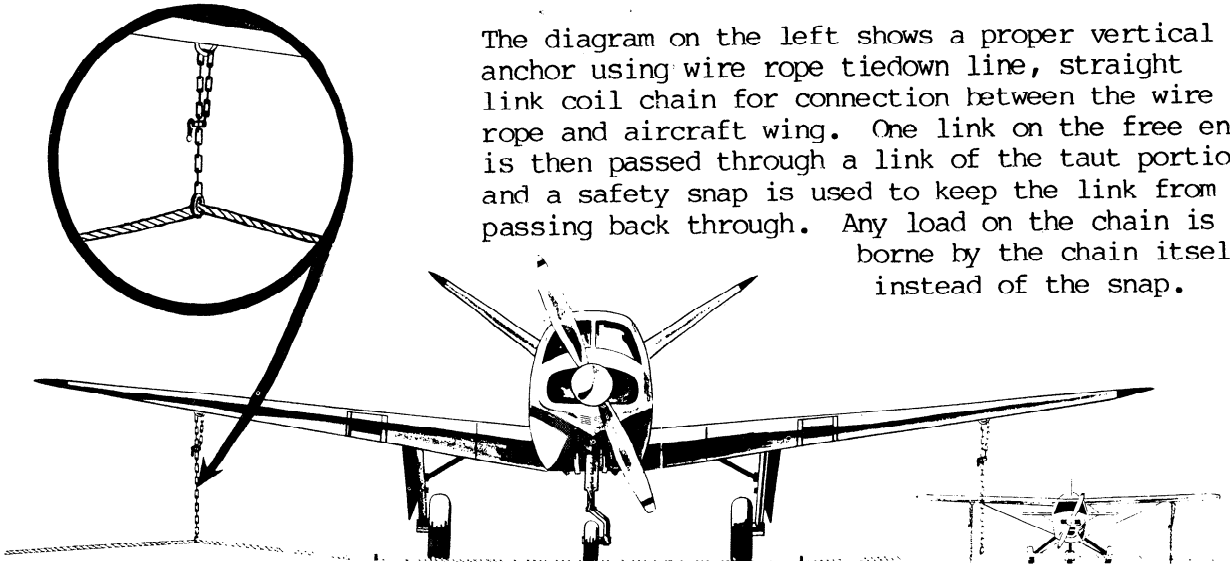

The diagram on the left shows a proper vertical anchor using wire rope tiedown line, straight link coil chain for connection between the wire rope and aircraft wing. One link on the free end is then passed through a link of the taut portion and a safety snap is used to keep the link from passing back through. Any load on the chain is borne by the chain itself instead of the snap.

Still another means of securing an aircraft is with tiedown cables, one at each wing and the third at the tail section. One end of a tiedown cable is secured with a snaphook to the tiedown anchor eye protruding above ground; the other end is hooked through the tiedown rings installed on the aircraft. Cable slack is taken up with an adjustable locking device.

10. SECURING MUTIENGINE AIRCRAFT. Multiengine aircraft will obviously require stronger tiedown facilities because of the additional weight of these aircraft. The anchors should be capable of a holding power of 4,000 pounds each for the lighter executive twin-engine aircraft. Much higher load capacity would be required for the heavier transport type aircraft. Do not depend on the multiengine aircraft's weight to protect it from damage by windstorms. It is quite possible for a sudden, severe windstorm to move, damage, or even overturn such aircraft.

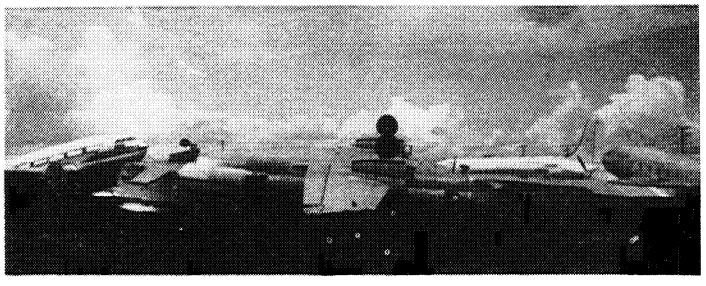

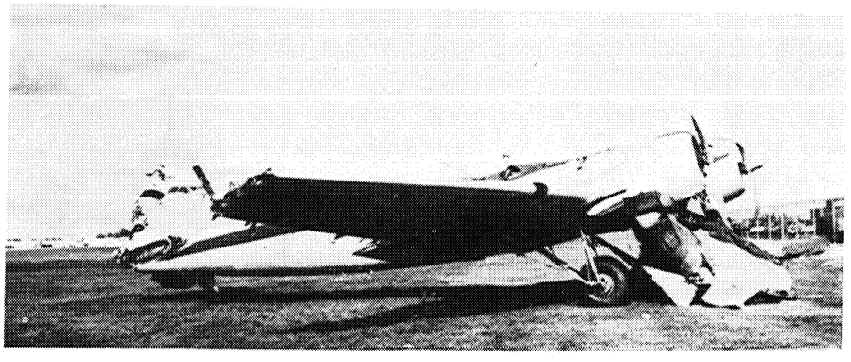

Multiengine aircraft should, therefore, always be tied down and chocked when they are to be left unattended for any length of time. Gust locks should be used to protect control surfaces. Be sure that gust locks are foolproof; a takeoff with gust locks on is not only embarrassing but could prove to be disastrous. If the landing gear makes use of the down lock safety pins, then these pins should be inserted when the aircraft is being secured.

11. SECURING HELICOPTERS. Structural damage can occur from high velocity surface winds. Therefore, if at all possible, helicopters should be evacuated to a safe weather area if tornado, hurricane, or winds above 65-75 mph are anticipated. If helicopters can be hangared, do so. If not, they should be tied down securely. Helicopters that are tied down properly can usually endure winds up to approximately 65-75 mph. Winds in excess of 75 mph will probably cause damage to helicopters. When high winds are anticipated, and helicopters are to be tied down, they should be secured as follows:

a. Head the helicopter in the direction from which the highest forecasted wind or gusts are anticipated.

b. Spot the helicopter slightly more than rotor-span distance from other aircraft.

c. Set and lock wheel brakes. Place wheel chocks fore and aft of all wheels (if available). Secure the chocks by nailing wood cleats from chock to chock on each side of each wheel. Ropes may be substituted if wood cleats are not available.

d. Position the main rotor blades and tie them down in accordance with the manufacturer's instructions.

e. Install a rotor blade cover over the tip of each main rotor. Secure a tiedown rope to each blade cover and the other end of the rope to the applicable mooring point on the helicopter. Remember not to leave too much slack and to use antislip knots when tying the mooring ropes.

f. Fasten the tiedown ropes to the fuselage mooring points and extend them to the ground mooring anchors. Provide sufficient slack and use antislip knots, such as square or bowline knots.

g. Place the tail rotor in a vertical position and install a cover over the lower blade tip. Tie the lower blade cover rope to the tail skid to prevent possible damage by flapping tail blades.

h. Close doors, windows, and exterior access panels.

i. Follow the manufacturer's instructions for each make and model helicopter.

SECURING HELICOPTER BLADES AND FUSELAGE

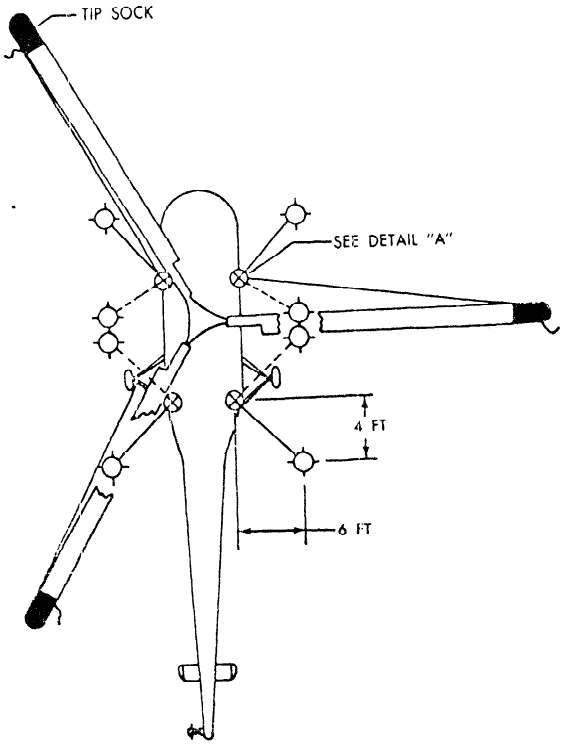

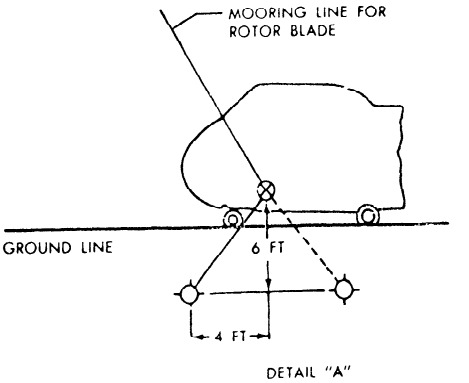

NOTE
MOORING POINT LOCATION FOR DEAD-MAN ANCHOR ON UNPAVED AREA. OPTIMUM TIEDOWN IS SHOWN BY DOTTED LINES.

GROUND MOORING ANCHOR

HELICOPTER MOORING POINT

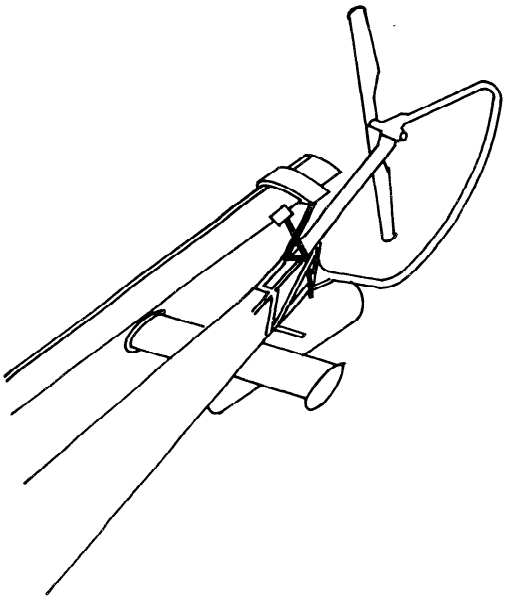

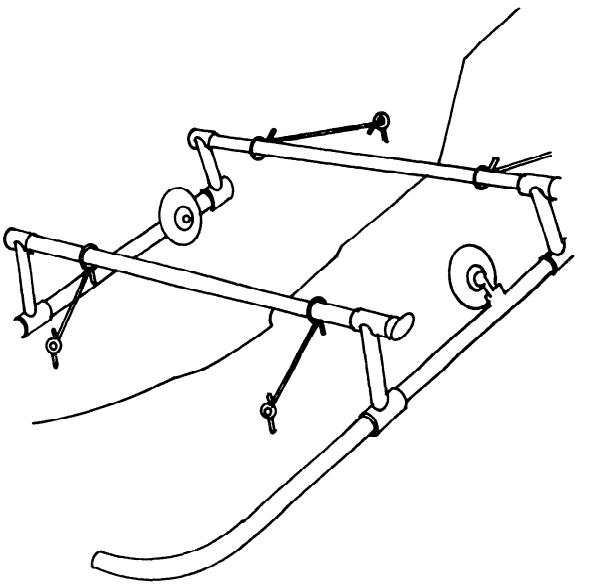

12. SECURING SEAPLANES AND AIRCRAFT ON SKIS. Aircraft mounted on floats or skis should be secured in the usual manner--to tiedown anchors or "deadmen" sunk under the water or ice. When warning of an impending storm is received, some pilots have been known to partially flood the floats of their aircraft, thereby partially sinking the aircraft. In addition, the aircraft is tied down securely to anchors. Seaplanes moored on land have been saved from high-wind damage by filling the floats with water in addition to tying down the wings. Pilots of ski-equipped aircraft sometimes pack soft snow around the skis, pour water on the snow, and permit the skis to freeze to the ice. Although the techniques mentioned in this paragraph are not recommended practices, they are cited here because they have proven effective in preventing damage from sudden windstorms. Extreme care must be taken to reverse the effects of any such measures prior to operation of the aircraft.

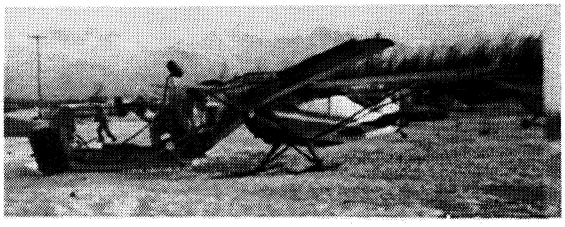

13. CONCLUSION. The simplest way to prevent windstorm damage to your aircraft is to fly it out of any impending storm area provided there is sufficient warning time. If that is impossible or impractical, shelter the aircraft in a stormproof hangar. Should this prove impossible, then tie your aircraft down securely. Aircraft parked outdoors should be tied down securely after each flight. Use the tiedown techniques discussed in this advisory circular. Learn to tie a bowline or a square knot during fair weather; do not wait until the wind and rain are adding to your difficulties. Should you desire additional information, we suggest that you contact the manufacturer for specific tiedown instructions for your aircraft.

M. C. Beard
Director of Airworthiness